EVERYTHING YOU NEED TO KNOW ABOUT YOUR XO

FIRE CENTERPIECE

I worked really hard on this manual - so please read it...

XO

XO
OUTDOOR LIVING

When buying any XO appliance
you can be confident you have chosen a
high quality, innovative and stylish product
from a company that cares about you!
If you require service or have questions,
Help is only a phone call away -
call: 973-403-8900
Talk to one of our appliance experts.

CONGRATULATIONS
on purchasing your XO.
Before you proceed, take just
a moment to register your XO at:

www.xoappliance.com/register-your-product/

REGISTRATION HELPS YOU BY -

Ensuring warranty coverage should you need service

Providing ownership verification for insurance purposes

Let's XO notify you in the event of product changes or recalls.

WHERE THINGS ARE

SAFETY FIRST General safety instructions Gas safety - natural gas Converting for use with propane Gas safety - propane	**5 - 9**
Set Up and Installation	**10**
Dimensions and Specifications	**11 - 15**
Assembly Drawing	**16**
Cleaning & Maintenance	**17**
Parts List	**18**
Trouble Shooting	**19**
Warranty	**20**

PLEASE READ AND FOLLOW
ALL SAFETY INSTRUCTIONS

It's for your
own good...
Honest.

THESE ARE THE MODELS COVERED IN THIS BOOK

FIRE CENTERPIECE

Natural Gas Standard
LP Conversion Kit Included

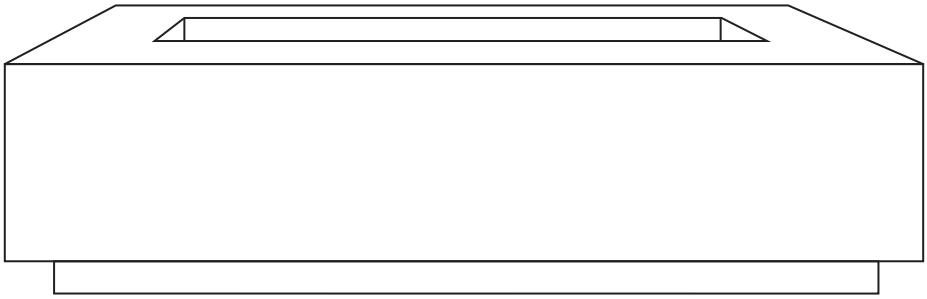

XOFBWL39__
XOFPOT24__
XORRND36__
XOFSQR3636__
XOFREC6032__

TAKE A MINUTE TO CIRCLE YOUR MODEL ABOVE
AND RECORD YOUR SERIAL NUMBER
HERE IN CASE YOU NEED IT LATER

YOUR SAFETY MATTERS

Please read through completely before using your XO Unit

WARNING
Do not store or use gasoline, or other flammable vapors and liquids, in the vicinity of this or any other appliance.

WARNING: FOR OUTDOOR USE ONLY

WARNING: POTENTIAL CARBON MONOXIDE HAZARD
This appliance can produce carbon monoxide which has no odor. Using it in an enclosed space can kill you. Never use this appliance in an enclosed space such as a camper, tent, car, or home.
Improper installation, adjustment, alteration, service or maintenance can cause injury or property damage. Read all installation, operating and maintenance instructions thoroughly before installing or servicing the equipment.

WARNING
Failure to follow instructions may result in fire or explosion, causing property damage, personal injury and/or loss of life. Refer to local professionals that are fully licensed properly to install gas appliances. Make sure your installer follows all local codes. This appliance should be serviced annually by a professional technician certified in the United States by National Fireplace Institute (NFI). Replacement burners and parts should be replaced by a trained, service professional using only factory original parts following manufacturer's guidelines. Failure to follow these guidelines may result in property damage, personal injury or death.
Your fire pit is configured to burn natural gas, it may be converted by a trained professional to burn propane. Verification of the type of fuel can be done by looking at the label on back side of burner. Never use any other alternative fuel sources.

CAUTION
Do not use charcoal or other solid fuel in gas burning appliances. Do not use your fire table for cooking. Do not heat any unopened glass or metal container of food in the fire table. Pressure may build up and cause the container to burst, possibly resulting in serious personal injury or damage to the fire table. Never use the fire table in windy conditions. If used in a consistently windy area a windbreak will be required.
Always adhere to the specified clearances listed in this manual.
Never allow clothing or other flammable materials to contact any hot surface until it has fully cooled. Never wear loose fitting or hanging garments while using your fire table. Fabric may ignite and result in personal injury. When handling propane gas line and connectors, do not allow them to contact any metal surfaces. Do not drop propane connectors.
NEVER use your fire pit as an incinerator to burn other materials.

GAS SAFETY | LIGHTING THE UNIT
1. Turn the ON/OFF valve located on the side of the fire table completely to the ON position.
2. Make sure fuel supply (LP or NG) is properly connected and turned on at the source. This will be either the LP tank or the NG valve.
3. When you hear gas flowing, use either a long stem wooden match or a butane fireplace lighter to place a flame near the burner.
4. If the burner does not light, does not stay lit, or the flame is very low, shut off the gas supply and wait five minutes to allow all fumes to clear. Start again from Step 1, making sure all gas valves are completely opened.

YOUR SAFETY MATTERS CONT.

GAS SAFETY | RE-LIGHTING

If the burner goes out, turn the gas to the off position and allow at least 5 minutes for any gas to dissipate before attempting to re-light. Once the gas has dissipated, light the unit following the manufacturer's recommendations.

Propane must always have a regulator. Do not operate if regulator has been removed.
Never leave the gas key in the valve when not in use.

BURN HAZARD

Never leave children without supervision. This appliance will reach high temperatures which will cause burns. Never leave any fire unattended when not in use. When using the appliance never touch the rock or glass used in the appliance. These areas get very hot and will cause injury. Do not reach over the fire feature when in use. Do not stand on any part of this appliance. Never allow children to sit on or near the appliance, this could cause personal injury. The rock bed and other portions of the appliance will remain hot enough to cause injury for some time after the flame is turned off. Do not leave the appliance unattended until it has had an opportunity to cool completely.

SAFETY

Inspections of this appliance should be done prior to installation and on an annual basis by a certified technician. Frequent cleaning may be required depending on the level of usage. It is important that the airflow inside the unit not be obstructed. It is the installers responsibility to review all safe operating and safety procedures with the end user. All manuals and product information sheet much be left with end user .

TURNING OFF GAS:

Natural Gas Units, turn the Key Gas Valve to the OFF position, then close the gas shut off valve.
Propane Units, turn the Key Gas Valve to the OFF position, then close the ON/OFF valve on the propane cylinder.

FOR YOUR SAFETY, READ BEFORE LIGHTING

Before lighting, check around the appliance area for the smell of gas. Propane is heavier than air and will settle close to the ground. Use only your hand to turn gas control valves.
Never use tools. If the valve will not turn by hand, do not try to repair it. Call a qualified service technician. Force or attempted repair may result in a fire or explosion.

NOTE: The propane tank regulator in this appliance is equipped with a low flow protection device. Unless the propane cylinder valve is slowly opened before the Key Gas Valve, the gas flow will be restricted resulting in a small flame.

CALIFORNIA PROPOSITION 65 WARNING

This product can expose you to Chromium, which is known to the state of California to cause cancer and birth defects or other reproductive harm. (For more information, go to www.p65warnings.ca.gov)

Serious injury, fire or death...
Okay -
You've got my attention!

GAS SAFETY | NATURAL GAS

Read this section before installation. It explains what you need to know about liquid propane & natural gas prior to setting up your fire feature.

NATURAL GAS

Ensure that the service supplying the fire feature is fitted with a positioned shut off valve that is easily accessible. Use a recommended 3/4" ID supply line.

REQUIREMENTS

Always check the rating plate to make sure the gas supply you are connecting is the gas type for the manufactured fire feature. The installation of this appliance must conform with local codes or, in the absence of local codes, to the National Fuel Gas Code, ANSI 2223.1, NFPA 54; National Fuel Gas Code; Natural Gas and Propane Installation Code, CSA 8149.1; or Propane Storage and Handling Code, CSA 8146.2 as applicable. Natural gas connection must be performed by a licensed contractor or local gas company representative.

SUPPLY PRESSURE

MINIMUM: 4.0" W.C.
MAXIMUM: 6.0" W.C.

PRESSURE TESTING

If the fire feature is installed with a fixed fuel piping system and equipped with an appliance gas pressure regulator, the fire feature and its individual shut-off valve must be disconnected from the gas supply piping system during any pressure testing of the system at test pressure in excess of 1/2psi (3.5 kPa}.

The fire feature must be isolated from the gas supply piping system by closing its individual manual shut off valve during any pressure testing of the gas supply piping system at test pressures equal to or less than 1/2psi (3.5 kPa}.

ALL CONNECTIONS REGARDLESS OF FUEL TYPE MUST BE LEAK TESTED PRIOR TO USE.

CONVERSION TO BURN PROPANE

Converting the unit to use propane as a fuel requires exchanging the burner oriface, which can only be done by a trained, qualified technician.
After changing the oriface on page 8 - follow the propane connection instruction on page 9.

CONT.

CONVERTING NATURAL GAS TO PROPANE

THIS CONVERSION CAN ONLY BE COMPLETED BY A LICENCED, INDUSTRY PROFESSIONAL

Before beginning, the unit must be completely disconnected from any gas supply.

You will need: One (1) XOFLPKIT, conversion kit, included*
Adjustable wrench
Pipe Dope
Soapy water solution to test for leaks

* Kit packed inside fire pit

1. Tilt the burner plate up to reveal the gas connections

2. Disconnect the flare fitting below the brass orifice from from the flex tube.

3. Unscrew the brass orifice from the pipe going up to the burner.

4. Apply a thin layer of pipe dope to the threads - Be careful not to get pipe dope inside the pipe.

5. Thread on the new brass orifice supplied with the XOFLPKIT onto the pipe nipple and tighten with the wrench.

6. Attach the flex tube removed in step 2 to the flare fitting and tighten with the wrench. (DO NOT USE PIPE DOPE on flare fittings)

7. Feed the 10' regulator hose from the LP tank through the hole provided in the base of the unit and connect the flair fitting to the gas valve tightening it with the wrench.

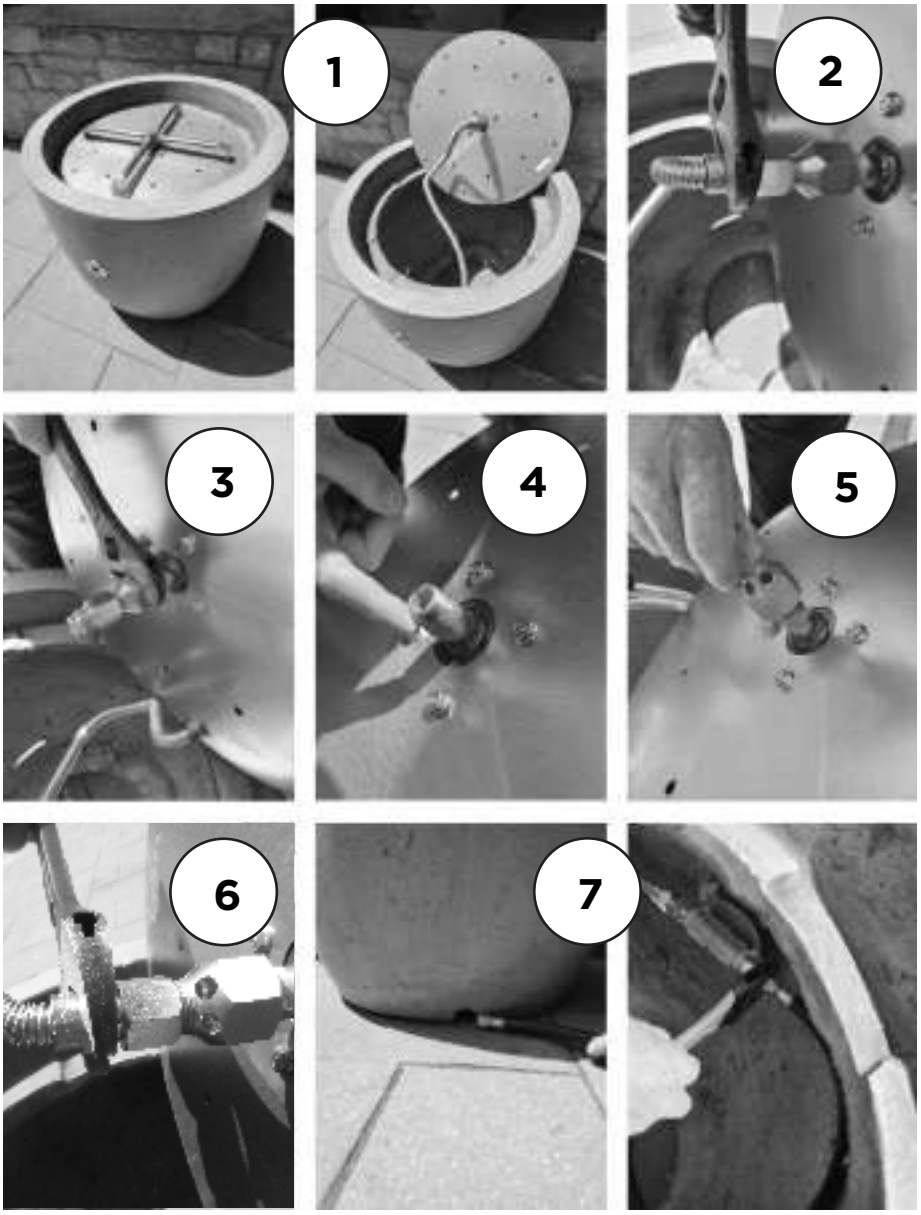

Before replacing the burner plate the system must be checked to ensure all fittings are leak tight.

GAS SAFETY | PROPANE

LIQUID PROPANE
Your fire feature is not provided with a propane tank. You will need to provide one. Use the following specifications for purchasing your propane tank.

SPECIFICATIONS
The 20-lb. propane gas supply cylinder is constructed and marked in accordance with the specifications for propane gas cylinders as required by the U.S. Department of Transportation (DOT}.

MANIFOLD PRESSURE
For plumbed-in liquid propane installation, use a regulator.

SUPPLY PRESSURE
Maximum line pressure for plumbed-in propane is 14″ W.C. psi (3.5 kPa}.
Minimum line pressure for propane is 11″ W.C.

PRESSURE REGULATOR
The unit must be used with the supplied gas pressure regulator and hose assembly. The regulator will control and maintain a uniform gas pressure in the manifold. The burner orifice has been sized for the gas pressure delivered by the regulator. Replacement pressure regulator and hose assemblies must be those specified in the instructions.

CYLINDER SPECIFICATION
Any propane gas supply cylinder used with this fire feature must be approximately 12″ in diameter and 18″ high. The maximum fuel capacity is 20 lbs. of propane or 5 gallons. Full cylinder weight should be approximately 38 lbs. Always use the cylinder dust cap on the cylinder valve outlet during transport and when the cylinder in not connected to the fire feature. The 20-lb. propane gas cylinder used must include a collar to protect the cylinder valve.

FILLER VALVE
If you do not have an updated filler valve on your existing propane tank, you will need to purchase one at your local hardware store, otherwise you will not be able to refill the propane tank at the refill station.

TRANSPORTING GAS CYLINDER
Only one cylinder should be transported at a time. Be sure that the cylinder is secure and transported in an upright position with the control valve turned off.

STORAGE OF CYLINDERS
Store propane cylinders with the dust caps tightly installed outdoors in a well ventilated area out of reach of children.

ALL CONNECTIONS REGARDLESS OF FUEL TYPE MUST BE LEAK TESTED PRIOR TO USE.

SET-UP AND INSTALLATION

1. Carefully place the fire pit in the final designated area. See below for lifting instructions.

2. Your fire pit will arrive with the burner and burner plate set in the unit. You will need to lift up the plate to access the gas inlet.

Natural Gas Installation
a. The gas line between the burner and the gas valve located on the side of the fire bowl has already been connected at the factory.
b. You will then connect the flex line hose from the plumbed gas line to open gas valve.

Propane Installation
a. The gas line between the burner and the gas valve located on the side of the fire bowl has already been connected at the factory.
b. Then connect the propane hose from the gas valve to the propane tank.

3. After all gas connections have been secured and checked by a licensed plumber or contractor, place burner pan in final locations on top of concrete ring that sits in the fire bowl.

4. Test burner unit before adding lava stone or glass in unit.

5. After you have completed all the plumbing installation, fill the fire bowl with the lava rock provided. You can place the lava rock on the burner, but not more than 1" thick.

Excessive filler material can impede gas flow causing gas build-up and a potential explosive hazard.

CAUTION: The product is EXTREMELY HEAVY, TEAM LIFT and use equipment dollies to transport. Transport the unit BASE DOWN or resting on it's side. DO NOT use wheelbarrows or handtrucks. Gently place the unit in it's final position.

DO NOT use wheelbarrows or handtrucks.

LOCATING YOUR UNIT:

In placing your fire pit - consider prevailing wind patterns.
If used in a consistently windy area a windbreak will be required.
Always adhere to the specified clearances listed in this manual.

Sides & Back.....36 inches (122 cm)
Top.....84 inches (305 cm)

These units generate tremendous heat - keep the area clear of materials which may ignite, melt or be deformed by heat.

DIMENSIONS XOFREC6032__

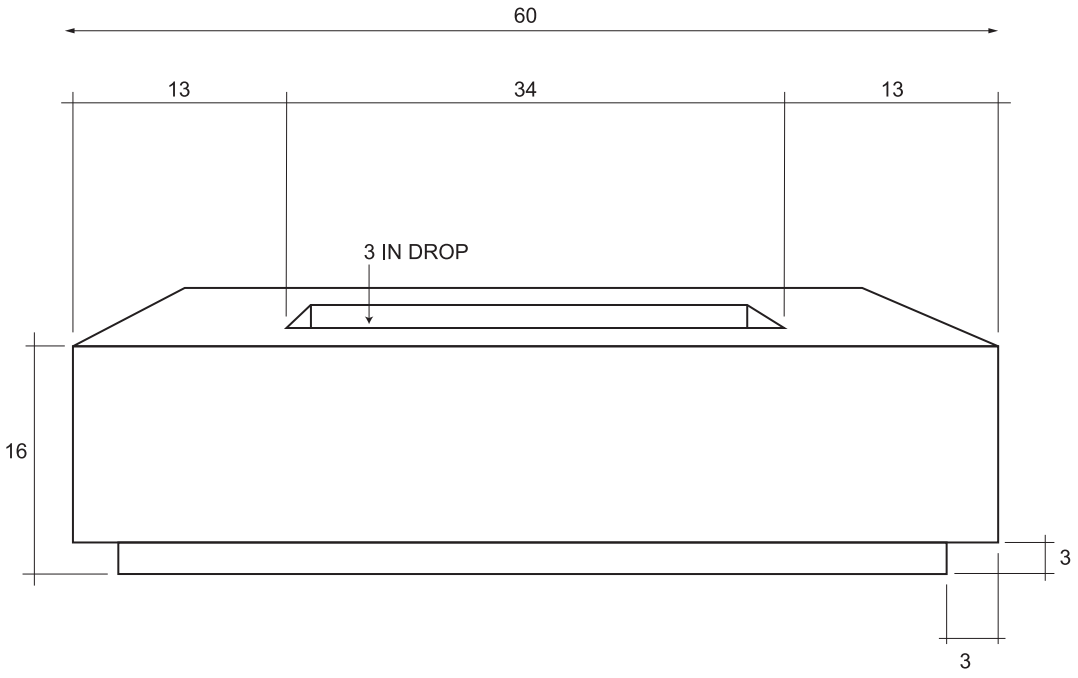

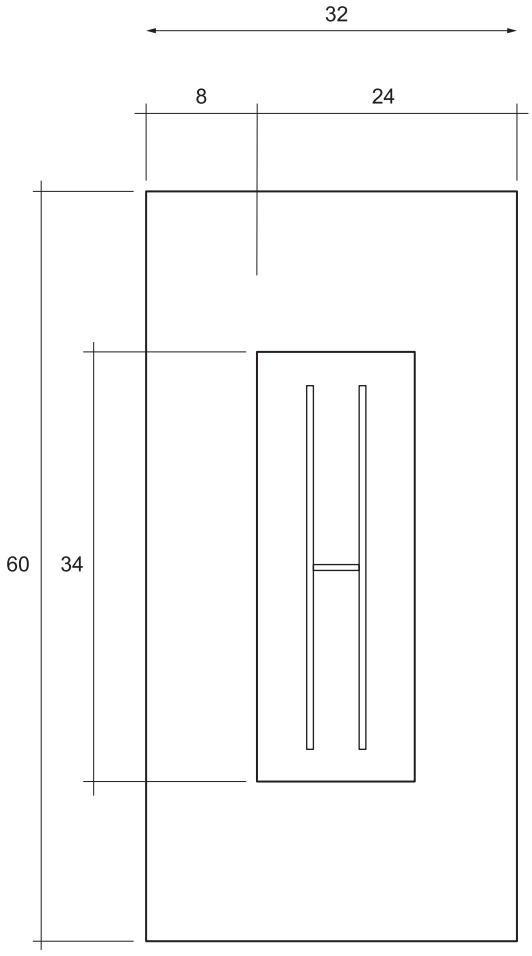

SPECIFICATIONS	
Width	32”
Length	60”
Height	16”
Burner Output	65,000 BTUs
Weight	320 lbs
Fuel	NG Standard (incl LP conversion kit)
Ignition	Manual (w Key Valve)
Material	GFRC - Glass Fiber Reinforced Cement

DIMENSIONS XOFSQR3636__

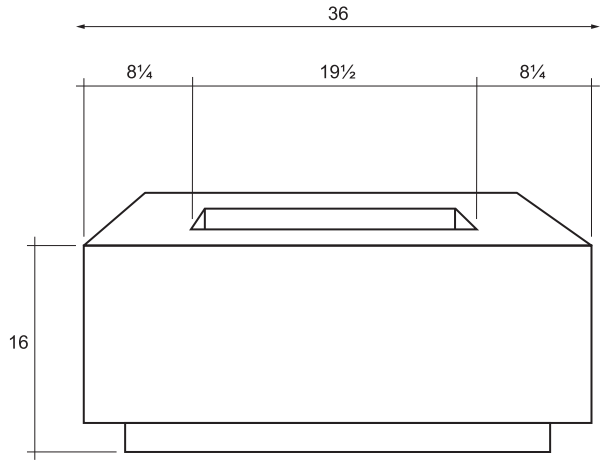

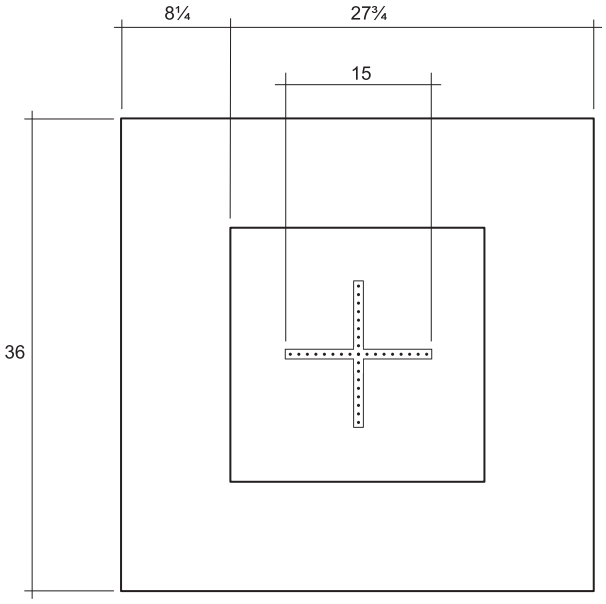

SPECIFICATIONS	
Width	36”
Length	36”
Height	16”
Burner Output	65,000 BTUs
Weight	240 lbs
Fuel	NG Standard (incl LP conversion kit)
Ignition	Manual (w Key Valve)
Material	GFRC - Glass Fiber Reinforced Cement

DIMENSIONS XOFRND36__

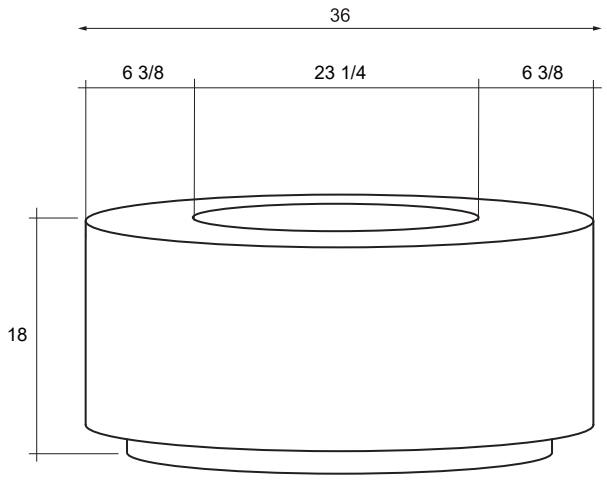

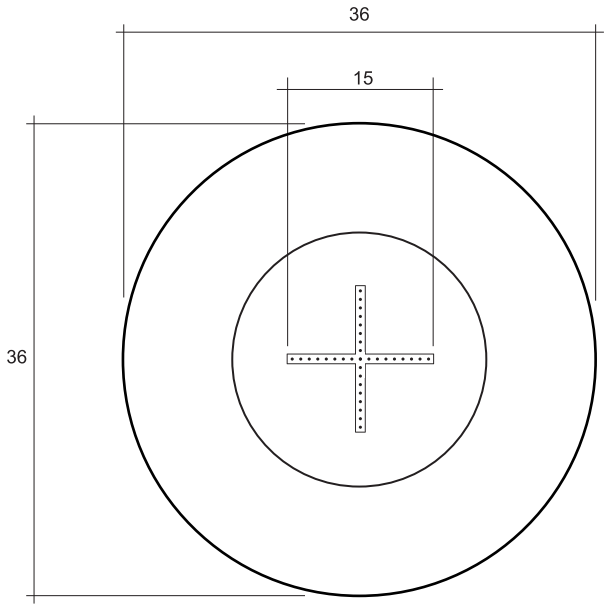

SPECIFICATIONS	
Width	36”
Length	36”
Height	18”
Burner Output	65,000 BTUs
Weight	240 lbs
Fuel	NG Standard (incl LP conversion kit)
Ignition	Manual (w Key Valve)
Material	GFRC - Glass Fiber Reinforced Cement

DIMENSIONS XOFBWL3914

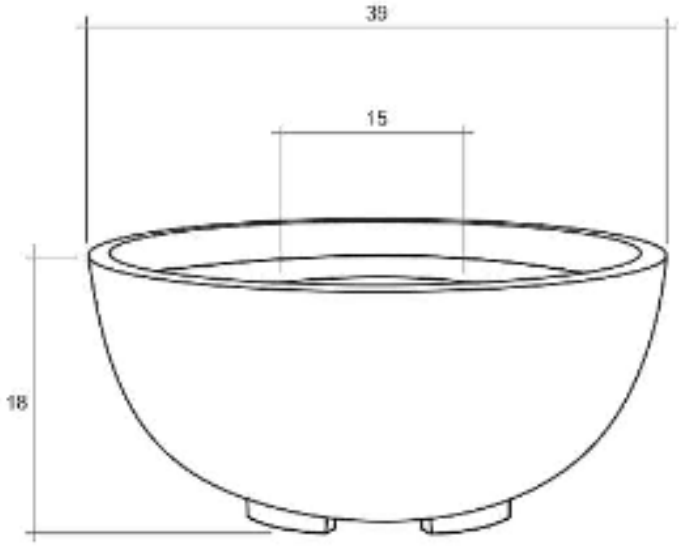

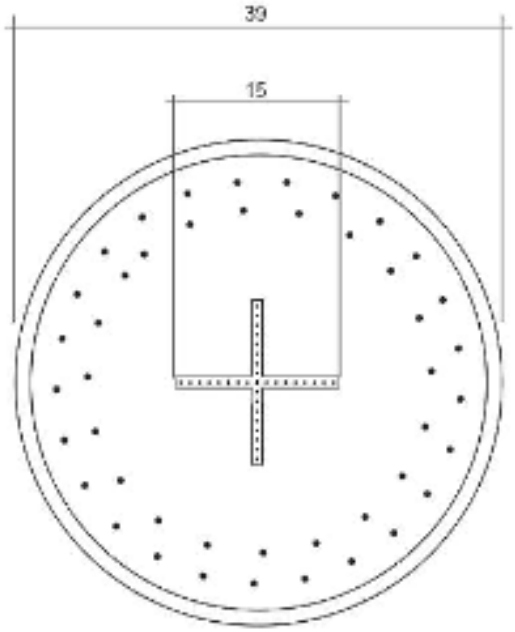

SPECIFICATIONS	
Width	39”
Length	39”
Height	18”
Burner Output	65,000 BTUs
Weight	210 lbs
Fuel	NG Standard (incl LP conversion kit)
Ignition	Manual (w Key Valve)
Material	GFRC - Glass Fiber Reinforced Cement

DIMENSIONS XOFPOT24__

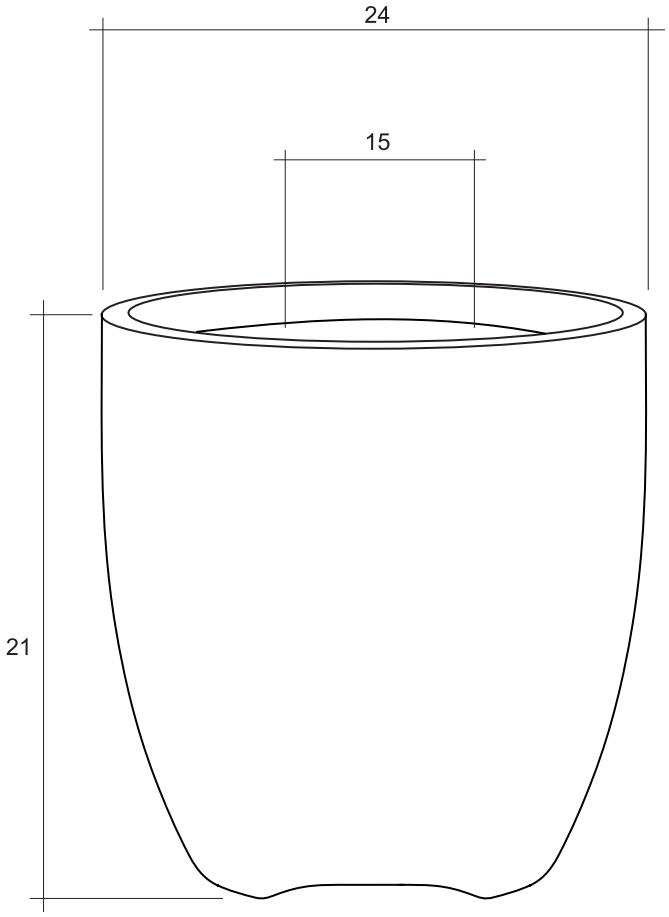

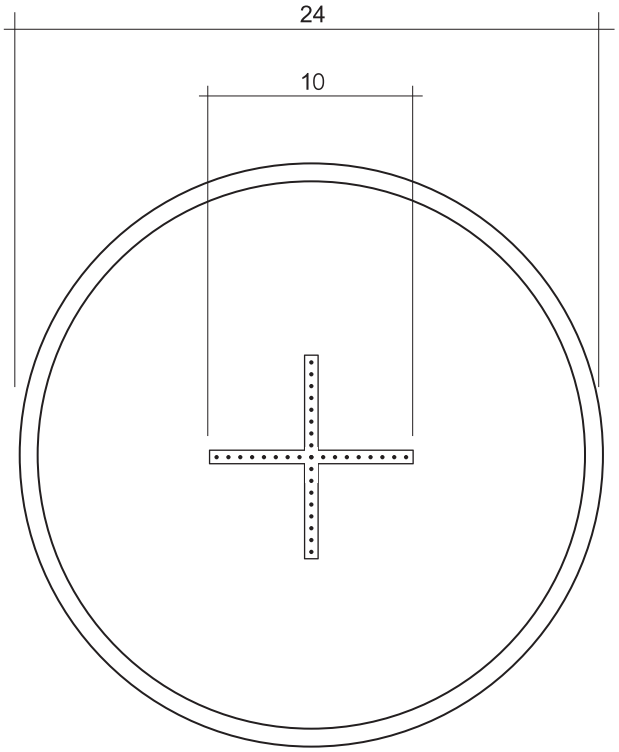

SPECIFICATIONS	
Width	24”
Length	24”
Height	21”
Burner Output	65,000 BTUs
Weight	125 lbs
Fuel	NG Standard (incl LP conversion kit)
Ignition	Manual (w Key Valve)
Material	GFRC - Glass Fiber Reinforced Cement

ASSEMBLY DIAGRAM

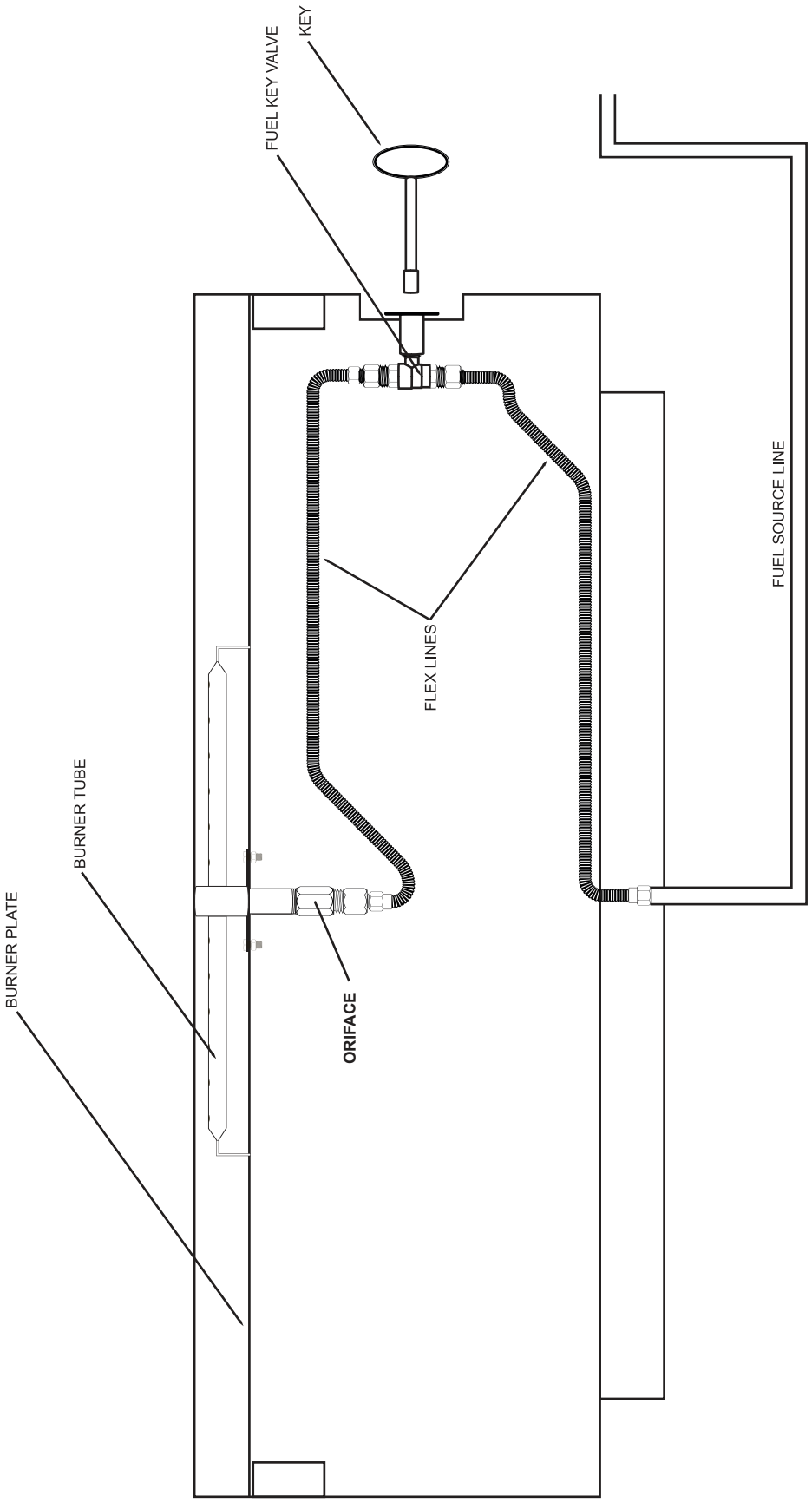

CLEANING & MAINTENANCE

CLEANING

Inspect the appliance before initial use. Clean the appliance at least annually and have it inspected by a qualified field service person. Periodically examine the burner. If the burner is dirty, clean it with a soft wire brush. The easiest way to clean the fire table burner is to let it cool completely and spray the enclosure off with water. DO NOT spray water directly onto the burner. For routine cleaning of the fire table, wipe down with a damp cloth or sponge. Avoid cleaners which may contain chemicals that could cause discoloration. To remove stains, use a Marble or Granite stain remover available at any home center. More frequent cleaning may be required as necessary. It is imperative the burner and ventilation passages of the unit be kept clean and unobstructed. When not in use and after cooling, cover your fire table with a full length cover. A cover will help protect your fire table from harmful effects of weather and pollution. Before covering the fire table, make certain the unit is shut off, has cooled completely and the gas lines have been disconnected. Install the cover and secure it tightly to prevent wind from blowing it off.

MAINTENANCE

Periodically check the hose connecting the propane gas cylinder to ensure it is not cracked or damaged in any way. All natural gas hook-ups should be inspected and serviced by qualified installers only.

BURNER CLEANING

Once a year or if flames exhibit any abnormal shapes or behavior, or if the burner fails to ignite properly, the burner holes may require cleaning. The appliance can be cleaned by carefully removing the media to allow access to burner. Use a brush to carefully remove dust, webs, and loose particles from base, stones, and the burner. If there are signs of damage, the burner must be replaced with factory original parts as specified by the manufacturer. Spiders and insects can nest in the burners blocking gas and airflow to the burner ports. This creates a dangerous condition that can result in a fire. Inspect and clean the burners periodically. Any parts removed for servicing must be properly replaced prior to operating the appliance. If there is excessive abrasion or wear of any of the components, if the fuel supply hose is cut or cracked, it must be replaced before operating the appliance. Inspect the fuel supply connection for signs of leakage (including the hose for propane models) before each use of the appliance. Repair or replacement of any part of your fire table must be done by a qualified technician perform all service. Any repairs made by unauthorized service technicians will void your warranty.

STORAGE

When your fire table is not in use, turn off the gas at the source. Fire pits can be stored indoors only if they have been disconnected from their fuel supply. Store propane cylinders outdoors in a well-ventilated area out of reach of children. Disconnected cylinders must have threaded valve plugs tightly installed and must not be stored in a building, garage, or any other enclosed area. To extend the life of your fire table, protect and cover it when not in use. Ensure the appliance has ample time to cool off after use and prior to installing storage cover. Damage caused to storage cover due to heat or burns are not covered by warranty. We suggest that our products be serviced by a professional certified in the US by the National Fireplace Institute (NFI) as NFI Gas Specialists

It is the installer's responsibility to ensure a safe installation and to educate the end user as to proper operation of the burner unit. Installer must leave the owner's manual, metal plate with operating instructions, and valve key with the end user.

TROUBLESHOOTING

ISSUE	POSSIBLE CAUSES	REMEDY
Will not light	Air in gas line	New installations may require several starts to clear the lines
	Debris in gas line	Confirm line is clear
	Incorrect gas pressure	Confirm proper pressure
Will not stay lit	Incorrect gas pressure	Confirm proper pressure
	Media blocking burner	Review operation instructions regarding lava rock/media placement
Noise	Restricted air/gas flow	Remove any tight bends or kinks in the gas supply line
	Excessive gas pressure	Check and reset gas pressure regulator as necessary
Smoking	Poor fuel quality	Contact local gas company
	Media impeding gas flow	Separate media to improve gas passage
	Improper gas/air mixture	Remove any foreign material from the flame pattern | check oriface size
Flame too high or low	Incorrect gas supply or pressure	Confirm proper pressure
	Blocked burner orifice or ports	Remove any debris or blockage
	Incorrect orifice size	Verify correct orifice size
Odor	Gas leak	Check for and seal all leaks

POPULAR ACCESSORIES

PROPANE TANK ENCLOSURES

XOFSQRENC20__ Square

XOFRNDENC20__ Round

ALL WEATHER COVERS

XOFCOVERBWL39 Fire Bowl 39in Cover

XOFCOVERPOT24 Fire Pot 24in Cover

XOFCOVERREC60 Fire Pit 60in x 32in Cover

XOFCOVERRND36 Fire Cylinder 36in Cover

XOFCOVERSQR36 Fire Square 36in Cover

FIRE MEDIA

XOFLAVA50LBS Cracked Lava Rock 50lbs

XOFROCK50LBS Tumbled Rock 50 lbs

WE'VE GOT YOUR BACK

TWO YEAR PARTS & LABOR LIMITED WARRANTY. XO warrants to the original purchaser of every new XO Fire Pit unit and all parts thereof, to be free from structural defects in material or workmanship under normal and proper use and maintenance as specified by XO and upon proper installation and start-up in accordance with the instruction packet supplied with each XO unit. XO's obligation under this warranty is limited to a period of two (2) years from the date of original purchase.

TERMS APPLICABLE TO EACH WARRANTY. Any part covered under the above warranties that is determined by XO to have been defective within the time frame is limited to the repair or replacement, including labor charges, of defective parts or assemblies. The labor warranty shall include standard straight time labor charges only and reasonable travel time, as determined by XO.
WARRANTY CLAIMS. All claims for labor or parts must be made directly through XO. All claims should include: model number and serial number of cabinet, proof of purchase, and date of installation. In case of warranted compressor, the compressor model tag must be returned to XO along with the above listed information.
WHAT IS NOT COVERED BY THIS WARRANTY. XO's sole obligation under this warranty is limited to either repair or replacement of parts, subject to the additional limitations below. This warranty neither assumes nor authorizes any person to assume obligations other than those expressly covered by this warranty. Open box, factory seconds, scratch and dent, floor models, models with missing, altered or obscured serial numbers and commercial applications are excluded from these warranties. Consumer shall be responsible for labor and transportation costs where noted above.
NO CONSEQUENTIAL DAMAGES. XO is not responsible for economic loss, profit loss; or special, indirect or consequential damages, including without limitation, losses or damages arising from product failure.
WARRANTY IS NOT TRANSFERABLE. This warranty is not assignable and applies only in favor of the original purchaser/user at the original installation location. Any such assignment or transfer shall void the warranties herein made and shall void all warranties, express or implied, including any warranty or merchantability or fitness for a particular purpose.
IMPROPER USAGE. XO assumes no liability for parts or labor coverage for component failure or other damages resulting from improper usage or installation or failure to clean and/or maintain product as set forth in the warranty packet provided with the unit.
ALTERATION OR NEGLECT. XO is not responsible for the repair or replacement of any parts that XO determines have been subjected after the date of manufacture to alteration, neglect, abuse, misuse, accident, damage during transit, improper installation, lack of scheduled maintenance as outlined in this manual, fire, flood, or act of God.
SERVICE CONNECTIONS. XO is not responsible for the repair or replacement of failed or damaged components due to improper or insufficient utility service connections.
YOUR RIGHTS UNDER STATE LAW. This warranty gives you specific legal rights and you may have other rights that vary from state to state. Some states do not allow the exclusion or limitation of consequential damages or a limitation on how long an implied warranty lasts, so the above exclusion or limitation may not apply to you.
OUTSIDE U.S. This warranty does not apply to, and XO is not responsible for, any warranty claims made on products sold or used outside the 48 continental United States.

To obtain service:

Call 973-403-8900 |email service@xoappliance.com | or submit a request on our website www.xoappliance.com

IMPORTANT NOTE: EACH FIRE PIT IS UNIQUELY HAND FINISHED:

The original purchaser acknowledges and agrees that this product is a handmade, hand-finished product. Each piece is unique. Any samples provided are typical of texture, finish, individual characteristics, and color but they should not be considered exact representations of the final product. There can be a variation in color and texture from piece to piece. The texture created by entrapped air ranges from smooth to randomly indented. Minor chipping, water staining, and non-structural hairline cracks are also traditional characteristics of this product. As with natural stone, color will vary on individual orders and among individual pieces in the same order. As with natural stone, excessive heat exposure may cause discoloration. As fire tables age, color may lighten or darken according to specific field or storage conditions such as humidity, temperature, and exposure to sunlight.

2 YEAR
PARTS + LABOR
WARRANTY