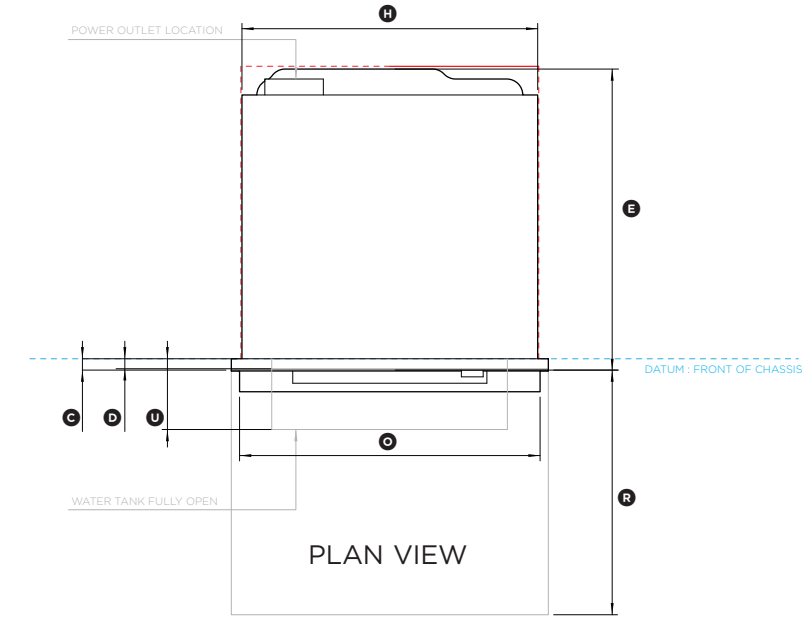

PLAN VIEW

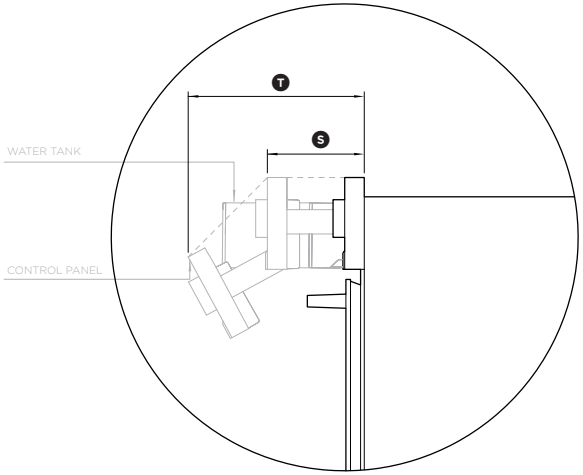

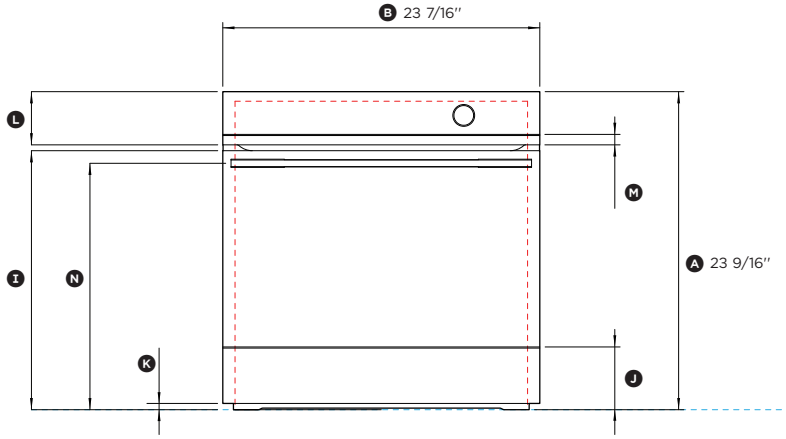

FRONT VIEW

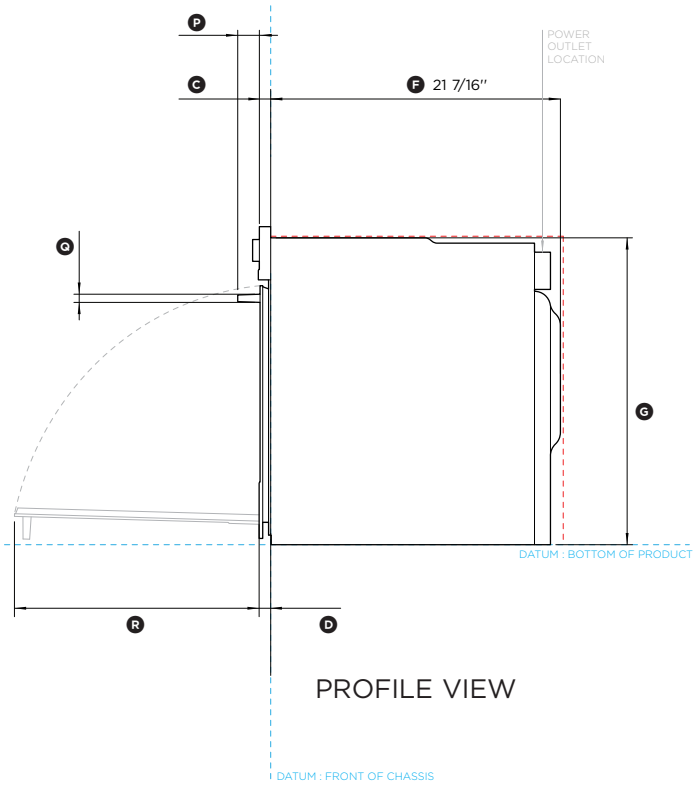

PROFILE VIEW



FISHER & PAYKEL

DATA SHEET
24" Oven

Model no:
OS24SDTDB1
(refer page 2 for metric measurements)

Product Dimensions	**in**
(A) Overall height of oven	23 9/16"
(B) Overall width of oven	23 7/16"
(C) Depth of control panel (excludes handle and front metal trim)	13/16"
(D) Depth of front door (excluding front trim)	13/16"
(E) Depth of oven chassis to front of door glass (excludes handle)	22 1/4"
(F) Depth of chassis	21 7/16"
(G) Height of chassis	22 3/4"
(H) Width of chassis	21 7/8"
(I) Height from bottom datum to top of oven door	19 3/16"
(J) Height of metal cap on oven door	4 5/8"
(K) Height from bottom datum to bottom of door	7/16"
(L) Height of control panel	3 15/16"
(M) Height of metal cap on control panel	13/16"
(N) Height from bottom datum to centerline of handle	18 1/4"
(O) Width of handle	22 1/4"
(P) Depth of handle (measured from front of door)	1 5/8"
(Q) Thickness of handle	5/8"
(R) Depth of door (open) (measured from front of door)	18 1/8"
(S) Control panel half open (measured from front of chassis)	3 5/16"
(T) Control panel fully open (measured from front of chassis)	6 11/16"
(U) Water tank carriage fully open	5 1/4"

Minimum Clearances	**in**
Minimum inside height of cavity	22 7/8"
Minimum inside width of cavity	22 1/16"
Minimum inside depth of cavity	21 11/16"

INDICATES PRODUCT DATUM ----------
INDICATES CABINETRY CLEARANCES ----------

DATE: **17.11.2021**

IMPORTANT NOTE: Throughout this guide, dimensions may vary by ±2mm (1/16"). Please read the installation manual for detailed information on installing the product. For full installation instructions & specifications visit fisherpaykel.com

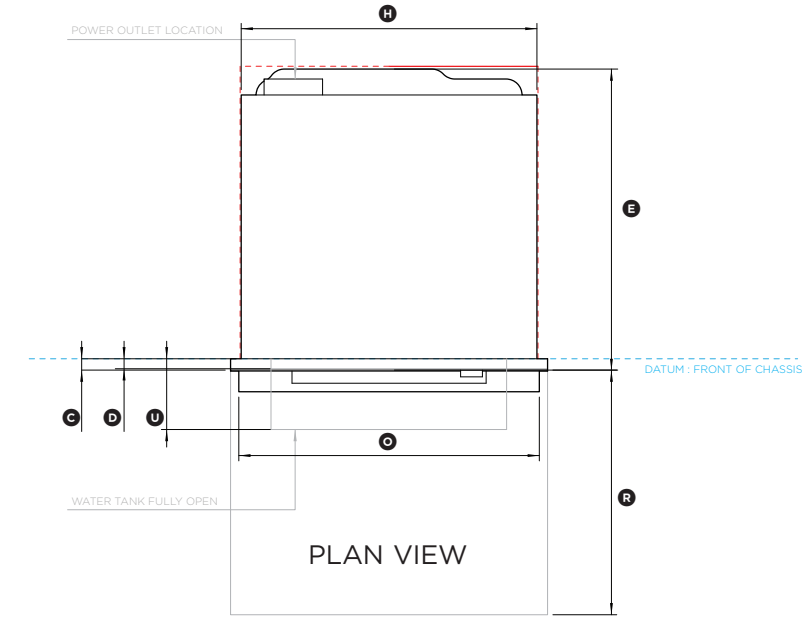

PLAN VIEW

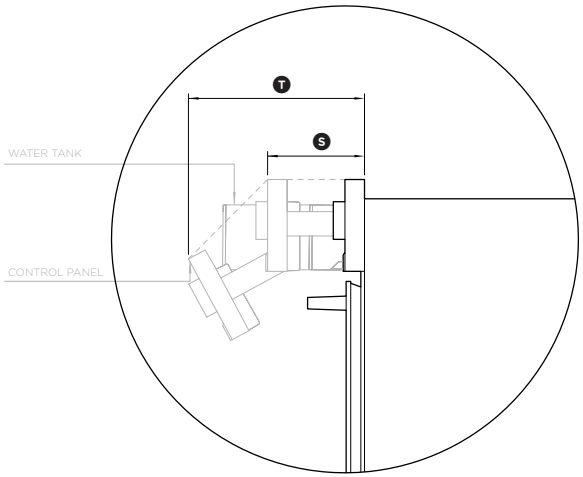

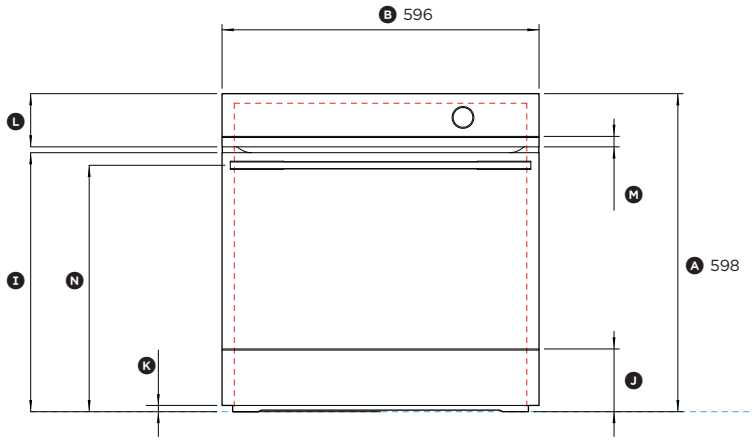

FRONT VIEW

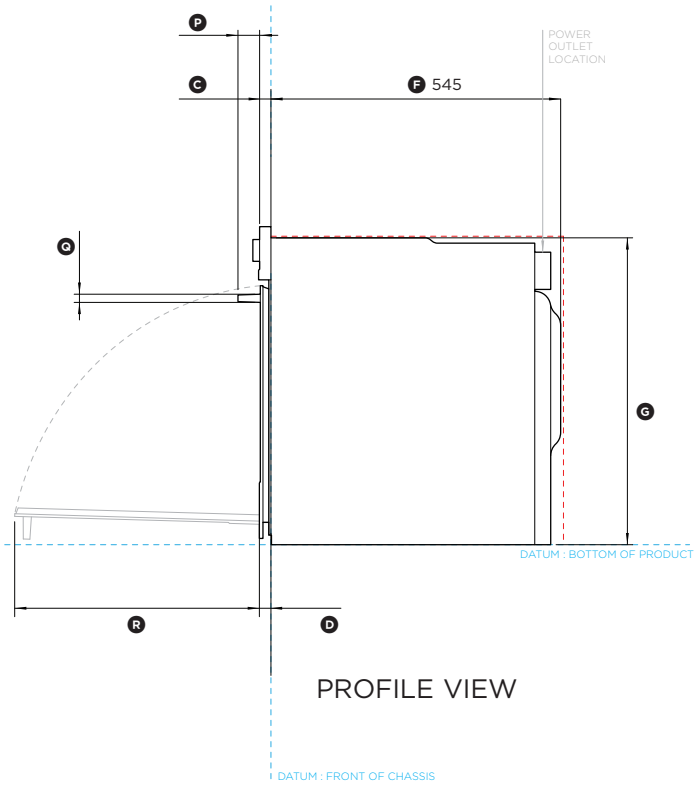

PROFILE VIEW



FISHER & PAYKEL

DATA SHEET
24" Oven

Model no:
OS24SDTDB1
(refer page 1 for imperial measurements)

Product Dimensions	**mm**
(A) Overall height of oven	598
(B) Overall width of oven	596
(C) Depth of control panel (excludes handle and front metal trim)	21
(D) Depth of front door (excluding front trim)	20
(E) Depth of oven chassis to front of door glass (excludes handle)	565
(F) Depth of chassis	545
(G) Height of chassis	577
(H) Width of chassis	556
(I) Height from bottom datum to top of oven door	487
(J) Height of metal cap on oven door	117
(K) Height from bottom datum to bottom of door	11
(L) Height of control panel	100
(M) Height of metal cap on control panel	20
(N) Height from bottom datum to centerline of handle	464
(O) Width of handle	565
(P) Depth of handle (measured from front of door)	42
(Q) Thickness of handle	16
(R) Depth of door (open) (measured from front of door)	460
(S) Control panel half open (measured from front of chassis)	84
(T) Control panel fully open (measured from front of chassis)	170
(U) Water tank carriage fully open	133

Minimum Clearances	**mm**
Minimum inside height of cavity	580
Minimum inside width of cavity	560
Minimum inside depth of cavity	550

INDICATES PRODUCT DATUM ----------
INDICATES CABINETRY CLEARANCES ----------

DATE: **17.11.2021**

IMPORTANT NOTE: Throughout this guide, dimensions may vary by ±2mm (1/16"). Please read the installation manual for detailed information on installing the product. For full installation instructions & specifications visit fisherpaykel.com