FRIGIDAIRE®

GAS COOKTOP

use & care

Welcome to Electrolux! Thank you for choosing our appliance.

For Customer Care support and webshop, or to downlad an extended version of this manual, visit: ElectroluxAppliances.com

Important Safety Instructions 3
Before Setting Surface Controls 9
Setting Surface Controls. 12
Care and Cleaning 15
Before You Call 18
Warranty 19

This manual is your resource for the use and care of your product. Please read it before using your appliance. Keep it handy for quick reference. If something doesn't seem right, the troubleshooting section will help you with common issues.

Visit Owner Support on ElectroluxAppliances.com for access to FAQs, how-to videos and articles, accessories and cleaning products.

We are here for you! Visit our website, chat with an agent, or call us if you need help. If you do need service, we can get that started for you.

For Peace of Mind Protection, register you product. Locate your registration card and/or label on your product with the photo register icon.

Keep your product info here so it's easy to find.

Model Number: _____

Serial Number: _____

Purchase Date: _____

Read all instructions before using this appliance.

This manual contains important safety symbols and instructions. Please pay attention to these symbols and follow all instructions given.

Do not attempt to install or operate your appliance until you have read the safety precautions in this manual. Safety items throughout this manual are labeled with a WARNING or CAUTION statement based on the risk type.

Warnings and important instructions appearing in this guide are not meant to cover all possible conditions and situations that may occur. Common sense, caution, and care must be exercised with installing, maintaining, or operating your appliance.

DEFINITIONS

This is the safety alert symbol. It is used to alert of potential personal injury hazards. Obey all safety messages that follow this symbol to avoid possible injury or death.

WARNING

Indicates a potentially hazardous situation which, if not avoided, may result in death or serious injury.

CAUTION

Indicates a potentially hazardous situation which, if not avoided, may result in minor or moderate injury.

IMPORTANT

Indicates installation, operation or maintenance information which is important but not hazard-related.

NOTE

Indicates a short, informal reference – something written down to assist the memory or for future reference.

WARNING

If the information in this manual is not followed exactly, a fire or explosion may result causing property damage, personal injury or death.

FOR YOUR SAFETY: Do not store or use gasoline or other flammable vapors and liquids in the vicinity of this or any other appliance.

WHAT TO DO IF YOU SMELL GAS:

- Do not try to light any appliance.
- Do not touch any electrical switch.
- Do not use any phone in your building.
- Immediately call your gas supplier from a neighbor's phone. Follow the gas supplier's instructions.
- If you cannot reach your gas supplier, call the fire department.

Installation and service must be performed by a qualified installer, servicer or the gas supplier."

IMPORTANT INSTRUCTIONS FOR UNPACKING AND INSTALLATION

IMPORTANT

Read and follow the below instructions and precautions for unpacking, installing, and servicing your appliance.

Remove all tape and packaging before using the appliance. Destroy the carton and plastic bags after unpacking the appliance. Never allow children to play with packaging material. Do not remove the wiring label and other literature attached to the appliance. Do not remove model/serial number plate.

Cold temperatures can damage the electronic control. When using this appliance for the first time, or when the appliance has not been used for an extended period of time, be sure the appliance has been in temperatures above 32ºF (0ºC) for at least 3 hours before turning on the power to the appliance.

Never modify or alter the construction of the appliance by removing the leveling legs, panels, wire covers, anti-tip brackets/screws, or any other part of the appliance.

Be sure to have an appropriate foam-type fire extinguisher available, visible, and easily accessible located near the appliance.

WARNING

Air curtain or other overhead range hoods which operate that operate by blowing a downward air flow onto a range or cooktop, shall not be used in conjunction with gas ranges or cooktops other than when the range or cooktop and hood have been designed, tested, and listed by an independent test laboratory for use in combination with each other.

GROUNDING INSTRUCTIONS

WARNING

- Avoid fire hazard or electrical shock. Failure to follow this warning may cause serious injury, fire, or death.
- Avoid fire hazard or electrical shock. Do not use an adapter plug, use an extension cord, or remove grounding prong from the power cord. Failure to follow this warning may cause serious injury, fire, or death.

Proper Installation—Be sure your appliance is properly installed and grounded by a qualified technician. In the United States, install in accordance with the National Fuel Gas Code ANSI Z223.1/NPFA No. 54, latest edition and National Electrical Code NFPA No. 70 latest edition, and local electrical code requirements. In Canada, install in accordance with CAN/CGA B149.1 and CAN/CGA B149.2 and CSA Standard C22.1, Canadian Electrical code, Part 1-latest editions and local electrical code requirements. Install only per installation instructions provided in the literature package for this appliance.

For personal safety, this appliance must be properly grounded. For maximum safety, the power cord must be securely connected to an electrical outlet or junction box that is the correct voltage, is correctly polarized and properly grounded, and protected by a circuit breaker in accordance with local codes.

It is the personal responsibility of the consumer to have the appropriate outlet or junction box with the correct, properly grounded wall receptacle installed by a qualified electrician. It is the responsibility and obligation of the consumer to contact a qualified installer to assure that the electrical installation is adequate and is in conformance with all local codes and ordinances.

See the installation instructions packaged with this appliance for complete installation and grounding instructions.

Conversion to (L.P.) Gas

This appliance allows for conversion to Liquefied Petroleum (L.P.) Gas.

WARNING

Personal injury or death from electrical shock may occur if the conversion to L.P. gas is not made by a qualified installer or electrician. Any additions, changes or conversions required in order for this appliance to satisfactorily meet the application needs must be made by a qualified technician.

If L.P. conversion is needed, contact your local L.P. Gas provider for assistance.

IMPORTANT INSTRUCTIONS FOR USING THE APPLIANCE

WARNING

- Storage In or On Appliance—Flammable materials should not be stored in an oven or microwave, near surface burners or elements, or in the storage or warmer drawer (if equipped). This includes paper, plastic, and cloth items, such as cookbooks, plastic ware, and towels, as well as flammable liquids. Do not store explosives, such as aerosol cans, on or near the appliance.
- Do not leave children alone - Children should not be left alone or unattended in the area where appliance is in use. They should never be allowed to sit or stand on any part of the appliance, including the storage drawer, lower broiler drawer, warmer drawer, or lower double oven.
- Do not store items of interest to children in the cabinets above the appliance or on the backguards of ranges. Children climbing on or near the appliance to reach items could be seriously injured.
- Do not allow children to climb or play around the appliance. The weight of a child on an open oven door may cause the appliance to tip, resulting in serious burns or other injury. An open drawer when hot may cause burns.

WARNING

- Stepping, leaning, or sitting on the door or drawers of this appliance can result in serious injuries and also cause damage to the appliance.
- Never cover any slots, holes or passages in the oven bottom or cover and entire rack with materials such as aluminum foil. Doing so blocks air flow through the oven and may cause carbon monoxide poisoning. Aluminum foil linings may also trap heat, causing a fire hazard.
- Do not use oven or warmer drawer (if equipped) for storage.
- Never use your appliance as a space heater to heat or warm the room. Doing so may result in carbon monoxide poisoning and overheating of the appliance.

CAUTION

- When heating fat or grease, watch it closely. Grease may catch fire if it becomes too hot.
- Do not use water or flour on grease fires. Smother fire or flame or use dry chemical or foam-type extinguisher. Cover the fire with a pan lid or use baking soda.
- Use dry potholders. Moist or damp potholders on hot surfaces may result in burns from steam. Do not let potholders touch hot cooking areas. Do not use towels or other bulky cloths.
- Do not heat unopened food containers - Build-up of pressure may cause container to burst and result in injury.

CAUTION

- Wear proper apparel - Loose-fitting or hanging garments should never be worn while using the appliance. Do not let clothing or other flammable materials contact hot surfaces.
- Do not touch surface burners or elements, areas near these burners or elements, interior surfaces of the oven, or the warmer drawer (if equipped). Surface burners and elements may be hot even though they appear cool. Areas near surface burners and elements may become hot enough to cause burns. During and after use, do not touch, or let clothing or other flammable materials touch these areas until they are cool. These areas may include the cooktop, surfaces facing the cooktop, oven vent areas, oven door, and oven window.
- Do not attempt to operate the appliance during a power failure. If the power fails, always turn off the appliance. If the appliance is not turned off and the power resumes, electric surface elements may resume operation when power is restored. Once the power resumes, reset the clock and the oven function.

IMPORTANT INSTRUCTIONS FOR USING YOUR GAS COOKTOP

CAUTION

Use Proper Flame Size — Adjust flame size so it does not extend beyond the edge of the utensil. The use of undersized utensils will expose a portion of the burner flame to direct contact and may result in ignition of clothing. Proper relationship of utensil to flame will also improve efficiency.

Know which knob or key controls each surface heating area. Place cookware with food on the cooking area before turning it on. Turn the cooking area off before removing the cookware.

Use proper pan size. This appliance is equipped with one or more surface units of different sizes. Select cookware with flat bottoms that match the surface unit heating element. The use of undersized cookware may expose a portion of the flame to direct contact and may result in the ignition of clothing or other items. Using the proper cookware on the cooking areas will improve efficiency.

Always turn knob to the full LITE position when igniting top burners. Visually check that burner has lit. Then adjust the flame so it does not extend beyond the edge of the utensil.

To reduce the risk of burns, ignition of flammable materials, and spillage due to unintentional contact with the utensil, the handle of the utensil should be positioned so that it is turned inward, and does not extend over adjacent surface burners

Never leave surface burners unattended at high heat settings — Boil overs cause smoking and greasy spill overs that may ignite, or a pan that has boiled dry may melt.

Glazed cooking utensils — Only certain types of glass, glass/ceramic, ceramic,earthenware, or other glazed utensils are suitable for cook top service without breaking due to the sudden change in temperature. Check the manufacturer's recommendations for cook top use.

When you are flaming foods under a ventilating hood, turn the fan on.

IMPORTANT INSTRUCTIONS FOR CLEANING YOUR APPLIANCE

CAUTION

Before manually cleaning any part of the appliance, be sure all controls are turned off and the appliance is cool. Cleaning a hot appliance can cause burns.

Clean the appliance regularly to keep all parts free of grease that could catch fire. Do not allow grease to accumulate. Greasy deposits in the fan could catch fire.

Always follow the manufacturer's recommended directions for use of kitchen cleaners and aerosols. Be aware that excess residue from cleaners and aerosols may ignite causing damage and injury.

Clean venitlating hoods frequently - Grease should not be allowed to accumulate on hood or filter. Follow the manufacturer's instructions for cleaning vent hoods.

IMPORTANT INSTRUCTIONS FOR SERVICE AND MAINTENANCE

Do not repair or replace any part of the appliance unless specifically recommended in the manuals. All other servicing should be done only by a qualified technician. This reduces the risk of personal injury and damage to the appliance.

Always contact your dealer, distributor, service agent, or manufacturer about problems or conditions you do not understand.

Ask your dealer to recommend a qualified technician and an authorized repair service. Know how to disconnect the power to the appliance at the circuit breaker or fuse box in case of an emergency.

Important: This appliance has been tested and found to comply with the limits for a class B digital device, pursuant to Part 18 of the FCC rules (United States) and ICES-001 (Canada). These limits are designed to provide reasonable protection against harmful interference in a residential installation. This unit uses and can radiate radio frequency energy and, if not installed and used in accordance with the instructions, may cause harmful interference to radio communications. However there is no guarantee that interference will not occur in a particular installation. If this unit does cause harmful interference to radio or television reception, which can be determined by turning the unit off and on, the user is encouraged to try to correct the interference by one or more of the following measures:

- Reorient or relocate the receiving antennae.
- Increase distance between unit and receiver.
- Connect the unit into an outlet or a circuit different from that to which the receiver is connected.

Gas surface burner types

The cooktop is equipped with gas surface burners with different BTU ratings. The ability to heat food quickly and in large amounts increases as the burner size increases.

- Small burners are best used for low-flame heating of small amounts of food.
- Standard burners can be used for most surface cooking needs.
- The largest burner is best used for bringing large quantities of liquid rapidly up to temperature or when preparing larger quantities of food. The large burner is located at the right front position on the cooktop.

Regardless of size, always select cookware that is suitable for the amount and type of food being prepared. Select a burner and set the flame size appropriately for the pan. Never allow flames to extend beyond the outer edge of the pan.

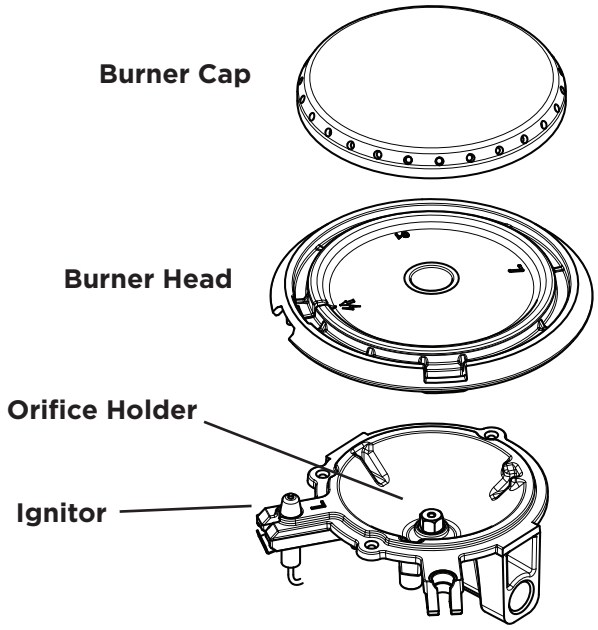

Figure 1: Burner cap, burner head, ignitor, and orifice

CAUTION

- Do not allow spills, food, cleaning agents, or any other material to enter the gas orifice holder opening.
- Always keep the burner caps and burner heads in place whenever the surface burners are in use.
- Never place flammable items on the cooktop.

Assembly of the Burner Caps

Make sure that all of the surface burner caps and surface burner grates are installed correctly and at the correct locations.

1. Remove all packing material from the cooktop area.
2. Make sure burner head and caps are properly placed on the surface burners.

Important: The burner head has a hole which fits over the ignitor. Make sure the head fits snugly before placing the burner caps.

Note: Unpack the burner grates and position them on the cooktop after the burner heads and caps are properly installed.

Using Proper Cookware

The size and type of cookware used will influence the heat setting needed for best cooking results. Be sure to follow the recommendations for using proper cookware as illustrated in “Figure 2: Testing cookware” and “Figure 3: Proper cookware”.

Check for flatness by rotating a ruler across the bottom of the cookware (see “Figure 2: Testing cookware”). Cookware should have flat bottoms that make good contact with the entire surface of the heating element.

Figure 3: Testing cookware

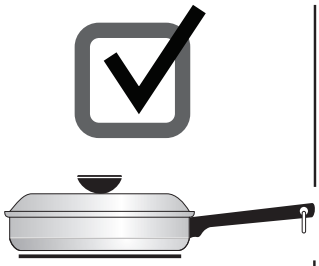

- Flat bottom and straight sides.
- Tight fitting lids.
- Weight of handle does not tilt pan. Pan is well balanced.
- Pan sizes match the amount of food to be prepared and the size of the surface element.
- Made of material that conducts heat well.
- Easy to clean.
- Always match pot diameter to element size.

- Curved and warped pans.

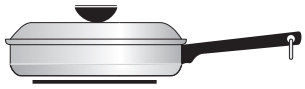

- Cookware larger than element by more than one-half inch or 12mm.

- Heavy handle tilts pan.

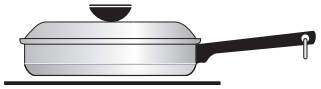

- Pan is much smaller than the element.

Figure 4: Proper cookware

Cookware Material Types

The cookware material determines how evenly and quickly heat is transferred from the surface element to the pan bottom. The most popular materials available are:

- **Aluminum** - Excellent heat conductor. Some types of food will cause it to darken (Anodized aluminum cookware resists staining and pitting).
- **Copper** - Excellent heat conductor but discolors easily (see Aluminum).
- **Stainless** - Slow heat conductor with uneven cooking results. Durable, easy to clean, and resists staining.
- **Cast Iron** - A slow heat conductor, but will retain heat very well. Cooks evenly once cooking temperature is reached.
- **Porcelain-enamel on metal** - Heating characteristics will vary depending on base material.
- **Glass** - Slow heat conductor.

IMPORTANT

Do not place empty aluminum, glass, or porcelain-enamel coated cookware on the burner. The melting point of cookware made with these materials may be reached quickly, especially if left empty. If the cookware melts it will damage the cooktop. Follow all the cookware manufacturer’s recommendations for use and care of cookware.

IMPORTANT

NEVER place or straddle a cooking utensil over two different surface cooking areas at the same time. Incorrect use may damage the cooktop.

Install Burner Grates

To install burner grates, place the grates flat-side down and align them into the cooktop recess.. The grates have tabs that interlock, so it is important to place the center grate first.

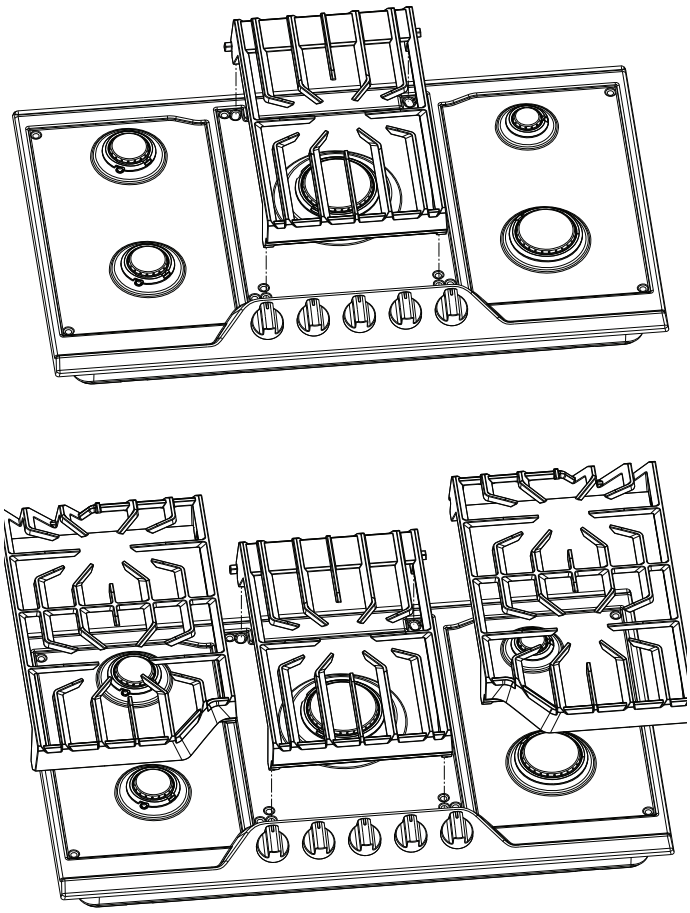

Figure 5: Install grates middle-first

IMPORTANT

- Make sure the burner grates are properly placed on the cooktop before using the surface burners (Figure 4). The grates are designed to rest inside the recess on the cooktop.
- Grates should rest flush against each other and against the sides of the recess.
- Do not line the area underneath the grates or any part of the cooktop with aluminum foil or with any other lining.

Locations of the Gas Surface Burners

1. The SIMMER burner is best used for simmering delicate sauces, etc.
2. The STANDARD sized burners are used for most surface cooking needs.
3. The POWER burner is best used for bringing large quantities of liquid rapidly up to temperature or when preparing larger quantities of food.

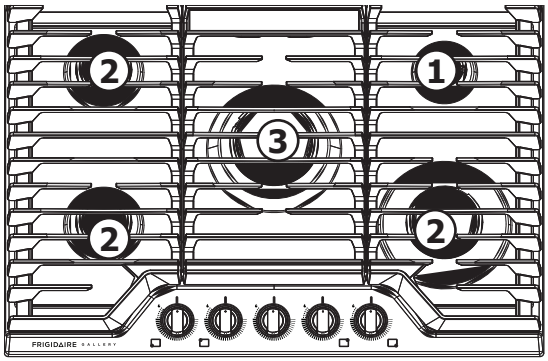

Figure 6: 30” Cooktop

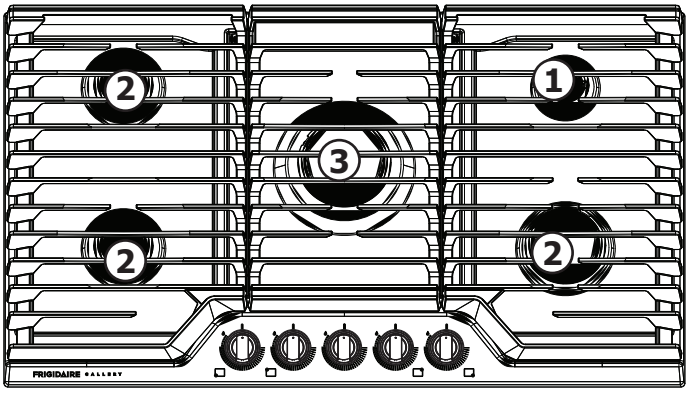

Figure 7: 36” Cooktop

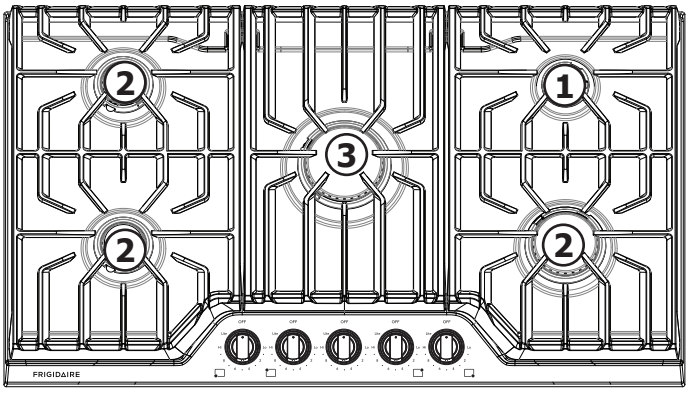

Figure 9: 36” Cooktop

Setting a surface burner:

1. Place cooking utensil on center of surface burner grate. Be sure the cooking utensil rests stable on the burner grate.
2. Push the burner’s surface control knob in and turn counterclockwise out of the OFF position (Figure 8).
3. Release the surface control knob and rotate to the LITE position (✱). Visually check that the burner has a steady gas flame.
4. Once the surface burner has a flame, push the surface control knob in and turn counterclockwise to the desired flame size setting. Adjust the flame as needed using the knob markings.

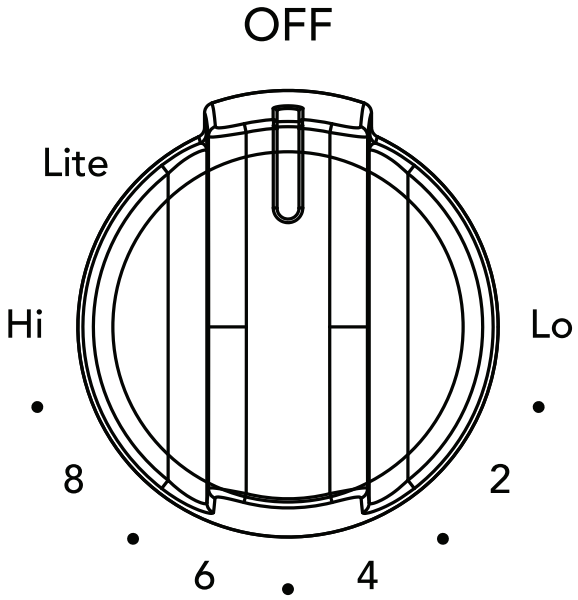

Figure 8: Surface control knob

CAUTION

Do not place flammable items such as plastic wrappings, spoon holders, or plastic salt and pepper shakers on the cooktop when it is in use. These items could melt or ignite. Potholders, towels, or wooden spoons could catch fire if placed too close to the surface burners.

NOTES

- When setting a surface control knob to the lite position, all of the electronic surface ignitors will spark at the same time. However, only the surface burner you are setting will ignite.
- In the event of an electrical power outage, the surface burners may be lit manually. To light a surface burner, hold a lit match to the burner head, then slowly turn the surface control knob to lite. Once the burner ignites, push in and turn knob out of lite then to the desired flame setting. Use caution when lighting surface burners manually.

CAUTION

Never extend the flame beyond the outer edge of the cooking utensil. A higher flame wastes energy, and increases your risk of being burned by the flame (Figure 10).

Set proper burner flame size

The color of the flame is the key to proper burner adjustment. A good flame is clear, blue and hardly visible in a well-lighted room. Each cone of flame should be steady and sharp. Adjust or clean the burner if flame is yellow-orange.

For most cooking: start on the highest setting and then turn to a lower setting to complete the process. Use the recommendations below as a guide for determining proper flame size for various types of cooking (Table 1).

For deep fat frying: use a thermometer and adjust the surface knob accordingly. If the fat is too cool, the food will absorb the fat and be greasy. If the fat is too hot, the food will brown so quickly that the center will be under-cooked. Do not attempt to deep fat fry too much food at once as the food will neither brown nor cook properly.

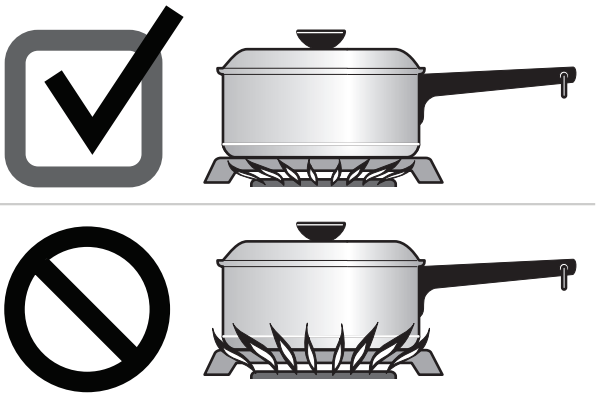

Figure 10: Proper burner flame

Flame size	Type of cooking
High flame	Start most foods; bring water to a boil; pan broiling
Medium flame	Maintain a slow boil; thicken sauces, gravies; steaming
Low flame	Keep foods cooking; poaching; stewing
These settings are based on medium-weight metal or aluminum pans with lids. Settings may vary when using other types of pans.	

Table 1: Recommended flame settings for cooking

Using a Griddle (not included)

Use non-stick cooking spray or oil as needed. Slowly preheating the griddle ensures even heat distribution for best cooking results.

Before first use:

- Wash Griddle in hot soapy water. Rinse and then dry completely.

After each use:

- Store in a dry place and keep uncovered.
- After each use, clean with a stiff brush and hot water.

Using the Griddle:

- Place the griddle centered over the left side gas burners.
- Preheat the griddle for 5 minutes on medium to medium low setting. Slow preheat ensures even heat distribution during the cooking process.
- DO NOT preheat the griddle on HI setting. Preheating on HI may warp the griddle and prevent even heat distribution.

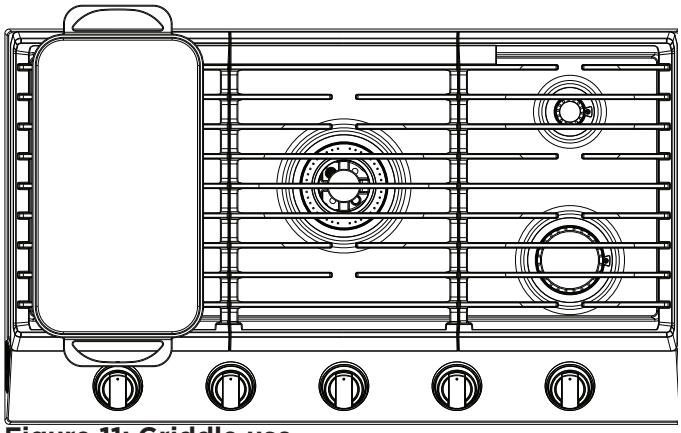

Figure 11: Griddle use

NOTES

You can order a griddle from frigidaire.com.

Home Canning

Be sure to read and observe all the following points when home canning with your appliance. Check with the USDA (United States Department of Agriculture) Web site and be sure to read all the information they have available as well as follow their recommendations for home canning procedures.

- Use only a completely flat bottom canner with no ridges that radiate from the bottom center when home canning. Heat is spread more evenly when the bottom surface is flat. Use a straight-edge to check canner bottom.
- Make sure the diameter of the canner does not exceed 1 inch beyond the surface element markings or burner.
- It is recommended to use smaller diameter canners on electric coil and ceramic glass cooktops and to center canners on the burner grates.
- Start with hot tap water to bring water to boil more quickly.
- Use the highest heat setting when first bringing the water to a boil. Once boiling is achieved, reduce heat to lowest possible setting to maintain that boil.
- Use tested recipes and follow instructions carefully. Check with your local Cooperative Agricultural Extension Service or a manufacturer of glass jars for the latest canning information.
- It is best to can small amounts and light loads.

Do not leave water bath or pressure canners on high heat for an extended amount of time.

Remove spills and any heavy soiling as soon as possible. Regular cleaning will reduce the difficulty of major cleaning later.

CAUTION

Before cleaning any part of the appliance, be sure all controls are turned off and the appliance is cool.

If ammonia or appliance cleaners are used, they must be removed and the appliance must be thoroughly rinsed before operating. Follow manufacturer's instructions and provide adequate ventilation.

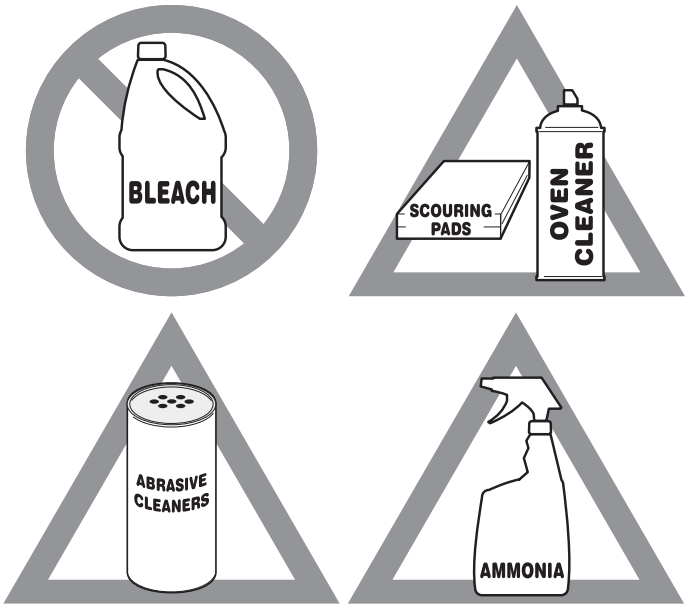

Figure 13: Use cleaners with caution

Surface or Area	Cleaning Recommendation
Aluminum and vinyl	Using a soft cloth, clean with mild dish detergent and water. Rinse with clean water, dry and polish with a soft, clean cloth.
Painted and plastic control knobs Painted body parts Painted decorative trims	Using a soft cloth, clean with mild dish detergent and water or a 50/50 solution of vinegar and water. Rinse with clean water, dry and polish with a soft, clean cloth. Glass cleaners may be used, but do not apply directly to surface; spray onto cloth and wipe.
Control panel	Using a soft cloth, clean with mild dish detergent and water or a 50/50 solution of vinegar and water. Do not spray liquids directly on the oven control and display area. Do not use large amounts of water on the control panel - excess water on the control area may cause damage to the appliance. Do not use other liquid cleaners, abrasive cleaners, scouring pads, or paper towels - they will damage the finish.
Control knobs	Using a soft cloth, clean with mild dish detergent and water or a 50/50 solution of vinegar and water. To remove control knobs: turn to the OFF position, grasp firmly, and pull off the shaft. To replace knobs after cleaning, line up the OFF markings and push the knobs into place.
Stainless Steel	Using a soft cloth, clean with mild dish detergent and water or a 50/50 solution of vinegar and water. Rinse with clean water, dry with a soft clean cloth. Do not use cleaners containing abrasives, chlorides, chlorine, or ammonia.
Coated Stainless Steel	Using a soft cloth, clean with mild dish detergent and water or a 50/50 solution of vinegar and water. Rinse with clean water, dry with a soft clean cloth. Do not use appliance cleaner, stainless steel cleaner, or cleaner containing abrasives, chlorides, chlorine, or ammonia. These cleaners may damage the finish.

Surface or Area	Cleaning Recommendation
Gas cooktop surface burners	See “Cleaning the sealed burners” on page 22.
Gas cooktop surface grates Gas cooktop burner caps	Use a non-abrasive plastic scrubbing pad and mild abrasive cleanser. Do not allow food spills with a high sugar or acid content (milk, tomatoes, sauerkraut, fruit juices or pie filling) to remain on the burner grates or burner caps. These spills may cause a dull spot even after cleaning. Clean these spills as soon as surfaces are cool. Thoroughly dry immediately following cleaning. Cooktop grates are dishwasher safe but we recommend hand washing.

Cleaning the burner heads

To avoid possible burns, do not attempt cleaning before turning off all surface burners and allowing them to cool.

Any additions, changes, or conversions required in order for this appliance to satisfactorily meet the application needs must be made by an authorized qualified Agency. Routinely clean the cooktop. Wipe with a clean, damp cloth and wipe dry to avoid scratches. Keeping the surface burner head ports and slots clean will prevent improper ignition and an uneven flame.

To clean recessed and contoured areas of cooktop:

- If a spill occurs on or in the recessed or contoured areas, blot up spill with an absorbent cloth.
- Rinse with a clean, damp cloth and wipe dry.

CAUTION

To avoid possible burns do not attempt to operate the surface burners without the burner caps.

Do not use spray oven cleaner on the cooktop.

To clean burner heads:

1. Remove the burner cap and burner head (see Figure 14). Clean the cap and head with hot soapy water and dry thoroughly.
2. For burned-on and dried spills, apply hot soapy water to the burner cap and head to allow time for the soils to soften.
3. Use a toothbrush to clean all over the burner head.
4. Wipe the burner cap and head clean with a soft, clean cloth, sponge, or scratch-free cleaning pad. Wipe out burner orifice with a cloth before placing burner head and cap back on. The burner assembly must be completely dry before use.
5. Make sure the burner caps and heads are placed and seated properly over the ignitor. The three mounting legs on burner will align with slots on the orifice holder. When placed correctly, the burner cap should not move off the burner head (see “Assembly of the Burner Caps” on page 9).
6. If burner fails to light, recheck placement of burner head to the orifice holder and cap.

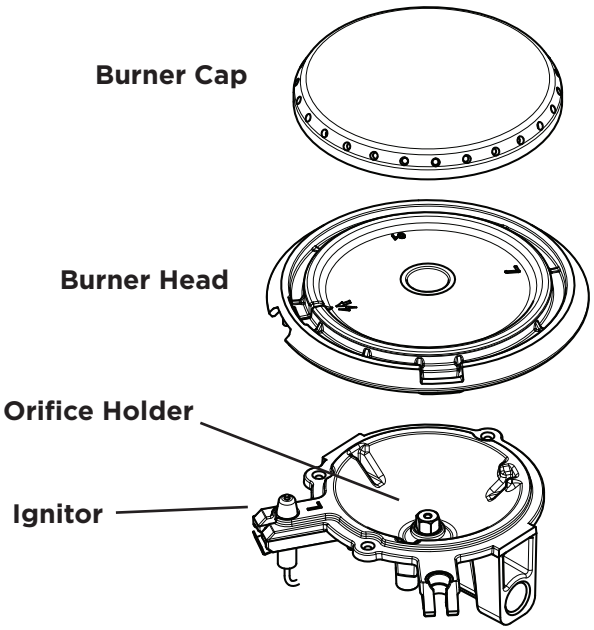

Figure 14: Removeable burner components

Important notes:

- Always keep the surface burner caps in place whenever a surface burner is in use.
- When replacing the burner caps, be sure the burner caps are seated firmly on top of the burner heads.
- For proper flow of gas and ignition of burners do not allow spills, food, cleaning agents, or any other material to enter the gas orifice port opening.

BEFORE YOU CALL

Let us help you troubleshoot your concern! This section will help you with common issues. If you need us, visit our website, chat with an agent, or call us. We may be able to help you avoid a service visit. If you do need service, we can get that started for you!

1-877-435-3287 (United States)
ElectroluxAppliances.com

1-800-265-8352 (Canada)
ElectroluxAppliances.ca

Problem	Cause / Solution
Entire appliance does not operate	Appliance not connected. Make sure power cord is plugged properly into outlet. Check your fuse box or breaker box to make sure the circuit is active. Electrical power outage. Check house lights to be sure. Call your local electric company for service outage information.

Cooktop Problems	
Problem	**Cause / Solution**
Surface burners do not ignite.	Surface control knob was not completely turned to LITE (). Push in and turn the surface control knob to LITE until the burner ignites and then turn the control knob to the desired flame size. Burner ports are clogged. With the burner OFF and cool, use a small-gauge wire or needle to clean the burner head slots and ignition ports. See“Cleaning the Cooktop and Surface Burners” in the Care & Cleaning section on page 25 for additional cleaning instructions. Range power cord is disconnected from outlet (electric ignition models only). Be sure the power cord is securely plugged into the power outlet. Circuit is broken. Check breaker box or fuse box. Electrical power outage. Burners may be lit manually. See “Setting Surface Burners” on page 13.
Surface burner flame uneven or only part way around burner cap.	Burner slots or ports are clogged. With the surface burner OFF and cool, clean ports with a small-gauge wire or needle. If moisture is present after cleaning, lightly fan the flame and allow the burner to operate until flame is full. Burner caps are not seated properly. Check that all burner caps are level and seated correctly on the burner heads. See“Cleaning the Cooktop and Surface Burners” in the Care & Cleaning section on page 25 for additional cleaning instructions.
Surface burner flame is too high.	Surface control knob is set too high. Adjust to a lower flame setting. Burner caps are not seated properly. Check that all surface burner caps are level and seated correctly on the surface burner heads. See“Cleaning the Cooktop and Surface Burners” in the Care & Cleaning section on page 25 for additional cleaning instructions. Incorrect L.P. conversion. Refer to L.P. conversion kit instructions to correct.
Surface burner flame is orange.	Dust particles in main gas line. Allow the burner to operate a few minutes until flame turns blue. In coastal areas, a slightly orange flame is unavoidable due to salt content in the air. Incorrect L.P. conversion. Refer to L.P. conversion kit instructions to correct.

Your appliance is covered by a one year limited warranty. For one year from your original date of purchase, Electrolux will pay all costs for repairing or replacing any parts of this appliance that prove to be defective in materials or workmanship when such appliance is installed, used and maintained in accordance with the provided instructions.

Exclusions

This warranty does not cover the following:

Products with original serial numbers that have been removed, altered or cannot be readily determined.

Product that has been transferred from its original owner to another party or removed outside the USA or Canada.

Rust on the interior or exterior of the unit.

Products purchased "as-is" are not covered by this warranty.

Food loss due to any refrigerator or freezer failures.

Products used in a commercial setting.

Service calls which do not involve malfunction or defects in materials or workmanship, or for appliances not in ordinary household use or used other than in accordance with the provided instructions.

Service calls to correct the installation of your appliance or to instruct you how to use your appliance.

Expenses for making the appliance accessible for servicing, such as removal of trim, cupboards, shelves, etc., which are not a part of the appliance when it is shipped from the factory.

Service calls to repair or replace appliance light bulbs, air filters, water filters, other consumables, or knobs, handles, or other cosmetic parts.

Surcharges including, but not limited to, any after hour, weekend, or holiday service calls, tolls, ferry trip charges, or mileage expense for service calls to remote areas, including the state of Alaska.

Damages to the finish of appliance or home incurred during installation, including but not limited to floors, cabinets, walls, etc.

Damages caused by: services performed by unauthorized service companies; use of parts other than genuine Electrolux parts or parts obtained from persons other than authorized service companies; or external causes such as abuse, misuse, inadequate power supply, accidents, fires, or acts of God.

DISCLAIMER OF IMPLIED WARRANTIES; LIMITATION OF REMEDIES

CUSTOMER'S SOLE AND EXCLUSIVE REMEDY UNDER THIS LIMITED WARRANTY SHALL BE PRODUCT REPAIR OR REPLACEMENT AS PROVIDED HEREIN. CLAIMS BASED ON IMPLIED WARRANTIES, INCLUDING WARRANTIES OF MERCHANTABILITY OR FITNESS FOR A PARTICULAR PURPOSE, ARE LIMITED TO ONE YEAR OR THE SHORTEST PERIOD ALLOWED BY LAW, BUT NOT LESS THAN ONE YEAR. ELECTROLUX SHALL NOT BE LIABLE FOR CONSEQUENTIAL OR INCIDENTAL DAMAGES SUCH AS PROPERTY DAMAGE AND INCIDENTAL EXPENSES RESULTING FROM ANY BREACH OF THIS WRITTEN LIMITED WARRANTY OR ANY IMPLIED WARRANTY. SOME STATES AND PROVINCES DO NOT ALLOW THE EXCLUSION OR LIMITATION OF INCIDENTAL OR CONSEQUENTIAL DAMAGES, OR LIMITATIONS ON THE DURATION OF IMPLIED WARRANTIES, SO THESE LIMITATIONS OR EXCLUSIONS MAY NOT APPLY TO YOU. THIS WRITTEN WARRANTY GIVES YOU SPECIFIC LEGAL RIGHTS. YOU MAY ALSO HAVE OTHER RIGHTS THAT VARY FROM STATE TO STATE.

If You Need Service

Keep your receipt, delivery slip, or some other appropriate payment record to establish the warranty period should service be required. If service is performed, it is in your best interest to obtain and keep all receipts. Service under this warranty must be obtained by contacting Electrolux at the addresses or phone numbers below.

This warranty only applies in the USA and Canada. In the USA, your appliance is warranted by Electrolux Major Appliances North America, a division of Electrolux Home Products, Inc. In Canada, your appliance is warranted by Electrolux Canada Corp. Electrolux authorizes no person to change or add to any obligations under this warranty. Obligations for service and parts under this warranty must be performed by Electrolux or an authorized service company. Product features or specifications as described or illustrated are subject to change without notice.

USA
1-877-435-3827
Electrolux Major Appliances NA
10200 David Taylor Drive
Charlotte, NC 28262

Electrolux

Canada
1.800.265.8352
Electrolux Canada Corp.
5855 Terry Fox Way
Mississauga, Ontario, Canada
L5V 3E4

FRIGIDAIRE

A01704507 A 10/2021

welcome *home*

Our home is your home. Visit us if you need help with any of these things:

- owner support
- accessories
- service
- registration

(See your regristration card for more information.)

Frigidaire.com
1-800-374-4432

Frigidaire.ca
1-800-265-8352