VENTILATION ACCESSORIES
BLOWERS
MASTERPIECE® & PROFESSIONAL COLLECTION

CHOOSING THE CORRECT BLOWER

A variety of interior and exterior blower options (Remote, Inline or Integrated/Internal) are available for Thermador Professional and Masterpiece® Hoods. If the unit you have selected does not have a blower, one can be purchased separately. Blower selection will vary based on the volume of air that needs to be moved and the length and location of the duct run. For long duct runs with multiple turns and bends, consider using a more powerful blower. For the most efficient air flow exhaust, use a straight run or as few elbows as possible.

REMOTE BLOWERS

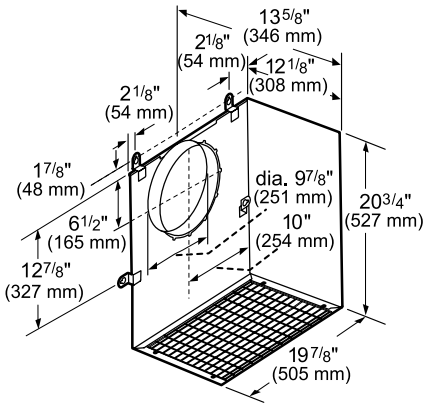

measurements in inches and mm

VTR2FZ

- 1000 Max. CFM
- 10" Diameter Duct
- 120 V / Hertz – 60 Hz
- Dedicated breaker – 15 AMP
- Mounted on roof or exterior wall
- Net Weight – 41 lbs.
- RFPLT1000P – Roof mounting plate accessory sold separately
- EXTNCB25W – 25-ft. blower connector cable sold separately

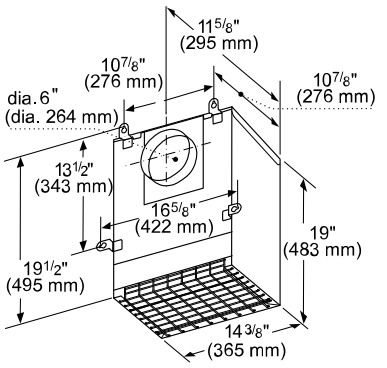

measurements in inches (mm)

VTR1FZ

- 600 Max. CFM
- 6" Diameter Duct
- 120 V / Hertz – 60 Hz
- Dedicated breaker – 15 AMP
- Mounted on roof or exterior wall
- Net Weight – 24 lbs.
- RFPLT600P – Roof mounting plate accessory sold separately
- EXTNCB25W – 25-ft. blower connector cable sold separately

INLINE BLOWERS

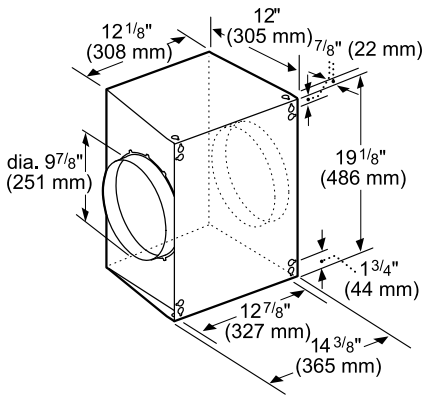

measurements in inches and mm

VTI2FZ

- 1000 Max. CFM
- 10" Diameter Duct
- 120 V / Hertz – 60 Hz
- Dedicated breaker – 15 AMP
- Mounted along the duct line between the kitchen and the exterior wall
- Net Weight – 30 lbs.
- EXTNCB25W – 25-ft. blower connector cable sold separately

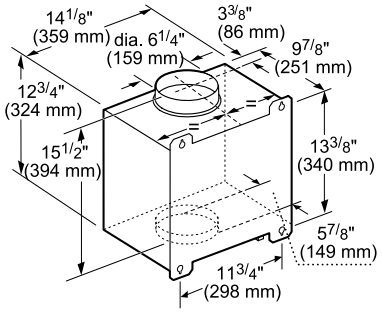

measurements in inches and mm

VTI1FZ

- 600 Max. CFM
- 6" Diameter Duct
- 120 V / Hertz – 60 Hz
- Dedicated breaker – 15 AMP
- Mounted along the duct line between the kitchen and the exterior wall.
- Net Weight – 19 lbs.
- EXTNCB25W – 25-ft. blower connector cable sold separately

VENTILATION ACCESSORIES
BLOWERS
MASTERPIECE® & PROFESSIONAL COLLECTION

INTEGRATED BLOWERS

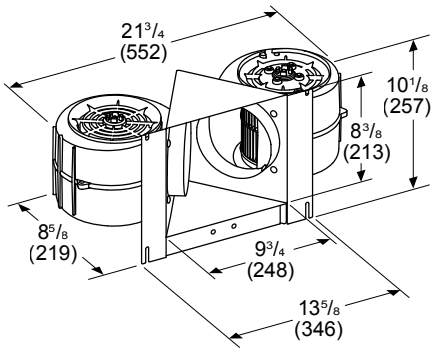

Measurements in inches (mm)

VTN2FZ
- 1000 Max. CFM
- 10" Diameter Duct
- 120 V / Hertz – 60 Hz
- Dedicated breaker – 15 AMP
- Internal blower mounted within hood
- Net Weight – 19 lbs.

Measurements in inches (mm)

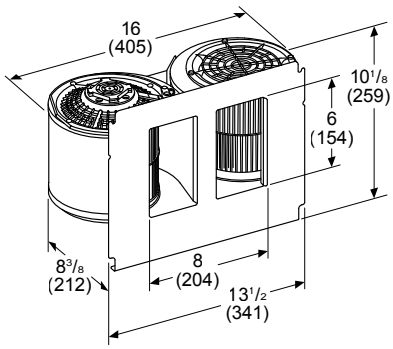

VTN2DA
- 700 Max. CFM
- 10" Diameter Duct
- 120 V / Hertz – 60 Hz
- Dedicated breaker – 15 AMP
- Internal blower mounted within hood
- Net Weight – 14 lbs.

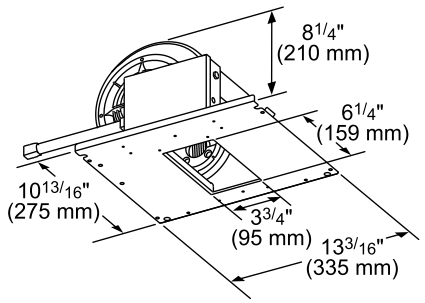

measurements in inches (mm)

VTN1DZ
- 400 Max. CFM
- 6" Diameter Duct
- 120 V / Hertz – 60 Hz
- Dedicated breaker – 15 AMP
- Internal blower mounted within hood
- Net Weight – 10 lbs.

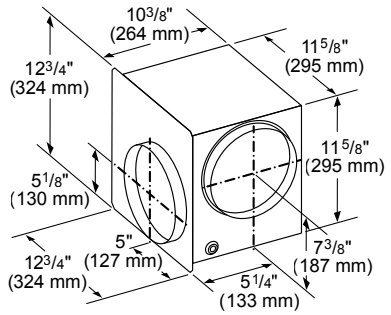

measurements in inches (mm)

VTD600P – DOWNDRAFT
- 600 Max. CFM
- 8" Diameter Duct
- 120 V / Hertz – 60 Hz
- Dedicated breaker – 15 AMP
- Internal blower mounted within hood
- Net Weight – 20 lbs.

HVI PERFORMANCE VALUES

Models	Exhaust Discharge	Duct Size	Speed	Static Pressure (w.g.)	WATTS	CFM	Sones
VTI1FZ	Horizontal	6" Dia.	High	0.2"	423	530	-
VTI2FZ	Horizontal	10" Dia.	High	0.2"	747	920	-
VTR1FZ	Horizontal	6" Dia.	High	0.03"	393	410	-
VTR2FZ	Horizontal	10" Dia.	High	0.03"	812	830	-
VTN2DA	Horizontal	10" Dia.	High	0.1"	504	640	8.5
	Vertical	10" Dia.	High	.01"	511	650	8
VTN2FZ	Vertical	10" Dia.	High	0.1"	810	920	14.5
VTN1DZ	Horizontal	6" Dia.	High	0.1"	255	330	7
VTD600P	Horizontal	8" Dia.	High	0.1"	530	560	-

HVI-2100 CERTIFIED RATINGS comply with new testing technologies and procedures prescribed by the Home Ventilating Institute, for off-the-shelf products, as they are available to consumers. Product performance is rated at 0.1 in. static pressure, based on tests conducted in AMCA's state-of-the-art test laboratory. Sones are a measure of humanly perceived loudness, based on laboratory measurements.

These warranties give you specific legal rights and you may have other rights that vary from state to state. Limited warranty from date of delivery. For complete warranty details, refer to your Use & Care manual, or ask your dealer.

Specifications are for planning purposes only. Refer to installation instructions and consult your countertop supplier prior to making counter opening. Consult with a heating and ventilation engineer for your specific ventilation requirements. For the most detailed information, refer to installation instructions accompanying product or write to Thermador indicating the model number. Specifications are correct at time of printing. Thermador reserves the right to change product specifications or design without notice. Some models are certified for use in Canada. Thermador is not responsible for products that are transported from the U.S. for use in Canada.

PFAS

1 800 735 4328 | USA THERMADOR.COM | CANADA THERMADOR.CA | ©2026 BSH HOME APPLIANCES CORPORATION. ALL RIGHTS RESERVED.