FRIGIDAIRE

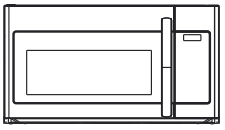

Microwave Oven

use & care

Introduction 2
Precautions Microwave Energy 3
Important Safety Instructions 4-7
Names Of Oven Parts And Accessories . . . 8
Operation 9-17
Maintenance 18
Cleaning And Care 19-22
Service Call Check 23
Warranty 24

A06823435 (September 2023)

Welcome to our *family*

Thank you for bringing Frigidaire into your home! We see your purchase as the beginning of a long relationship together.

This manual is your resource for the use and care of your product. Please read it before using your appliance. Keep it handy for quick reference. If something doesn't seem right, the troubleshooting section will help you with common issues.

FAQs, helpful tips and videos, cleaning products, and kitchen and home accessories are available at www.frigidaire.com.

We are here for you! Visit our website, chat with an agent, or call us if you need help. We may be able to help you avoid a service visit. If you do need service, we can get that started for you.

Let's make it official! Be sure to register your product.

Keep your product info here so it's easy to find.

Model Number: _____

Serial Number: _____

Purchase Date: _____

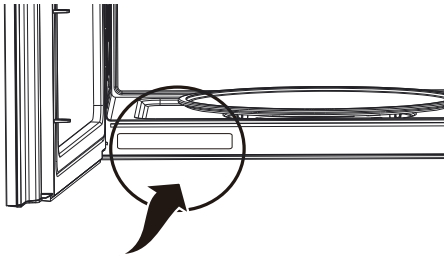

Serial Number Location

Let's make it official! Be sure to register your product.

Visit us at Frigidaire.com/register

Or use your mobile device to scan the QR code.

PRECAUTIONS TO AVOID POSSIBLE EXPOSURE TO EXCESSIVE MICROWAVE ENERGY

Do not attempt to operate this oven with the door open since open door operation can result in harmful exposure to microwave energy. It is important not to defeat or tamper with the safety interlocks.

Do not place any object between the oven front face and the door or allow soil or cleaner residue to accumulate on sealing surfaces.

WARNING

To reduce the risk of burns, electric shock, fire, injury to persons or exposure to excessive microwave energy:

Do not operate the oven if it is damaged. It is particularly important that the oven door close properly and that there is no damage to the:

(1) DOOR (bent)
(2)HINGES AND LATCHES (broken or loosened)
(3)DOOR SEALS AND SEALING SURFACES.

The oven should not be adjusted or repaired by anyone except properly qualified service personnel.

This device complies with part 18 of the FCC Rules. (Only for USA)

RADIO INTERFERENCE

- Operation of the microwave oven may cause interference to your radio, TV or similar equipment.
- When there is interference, it may be reduced or eliminated by taking the following measures:

  - Clean door and sealing surface of the oven.
  - Reorient the receiving antenna of radio or television.
  - Relocate the microwave oven with respect to the receiver.
  - Move the microwave oven away from the receiver.
  - Plug the microwave oven into a different outlet so that microwave oven and receiver are on different branch circuits.

UTENSILS

CAUTION

- Personal Injury Hazard

- Tightly-closed utensils could explode. Closed containers should be opened and plastic pouches should be pierced before cooking.
- See the instructions on "Materials you can use in microwave oven or to be avoided in microwave oven."
  There may be certain non-metallic utensils that are not safe to use for microwaving. If in doubt, you can test the utensil in question following the procedure below.

Utensil Test:

- Fill a microwave-safe container with 1 cup of cold water (250ml) along with the utensil in question.
- Cook on maximum power for 1 minute.
- Carefully feel the utensil. If the empty utensil is warm, do not use it for microwave cooking.
- Do not exceed 1 minute cooking time.

SAVE THESE INSTRUCTIONS

IMPORTANT SAFETY INSTRUCTIONS

Read all instructions before using this appliance.

This manual contains important safety symbols and instructions. Please pay at-tention to these symbols and follow all instructions given.

Do not attempt to install or operate your appliance until you have read the safety precautions in this manual. Safety items throughout this manual are labeled with a WARNING or CAUTION statement based on the risk type.

Warnings and important instructions ap-pearing in this guide are not meant to cover all possible conditions and situations that may occur. Common sense, caution, and care must be exercised with installing, maintaining, or operating your appliance.

DEFINITIONS

⚠ This is the safety alert symbol. It is used to alert of potential personal injury hazards. Obey all safety messages that follow this symbol to avoid possible injury or death.

⚠ WARNING

Indicates a potentially hazardous situation which, if not avoided, may result in death or serious injury.

⚠ CAUTION

Indicates a potentially hazardous situation which, if not avoided, may result in minor or moderate injury.

NOTE

Indicates a short, informal reference – something written down to assist the memory or for future reference.

IMPORTANT

Indicates installation, operation or main-tenance information which is important but not hazard-related.

NOTE

ELECTRICAL REQUIREMENTS

Product rating is 120 volts AC, 60 Hertz, 1.5 kilowatts and 13.5 amps.This product must be connected to a seperate and dedicated supply circuit of the proper voltage and frequency. Wire size must conform to the requirements of the National Electrical Code or the prevailing local code for this kilowatt rating. The power supply cord and plug should be brought to a seperate and dedicated 15- to 20-ampere branch circuit single grounded outlet. The outlet box should be located in the cabinet above the microwave oven. The outlet box and supply circuit should be installed by a qualifed electrician and conform to the National Electrical Code or the prevailing local code.

IMPORTANT

1. If you have any questions about the grounding or electrical instructions, consult a qualified electrician or service person.
2. Neither Electrolux nor the dealer can accept any liability for damage to the microwave oven or personal injury resulting from failure to observe the correct electrical connection procedures.

SAVE THESE INSTRUCTIONS

When using electrical appliances basic safety precautions should be followed, including the following:

⚠ WARNING

To reduce the risk of burns, electric shock, fire, injury to persons or exposure to excessive microwave energy:

- Read all instructions before using the appliance.
- Read and follow the specific: "PRECAUTIONS TO AVOID POSSIBLE EXPOSURE TO EXCESSIVE MICROWAVE ENERGY" found on page 3.
- This appliance must be grounded. Connect only to properly grounded outlet. See "GROUNDING INSTRUCTIONS" found on page 6.
- Install or locate this appliance only in accordance with the provided installation instructions.
- Some products such as whole eggs and sealed containers - for example, closed glass jars - are able to explode and should not be heated in this oven.
- Use this appliance only for its intended use as described in the manual. Do not use corrosive chemicals or vapors in this appliance. This type of oven is specifically designed to heat, cook or dry food. It is not designed for industrial or laboratory use.
- HOT CONTENTS CAN CAUSE SEVERE BURNS. DO NOT ALLOW CHILDREN TO USE THE MICROWAVE. Use caution when removing hot items.
- Do not operate this appliance if it has a damaged cord or plug, if it is not working properly, or if it has been damaged or dropped.
- This appliance should be serviced only by qualified service personnel. Contact nearest authorized service facility for examination, repair, or adjustment.
- Do not cover or block any openings on the appliance.
- Do not store this appliance outdoors. Do not use this product near water - for example, near a kitchen sink, in a wet basement, near a swimming pool, or similar location.
- Do not immerse cord or plug in water.
- Keep cord away from heated surface.
- Do not let cord hang over edge of table or counter. When cleaning surfaces of door and oven that comes together on closing the door, use only mild, nonabrasive soaps, or detergent applied with a sponge or soft cloth.
- To reduce the risk of fire in the oven cavity:
  - Do not overcook food. Carefully attend appliance when paper, plastic, or other combustible materials are placed inside the oven to facilitate cooking.
  - Remove wire twist-ties from paper or plastic bag before when placing bag in oven.
  - If material inside of the oven ignite, keep oven door closed, turn oven off, and disconnect the power cord, or shut off power at the fuse or circuit breaker panel.
  - Do not use the cavity for storage purposes. Do not leave paper products, cooking utensils, or food in the cavity when not in use.
- Liquids, such as water, coffee, or tea are able to be overheated beyond the boiling point without appearing to be boiling. Visible bubbling or boiling when the container is removed from the microwave oven is not always present. THIS COULD RESULT IN VERY HOT LIQUID SUDDENLY BOILING OVER WHEN THE CONTAINER IS DISTURBED OR A UTENSIL IS INSERTED INTO THE LIQUID. To reduce the risk of injury to persons:
- Do not overheat the liquid.
- Stir the liquid both before and halfway through heating it.
- Do not use straight-sided containers with narrow necks.
- After heating, allow the container to stand in the microwave oven for a short time before removing the container.
- Use extreme care when inserting a spoon or other utensil into the container.
- Oversized food or oversized metal utensils should not be inserted in a microwave oven as they may create a fire or risk of electric shock. Do not clean with metal scouring pads. Pieces can burn off the pad and touch electrical parts involving a risk of electric shock.
- Do not store any materials, other than manufacturer's recommended accessories, in this oven when not in use.
- Do not cover racks or any other part of the oven with metal foil. This will cause over- heating of the oven.
- Clean Ventilation Hoods Frequently -Grease should not be allowed to accumulate on hood or filter.
- When flaming foods under the hood, turn the fan on.
- Use care when cleaning the vent-hood filter. Corrosive cleaning agents, such as lye-based oven cleaners, may damage the filter.
- Suitable for use above both gas and electric cooking equipment.

SAVE THESE INSTRUCTIONS

GROUNDING INSTRUCTIONS

This appliance must be grounded. In the event of an electrical short circuit, grounding reduces the risk of electric shock by providing an escape wire for the electric current. This appliance is equipped with a cord having a grounding wire with a grounding plug. The plug must be plugged into an outlet that is properly installed and grounded.

WARNING

Improper use of the grounding can result in a risk of electric shock.

Consult a qualified electrician or serviceman if the grounding instructions are not completely understood, or if doubt exists as to whether the appliance is properly grounded. If it is necessary to use an extension cord, use only a 3-wire extension cord that has a 3-blade grounded plug, and 3-slot receptacle that will accept the plug on the appliance.The marked rating of the extension cord shall be equal to or greater than the electrical rating of the appliance.

IMPORTANT

1. If you have any questions about the grounding or electrical instructions, consult a qualified electrician or service person.
2. Neither Electrolux nor the dealer can accept any liability for damage to the microwave oven or personal injury resulting from failure to observe the correct electrical connection procedures.

DANGER

Electric Shock Hazard

Touching some of the internal components can cause serious personal injury or death. Do not disassemble this appliance.

WARNING

Electric Shock Hazard

Improper use of the grounding can result in electric shock. Do not plug into an outlet until appliance is properly installed and grounded.

- A short power supply cord is provided to reduce the risks resulting from becoming entangled in or tripping over a longer cord.
- Longer cord sets or extension cords are available and may be used if care is exercised in their use.
- If a long cord or extension cord is used:
  - The marked electrical rating of the cord set or extension cord should be at least as great as the electrical rating of the appliance.
  - The extension cord must be a grounding-type 3-wire cord.
  - The longer cord should be arranged so that it will not drape over the counter top or tabletop where it can be pulled on by children or tripped over unintentionally.

SAVE THESE INSTRUCTIONS

Materials you can use in microwave oven

Browning dish	Follow manufacturer instructions. The bottom of browning dish must be at least 3/16 inch (5mm) above the turntable. Incorrect usage may cause the turntable to break.
Dinnerware	Microwave-safe only. Follow manufacturer's instructions. Do not use cracked or chipped dishes.
Glass jars	Always remove lid. Use only to heat food until just warm. Most glass jars are not heat resistant and may break.
Glassware	Heat-resistant oven glassware only. Make sure there is no metallic trim. Do not use cracked or chipped dishes.
Oven cooking bags	Follow manufacturer instructions. Do not close with metal tie. Make slits to allow steam to escape.
Paper plates and cups	Use for short term cooking/warming only. Do not leave oven unattended while cooking.
Paper towels	Use to cover food for reheating and absorbing fat. Use with supervision for a short-term cooking only.
Parchment paper	Use as a cover to prevent splattering or a wrap for steaming.
Plastic	Microwave-safe only. Follow the manufacturer instructions. Should be labeled "Microwave Safe". Some plastic containers soften, as the food inside gets hot. "Boiling bags" and tightly closed plastic bags should be slit, pierced or vented as directed by package.
Plastic wrap	Microwave-safe only. Use to cover food during cooking to retain moisture. Do not allow plastic wrap to touch food.
Thermometers	Microwave-safe only (meat and candy thermometers).
Wax paper	Use as a cover to prevent splattering and retain moisture.

Materials to be avoided in microwave oven

Aluminum tray	May cause arcing. Transfer food into microwave-safe dish.
Food carton with metal handle	May cause arcing. Transfer food into microwave-safe dish.
Metal or metal-trimmed utensils	Metal shields the food from microwave energy. Metal trim may cause arcing.
Metal twist ties	May cause arcing and could cause a fire in the oven.
Paper bags	May cause a fire in the oven.
Plastic foam	Plastic foam may melt or contaminate the liquid inside when exposed to high temperature.
Wood	Wood will dry out when used in the microwave oven and may split or crack.

NAMES OF OVEN PARTS AND ACCESSORIES

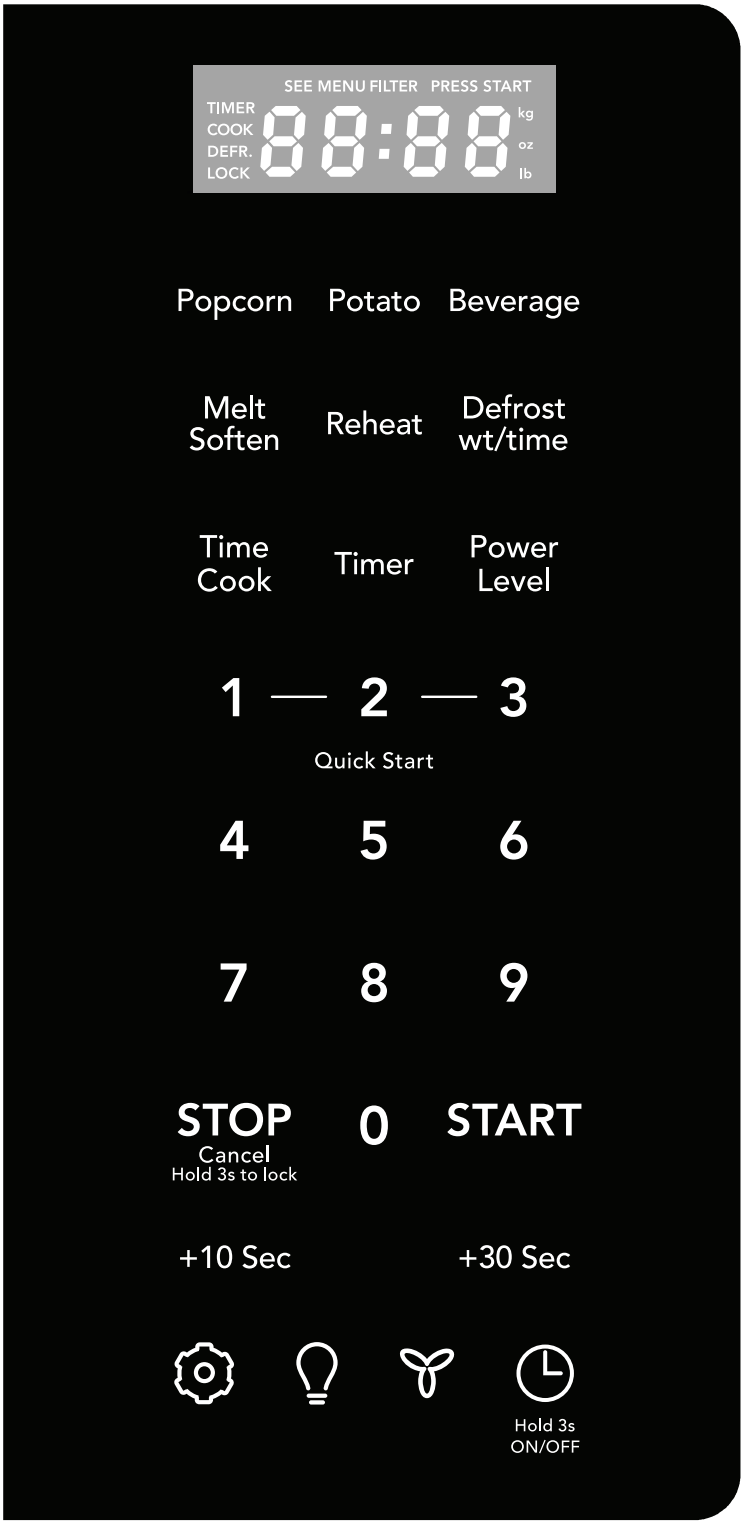

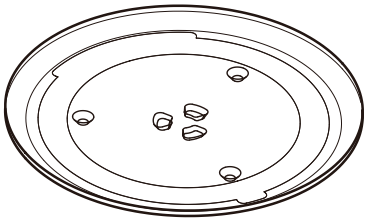

Glass turntable

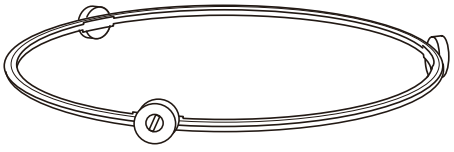

Turntable Ring Assembly

SETTINGS

- The microwave oven has settings that allow you to customize the operation for your convenience. Below is the table showing the various settings. Press the ⚙ key multiple times to scroll to the desired setting function.

Key press	Option
1. ⚙ OP-1	Sound Lo/nor/Hi/off
2. ⚙ OP-2	Weight (lbs/kg)
3. ⚙ OP-3	on yes/off yes/reset yes/reset no
4. ⚙ OP-4	Demo Mode (on/off)

SETTING THE CLOCK

Example: setting clock display for 9:00:

1. Press Hold 3s ON/OFF pad once. — Hold 3s ON/OFF
2. Enter time using number pads. — 9 0 0
3. Press START pad. — START

SETTING THE CLOCK ON/OFF

Clock Display OFF.

1. Press Hold 3s ON/OFF and hold pad . — Hold 3s ON/OFF
2. Time will display, after 3s, oFF will display. — oFF

Clock display ON default.

1. Hold Clock button 3s, display is on. — Hold 3s ON/OFF
2. When display is on, tap (short press) will display time for 3 sec. — on

SETTING THE TIMER

Example: setting timer for 5 minutes:

1. Press Timer pad once. — Timer
2. Enter desired time using number pads. — 5 0 0
3. Press Timer pad. — Timer

Timer count down does not stop even if the door is opened. To stop/cancel the timer, press the Timer key once . When the timer has reached the end of set time, you will hear beep alerts indicating the timer has run out.

NOTE

The display will return to default after 15 minutes if a cooking cycle is stopped and not restarted.

EXHAUST HIGH / LOW / OFF

The exhaust ventilation removes steam and other cooking vapors from the cooking surface of the range below the microwave oven.

To operate the exhaust vent, Press the Exhaust High/Low/Off pad once for the highest speed setting. Press the pad again to choose the Low speed setting and a 3rd time to turn the exhaust ventilation off.

NOTE

If the temperature gets too hot around the microwave oven, the fan in the exhaust vent hood will automatically turn on at the LOW setting to cool the oven. The fan will automatically turn off when the internal parts are cool. When this occurs, the vent cannot be turned off.

SURFACE LIGHT ON / OFF

Press the Surface Light On/Off pad once to turn on the surface light. Press the pad again to turn the light off.

CONTROL LOCK

You may lock the control panel to prevent the microwave from being accidentally started or used by children.
The control lock feature is very useful when cleaning the control panel. The lock will prevent accidental programming when wiping the control panel clean.

Example: to set the control lock ON:

Press and hold the Stop/Cancel pad for more than 3 seconds. The Lock icon will appear in the display window along with 1 beep.	STOP Cancel Hold 3s to lock

Example: to change the control lock from ON to OFF:

Press and hold the Stop/Cancel pad for more than 3 seconds. The Lock icon will disappear in the display window.	STOP Cancel Hold 3s to lock

USING READY SET

1 2 3

Microwave heating or cooking may be quickly set at 100%power level for 1, 2 or 3 minutes. Use the number keys 1, 2 or 3 to choose the desired minutes of cook time (this option will only work using the 1, 2 or 3 numeric pads):

Example: to quickly heat for 2 minutes at 100% power:

Press number pads 2 for desired minutes of cook time.	2

NOTE

the Ready Set function cannot be set when using the Defrost (by weight) feature.

NOTE

“Food” will be displayed if a quick start cooking cycle is not selected within 5 minutes of placing food in the microwave. You must open then close the door again to clear "Food" from the display.

HEATING WITH HIGH POWER LEVEL

Example: to heat for 5 minutes at 100% power:

1. Press Time Cook pad.	Time Cook
2. Use the number pads to enter desired heating time (cook time may be set up to 99 minutes and 99 seconds).	5 0 0
3. Press START pad.	START

When heating has finished you will hear beeps and "End" will display.

HEATING WITH LOWER POWER LEVELS

Using the highest power level to heat foods with does not always give the best results when some types of food need slower cooking, such as roasts, baked goods or custards. Your oven has nine other power levels you may choose.

Example: to heat for 4 minutes at 70% power:

1. Press Time Cook.	Time Cook
2. Use the number pads to enter desired heating time (cook time may be set up to 99 minutes and 99 seconds).	4 0 0
3. Press Power Level pad once for power level 10 (100% power).	Power Level
4. Use the number key to change the power level to 7. P-70 appears in the display (70 % power).	7
5. Press START pad.	START

When heating has finished you will hear beeps and "End" will display.

HEATING WITH MULTIPLE COOKING STAGES

For best results, some microwave recipes call for different power levels or different lengths of time for cooking. Your microwave may be set to change from one stage to another automatically (2 stages maximum).

Example: to cook food for 3 minutes at 80% power and then 50% power for 6 minutes 30 seconds:

1. Press TimeCook.	Time Cook
2. Use the number pads to enter heating time for the 1st stage (cook time may be set up to 99 minutes and 99 seconds).	3 0 0
3. Press Power Level pad once.	Power Level
4. Use the number keys to enter power level for the 1st stage. P-80 appears in the display (80 % power).	8
5. Press Time Cook pad for 2nd stage.	Time Cook
6. Use the number pads to enter heating time for the 2nd stage (cook time may be set up to 99 minutes and 99 seconds).	6 3 0
7. Press Power Level pad for 2nd stage.	Power Level
8. Use the number key to enter power level for the 2nd stage. P-50 aappears in the display (50 % power).	5
9. press START pad.	START

When heating has finished you will hear beeps and "End" will display.

NOTE

When heating has finished you will hear beeps and "End" will display.

USING THE STOP/CANCEL KEY

This feature will let you quickly stop or cancel the cooking process.

Press the Stop/Cancel pad to:	STOP Cancel Hold 3s to lock
1. Erase if you have entered wrong information.	
2. Cancel timer setting process.	
3. Press pad once to pause the oven temporarily during cooking. (Press START pad again to resume cooking.)	START
4. Return the time of day (clock) to the display after cooking cycle is completed.	
5. Cancel a program during cooking, press twice.	

USING THE +10 SEC /+ 30 SEC KEY

This feature will let you quickly start or add 10 or 30 seconds

Press the +10 sec/+30 sec pad to: +10 Sec / +30 Sec

1. Start programmed cooking.
2. Start cooking for 10 seconds/30 seconds at 100% power level.
3. Extend cooking time in multiples of 10 seconds/30 seconds each time this pad is pressed during microwave cooking.

Example: to add 1 minute of cook time during 100% microwave cooking :

Press +30 pad twice. +30 Sec

NOTE

"Food" will be displayed if a quick start cooking cycle or + 10 Sec/+30 Sec key is pressed more than 5 minutes after the door of microwave oven is closed. You must open then close the door again to clear "Food" from the display.

SETTING DEFROST (BY WEIGHT)

Example: to defrost 1lb. of food with the default power level and cook time determined automatically:

1. Press Defrost wt/time pad once. 0.0 will appear in the display. — Defrost wt/time
2. Use the numeric pads to input weight of food to defrost in pounds (10 = 1.0lb.) You may enter any weight from 0.1 to 6.0lbs. — *1 0*
3. Press START pad. — START

When defrosting has finished you will hear beeps and "End" will display.

NOTE

The weight amount must be a valid entry for this feature to start. A valid weight entry is 0.1 to 6.0 pounds.

SETTING DEFROST (BY TIME)

Example: to defrost food with the default 30% power level for 5 minutes:

1. Press Defrost wt/time pad twice. 0.00 will appear in the display. — Defrost wt/time
2. Use the number pads to enter desired defrost time (defrost time may be set up to 99 minutes and 99 seconds). — *5 0 0*
3. Press START pad. — START

When heating has finished you will hear beeps and "End" will display.

NOTE

Power levels cannot be changed for both defrost (by weight) or defrost (by time) because the defrost performance will be adversely affected.

SPECIAL NOTES FOR DEFROSTING BY TIME

- After pressing START key, the display will count down remaining defrost time. The oven will beep during the defrost cycle. At this time open the door and turn the food if needed and remove any portions that have already thawed. Press the START key to resume the defrost cycle.
- When heating has finished you will hear beeps.

DEFROSTING TIPS

- When using the defrost weight feature, the weight entered should always be pounds (valid entries are from 0.1 to 6.0 pounds).
- Use both defrost weight and defrost time features for raw food items only. Defrosting gives best results when food to be thawed is a minimum of 0°F (taken directly from a true freezer). If the food has been stored in a refrigerator-freezer that does not maintain a temperature of 5° F or below, always program a lower food weight or lower cook time to prevent cooking the food.
- If the frozen food is stored outside the freezer for up to 20 minutes, enter a reduced cook time or weight.
- The shape of the package will alter the defrosting time. Shallow rectangular food packets defrost more quickly than a deep frozen block of food.
- Separate pieces as they begin to defrost. Separated frozen pieces of food defrost better.
- Shield warm areas of food with small pieces of foil if they start to become warm.
- You may use small pieces of aluminum foil to shield food items like chicken wings, leg tips and fish tails, but do not allow the foil to touch the oven cavity walls when defrosting.

DEFROSTING SUGGESTIONS FOR MEATS

For best results, please read these suggestions when defrosting meats.

Meat	Normal amount	Suggestions
Roast beef or pork	2.5 to 6 lbs. (40 to 96 oz.)	Start with the food placed fat side down. After each stage, turnth the food over and shield any warm portions wi narrow strips of aluminum foil. Let stand, covered for 15-30 minutes.
Steaks, chops or fish	0.5 to 3 lbs (8 to 48 oz.)	After each stage, rearrange the food. If there are any warm or thawed portions of food, shield them with narrow flat pieces of aluminum foil. Remove any pieces of food that are nearly defrosted. Let stand, covered for about 5 to 10 minutes.
Ground meat	0.5 to 3 lbs (8 to 48 oz.).	After each stage, remove any pieces of food that are nearly defrosted. Let stand, covered with foil for 5 to 10 minutes.
Whole chicken	2.5 to 6 lbs. (40 to 96 oz.)	Remove giblets before freezing poultry. Start defrosting with the breast side down. After the 1st stage, turn the chicken over and shield any warm portions with narrow strips of aluminum foil. After the 2nd stage, again shield any warm portions with narrow strips of aluminum foil. Let stand, covered, for 30 to 60 minutes in the refrigerator.
Chicken pieces	0.5 to 3 lbs. (8 to 48 oz.)	After each stage, rearrange or remove any pieces of food that are nearly defrosted. Let stand for 10-20 minutes.

REHEAT

The reheat feature provides 3 quick preset settings based on serving size to reheat food for your cooking convenience.

Example: to reheat 24 ounces of food.

1. Press Reheat pad 3 times (see reheat category table) to reheat 24oz. of food. 24oz will appear in the display. — Reheat
2. Press START pad. — START

Reheat Category	Press	Display
8 ounces of food	once	8 oz
16 ounces of food	twice	16 oz
24 ounces of food	3 times	24 oz

MELT/ SOFTEN

The oven uses low power to melt and soften items. See the following table.

Example: to melt 8 oz. of Cream Cheese.

1. Press Melt/Soften pad 4 times to reheat 8oz. of food. So-4 will appear in the display (see Melt/Soften category table). — Melt Soften
2. Then press 2 number pad, weight will appear in the display .
3. Press START pad. — START

MELT / SOFTEN CATEGORY

PRESS	DIS PLAY	CATE GORY	AMOUNT	KEY
Melt Soften x 1	So-1	BUTTER	1 stick 2 sticks	1 2
Melt Soften x 2	So-2	CHOCO LATE	2 oz. 4 oz. 8 oz.	1 2 3
Melt Soften x 3	So-3	ICE CREAM	1 Pint 1.5 Quart	1 2
Melt Soften x 4	So-4	CREAM CHEESE	3 oz. 8 oz.	1 2

SUGGESTED POWER LEVELS FOR COOKING

The 10 power levels available with this microwave will help you to adjust to the power output best suited for the food type you are preparing. As with any food preparation in the microwave, it is best to follow the microwave instructions that are printed on food packaging.

The table below provides suggested power levels for various types of food that you can be prepare in the microwave.

Power level	Microwave output	Use to prepare when:
10 High	100 %	• Boiling water. • Cooking ground beef. • Making candy. • Cooking fresh fruits & vegetables • Cooking fish & poultry. • Preheating browning dish. • Reheating beverages. • Cooking bacon slices.
9	90 %	• Reheating meat slices quickly. • Saute onions, celery & green peppers.
8	80 %	• All reheating. • Cooking scrambled eggs.
7	70 %	• Cooking breads & cereal products. • Cooking cheese dishes & veal. • Cakes, muffins, brownies & cupcakes.
6	60 %	• Cooking pasta.
5	50 %	• Cooking meats & whole poultry. • Cooking custard. • Cooking spare ribs, rib roast & sirloin roast.
4	40 %	• Cooking less tender cuts of meat. • Reheating frozen packaged foods.
3	30 %	• Thawing meat, poultry & seafood. • Cooking small quantities of food. • Finish cooking casseroles, stew & some sauces.
2	20 %	• Softening butter & cream cheese. • Heating small amounts of food.
1	10 %	• Softening ice cream. • Raise yeast dough.

SUGGESTIONS FOR GETTING THE BEST RESULTS

To help you achieve the best possible results from your microwave oven, read the following suggestions below;

- **Storage temperature**
  Foods taken from the freezer or refrigerator take longer to cook than the same foods would at room temperature.

- **Size**
  Small pieces of food cook faster than large ones. Pieces similar in size and shape will cook more evenly when cooked together. For more even results, reduce the power levels when cooking large pieces of food.
- **Natural moisture**
  Very moist foods cook more evenly because microwave energy heats water molecules very efficiently.
- **Stirring**
  Stir foods such as casseroles and vegetable from the outside to the center to distribute the heat more evenly. This will allow the food to cook faster. Constant stirring is not necessary.
- **Turn over items**
  Turn over foods such as pork chops, roasts or whole cauliflower halfway through the cook time. This will help to expose all sides equally to microwave energy.
- **Food placement**
  Place delicate areas of food items, such as asparagus tips, toward the center of the turntable tray.
- **Food arrangement**
  Arrange unevenly shaped foods, such as chicken pieces or salmon, with the thicker or meatier parts toward the outside of the turntable tray.
- **Let the food stand**
  After removing the food from the microwave, cover the food with foil or a casserole lid and let it stand to finish cooking. This will help the food finish in the center and avoids overcooking the out edges, The length of stand time depends on the density and surface area of the food items.
- **Wrapping in paper towels or waxed paper**
  Sandwiches and many other food types containing pre-baked bread should be wrapped prior to placing in the microwave to help prevent the food items from drying out while heating.

POPCORN

⚠ CAUTION

DO NOT leave microwave oven unattended while popping corn.

The popcorn feature lets you pop 3 different commercially packaged microwave popcorn sized bags. Use the table below to determine the setting to use.

Amount	Press popcorn pad
3.3 oz. (default setting)	once
3.0 oz.	2 times
1.75 oz.	3 times

Example: to pop a 3.0 oz. bag of popcorn automatically.

1. Press Popcorn pad 2 times. — Popcorn
2. Press START pad.
   The microwave will beep when finished. — START

POTATO

The potato feature cooks 1, 2 , 3 or 4 (cooking times based on 8 to 36 oz.) potatoes automatically. Use the table below to determine the setting to use.

Amount	Press potato pad
1 potato (default setting)	once
2 potatoes	2 times
3 potatoes	3 times
4 potatoes	4 times

Example: to heat 1 cup of a beverage.

1. Press Potato pad once. — Potato
2. Press START pad. — START

   The microwave will beep when finished.

NOTE

- Before cooking, pierce potatoes with fork several times.
- After cooking, let potatoes stand for 5 minutes.

BEVERAGE

The beverage feature heats 1 or 2 cups of beverage. Use the table below to determine the setting to use.

Amount	Press beverage pad
1 cup (about 8 oz.)	once (default setting)
2 cups (about 16 oz.)	2 times

Example: to heat 1 cup of a beverage.

1. Press Beverage pad once. Beverage
2. Press START pad. START

The microwave will beep when finished.

CONVENIENCE COOKING SUGGESTIONS

Convenience category	Amount	Suggestions
Popcorn	1.75,3.0, 3.3 oz. 1 pkg.	Cook a single "microwave-only" bag of popcorn at a time. Use caution when removing and opening the hot popcorn bag from the oven. Let microwave oven cool down at least 5 minutes before using again.
Potato	1,2,3,4 potatoes 8,16, 24,36 oz	Pierce each potato several times using a fork. Place on turntable in spoke-like fashion. After cooking, let stand for 3-5 minutes. Let oven cool for at least 5. minutes before using again. Use the START pad to increase cook time for larger potatoes.
Beverage	1,2 cups (8 oz, 16 oz)	Use a microwave-safe measuring cup or mug; do not cover. Place the beverage in the microwave. After heating, stir well. Let oven cool for at least 5 minutes before using again. Beverages heated with the beverage category may be very hot. Remove the container with care.

SETTING THE SOUND

Turning Sound Low/nor/Hi/Off

Audible signals are available to guide you when setting and using your oven.

- will sound each time you touch a pad.
- Two tones signal the end of a Kitchen Timer count down.
- Two tones signal the end of a cooking cycle.

Example: setting audible signal off:

1. Press ⚙ pad one. ⚙
2. op-1 will display and the START needs to be pressed to select. START
3. Lo/ nor/ HI /oFF auto scrolls every 2 seconds through each selection.
4. Press START pad to confirm when the LED shows oFF. START

NOTE

When the cooking cycle is completed END will be displayed and the audible signal will sound if the sound is turned on.

SETTING WEIGHT IB/KG

Example: setting weight between pounds & kilograms:

1. Press pad 2 times .
2. op-2 will display and the START needs to be pressed to select. **START**
3. lb/kg auto scrolls every 2 seconds through each selection.
4. Press START pad to confirm your selection. **START**

NOTE

If the display shows kg, pressing the START button will select the oven controls to kg.

SETTING THE FILTER

Example: setting the filter on:

1. Press pad 3 times .
2. op-3 will display an d the START needs to be pressed to select. **START**
3. on yes/oFF yes/rest yes/rest no auto scrolls every 2 seconds through each selection.

On yes	Filter indicator light on by default for recirculation. The filter indicator light will track the vent fan on time.
Off yes	Turn off the filter indicator light when vented to outside. The filter indicator light will not track the vent fan on time.
Rest yes	Reset Filter Indicator The filter indicator light on the display will track the vent fan on time. When it is time to change the charcoal filter the indicator light on the display will come on. Once the charcoal filter is changed, use reset yes to turn filter indicator off and begin new time for charcoal filter replacement.
Rest no	Will not reset the time for filter indicator light.

4. Press START pad to confirm the LED shows on. **START**

SETTING DEMO MODE

Example: setting the demo mode on:

Suppose you want to enter Demo mode. When Demo mode is ON programming functions will work in a rapid countdown mode with no cooking power.

1. Press pad 4 times .
2. op-4 will display and the START needs to be pressed to select. **START**
3. on/oFF auto scrolls every 2 seconds through each selection.
4. Press START pad to confirm when the display shows on. **START**

NOTE

If the display shows oFF, pressing the START button will select the demo mode off.

Troubleshooting

Check your problem by using the chart below and try the solutions for each problem. If the microwave oven still does not work properly, contact the nearest authorized service center.

TROUBLE	POSSIBLE CAUSE	POSSIBLE REMEDY
Oven will not start	• Electrical cord for oven is not plugged in. • Door is open. • Wrong operation is set.	• Plug into the outlet. • Close the door and try again. • Check instructions.
Arcing or sparking	• Materials to be avoided in microwave oven were used. • The oven is operated when empty. • Spilled food remains in the cavity.	• Use microwave-safe cookware only. • Do not operate with oven empty. • Clean cavity with wet towel.
Unevenly cooked foods	• Materials to be avoided in microwave oven were used. • Food is not defrosted completely. • Cooking time, power level is not suitable. • Food is not turned or stirred.	• Use microwave-safe cookware only. • Completely defrost food. • Use correct cooking time, power level. • Turn or stir food.
Overcooked foods	• Cooking time, power level is not suitable.	• Use correct cooking time, power level.
Undercooked foods	• Materials to be avoided in microwave oven were used. • Food is not defrosted completely. • Oven ventilation ports are restricted. • Cooking time, power level is not suitable.	• Use microwave-safe cookware only. • Completely defrost food. • Check to see that oven ventilation ports are not restricted. • Use correct cooking time, power level.
Improper defrosting	• Materials to be avoided in microwave oven were used. • Cooking time, power level is not suitable. • Food is not turned or stirred.	• Use microwave-safe cookware only. • Use correct cooking time, power level. • Turn or stir food.

Disconnect the power cord or leave the door open to deactivate the oven during cleaning. Disconnect the power cord before replacing filters and lights.

EXTERIOR

The outside surface is precoated steel and plastic. Clean the outside with mild soap and water; rinse and dry with a soft cloth. Do not use any type of household or abrasive cleaner.

DOOR

Wipe the window on both sides with a soft cloth to remove any spills or spatters. Metal parts will be easier to maintain if wiped frequently with a soft cloth. Avoid the use of spray and other harsh cleaners as they may stain, streak or dull the door surface.

EASY CARE™ STAINLESS STEEL / SMUDGE _PRO OF™ STAINLESS STEEL / BLACK STAINLESS STEEL(SOME MODELS)

Your microwave oven(some models) may have a Stainless Steel finish or coating. Clean the stainless with warm soapy water using a clean sponge or cloth. Rinse with clean water and dry with a soft clean cloth. DO NOT use ANY store bought cleaners like Stainless Steel cleaners or any other types of cleaners containing any abrasive, chlorides, chlorines or ammonia. It is recommended to use mild dish soap and water or a 50/50 solution of water and vinegar.

TOUCH CONTROL PANEL

Care should be taken in cleaning the touch control panel. If the control panel becomes soiled, open the microwave oven door before cleaning. Wipe the panel with a cloth dampened slightly with water only. Dry with a soft cloth. Do not scrub or use any sort of chemical cleaners. Close door and touch STOP/Cancel

INTERIOR

Cleaning is easy because little heat is generated to the interior surfaces . To clean the interior surfaces, wipe with a soft cloth and warm water. DO NOT USE ABRASIVE OR HARSH CLEANERS OR SCOURING PADS. For heavier soil, use baking soda or a mild soap; rinse thoroughly with hot water. The round wire rack and shelf can be cleaned with hot soapy water, rinsed and dried.

WAVEGUIDE COVER

The waveguide cover is located on the right side in the microwave oven cavity. It is made from mica so requires special care. Keep the waveguide cover clean to assure good microwave oven performance. Carefully wipe with a damp cloth any food spatters from the surface of the cover immediately after they occur. Built-up splashes may overheat and cause smoke or possibly catch fire. DO NOT REMOVE THE WAVEGUIDE COVER.

ODOR REMOVAL

Occasionally, a cooking odor may remain in the microwave oven. To remove, combine 1 cup water, grated peel and juice of 1 lemon in a 2-cup glass measuring cup.
Boil for several minutes using 100% power. Allow to set in microwave oven until cool. Wipe interior with a soft cloth.

TURNTABLE/TURNTABLE SUPPORT

The turntable and turntable support can be removed for easy cleaning. Wash them in mild, sudsy water; for stubborn stains use a mild cleanser and non-abrasive scouring sponge. They are also dishwasher-proof. Use upper wirerack of dishwasher. The turntable motor shaft is not sealed, so excess water or spills should be wiped up immediately.

Disconnect the power cord or leave the door open to deactivate the oven during cleaning. Disconnect the power cord before replacing filters and lights.

CLEANING THE EXHAUST FILTERS

The oven ventilation exhaust filters should be removed and cleaned often; generally at least once every month.

Vent exhaust filter part number 5304478913
To order parts call 800-599-7569

⚠ CAUTION

To avoid risk of person al injury or pro perty damage, do not operate oven hood without filters properly in place.

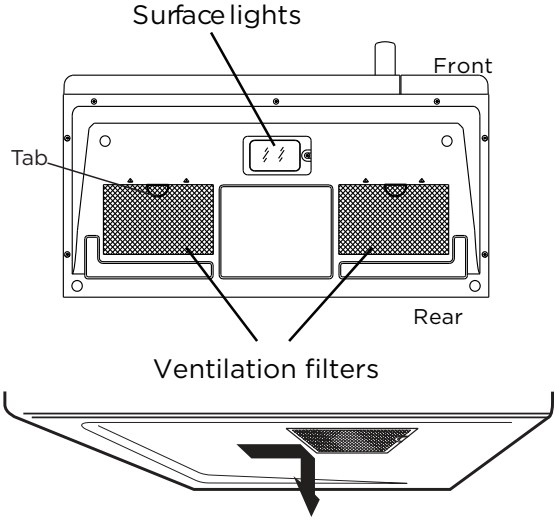

- To remove the exhaust ventilation filters, slide the filter to the rear. Then pull filter downward and push to the other side. The filter will drop out. Repeat for the 2nd filter.

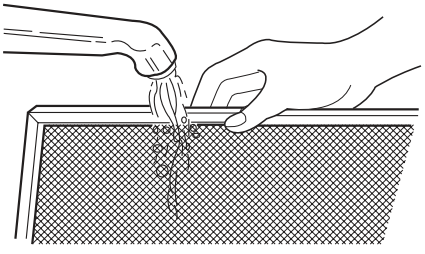

- Soak the ventilation filters in hot water using a mild detergent. Rinse well and shake to dry or wash in a dishwasher. Do not use ammonia. The aluminum on the filter will corrode and darken.

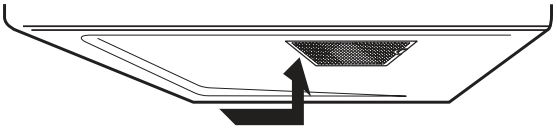

- To reinstall the exhaust ventilation filter, slide it into the side slot, then push up and toward oven to lock.
  Reinstall the 2nd filter using the same procedure.

SURFACE LIGHT REPLACEMENT

⚠ CAUTION

To avoid risk of personal injury or property damage, wear gloves when replacing the light bulbs.

- Unplug the microwave oven or turn off power at the main circuit breaker.
- Remove the LED light cover mounting screw under the microwave.

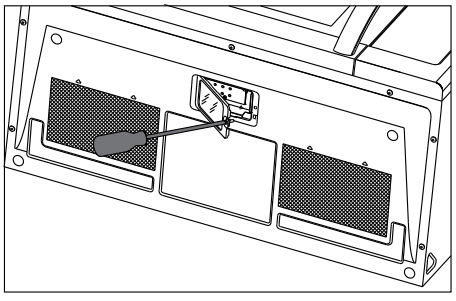

- Remove the LED light mounting screw.

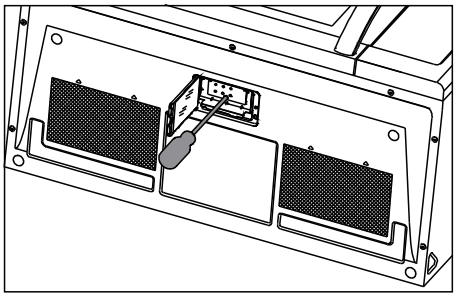

Disconnect the power cord or leave the door open to deactivate the oven during cleaning. Disconnect the power cord before replacing filters and lights.

- Unplug the LED light from the harness, replace with part 5304499540.To order parts call 800-599-7569.Then reconnect the harness.

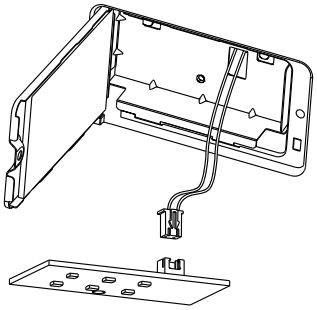

- Re-install LED light and mounting screw. When re-installing mounting screw be careful not to damage the LED light.
- Re-install LED light cover and mounting screw.
- Plug the microwave back into the power supply or turn the power back on at the main circuit breaker.

CHARCOAL FILTER REPLACEMENT

Charcoal filter part number FRPAMRAF
To order parts call 800-599-7569

Charcoal Filter when installed in your microwave oven, is used for nonvented, recirculated Installation. When it is time to replace the charcoal filter, the FILTER light on display will turn on. If your microwave is vented to the outside, then you can turn off the filter light in the settings.

- Disconnect power to the microwave oven at the circuit breaker panel or by unplugging.
- Press the " Push" position on the cover.
- And then open the cover.

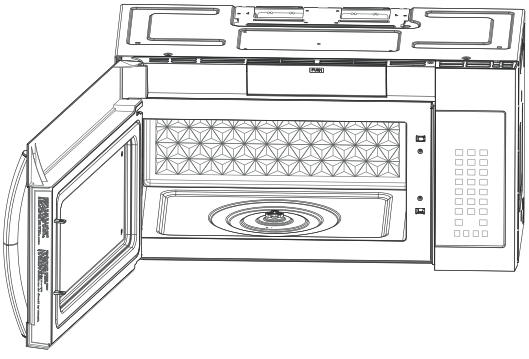

- Remove the charcoal filter by pushing the top of the filter inwards, then pull it forward out from the unit.

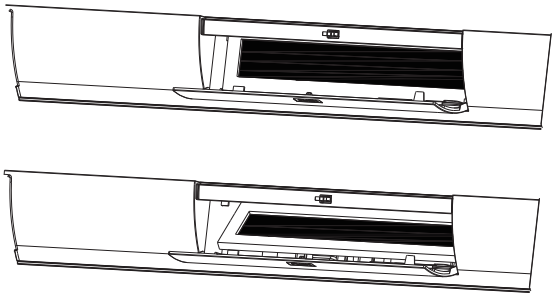

- Slide the top of the new charcoal filter into the top area of the filter cavity.

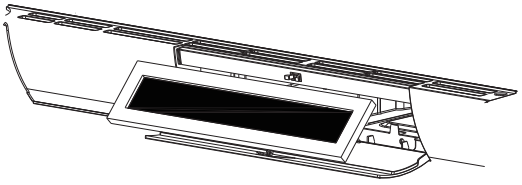

- Press the bottom of charcoal filter to place it into the correct position.

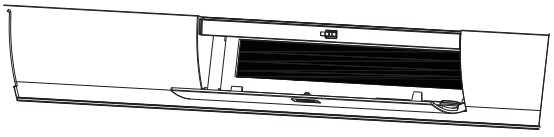

- Press the "Push" to close the cover.

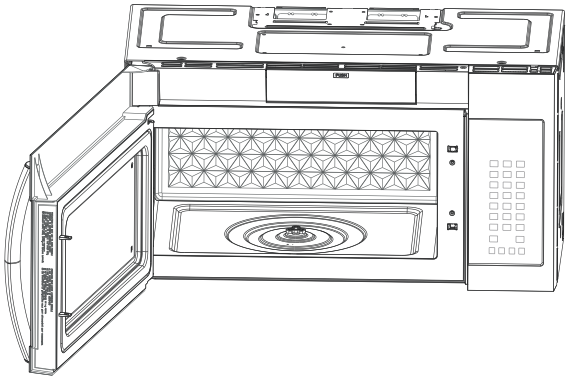

Disconnect the power cord or leave the door open to deactivate the oven during cleaning. Disconnect the power cord before replacing filters and lights.

OVEN LIGHT REPLACEMENT

Remove the vent grill (see steps 1-4 in charcoal filter replacement section.

- Remove the screw and remove the lamp cover.

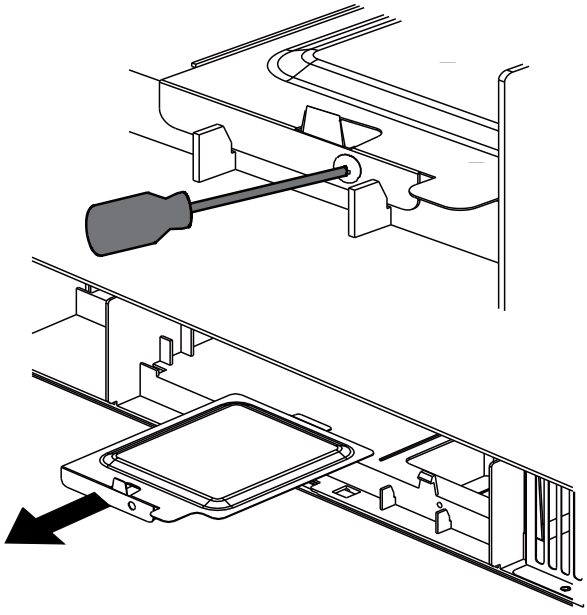

- Remove the LED bracket and light assembly. Remove the LED light from the bracket by removing the mounting screw and replace only with part 5304499540.
  To order parts call 800-599-7569.

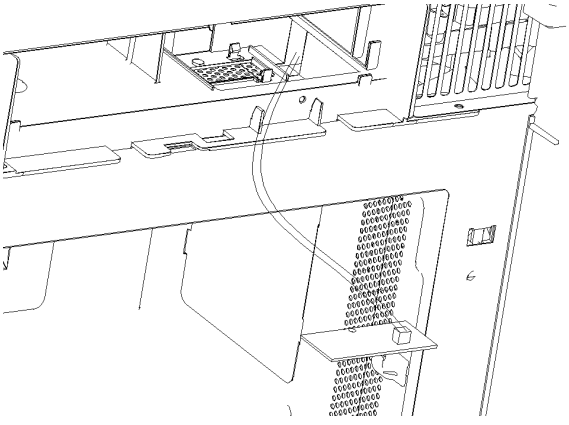

- Re-install LED light to the bracket with mounting screw.
  When re-installing mounting screw be careful not to damage the LED light.

- Reconnect LED light to the harness and place the LED light assembly back into the plastic housing.

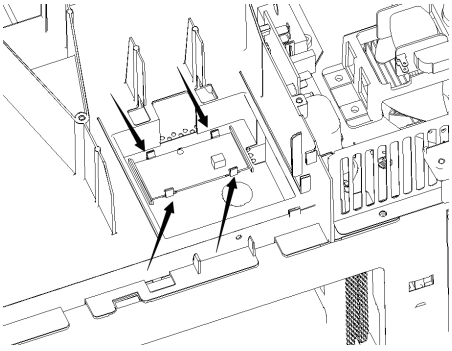

- Replace the microwave oven light cover by carefully pushing into place (make sure the light cover rear tab is inserted into slot at rear), replace the screw.

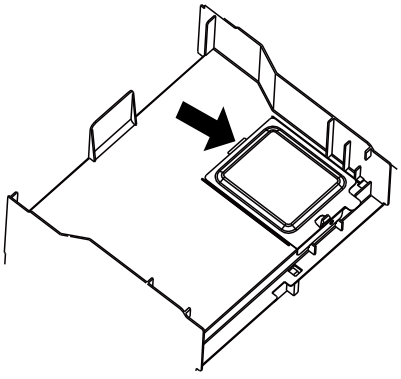

- Replace the charcoal filter (if installed).
  Push the vent grill back into place (engaging both the bottom and top tabs) and replace the vent grill mounting screws.

SERVICE CALL CHECK

Please check the following before calling for service:

Place one cup of water in a glass measuring cup in the microwave oven and close the door securely. Operate the microwave oven for one minute at HIGH 100%.

A	Does the microwave oven light come on?	YES ____ NO ____
B	Does the cooling fan work? (Put your hand at top above Display.)	YES ____ NO ____
C	Does the turntable rotate? (It is normal for the turntable to turn in either direction.)	YES ____ NO ____
D	Is the water in the microwave oven warm?	YES ____ NO ____

If "NO" is the answer to any of the above questions, please check electrical outlet, fuse and/or circuit breaker. If they are functioning properly, CONTACT YOUR NEAREST ELECTROLUX AUTHORIZED SER-VICER.
A microwave oven should never be serviced by a "do-it-yourself" repair person.

NOTE

1. If time appearing in the display is counting down very rapidly, check Demonstration Mode on page 20.
2. If the oven is set for more than 30 minutes at 90 or 100 percent power level, after the fi rst 30 minutes the power level will automatically adjust itself to 80 percent power to avoid overcooking.

SPECIFICATIONS

AC Line Voltage:	Single phase 120V, 60Hz, AC only
AC Power Required:	1500W 13.5 amps.
Output Power*:	1000 W
Frequency:	2450 MHz (Class B/Group2)**
Outside Dimensions (including handle):	29 .88 " (W) x 15.04 " (D) x 16.41 " (H)
Cavity Dimensions:	19.84 "(W) x 13.78 "(D) x 9.09 "(H)
Microwave oven Capacity***:	1.8 Cu.Ft.
Cooking Uniformity:	Turntable
Weight:	Approx. (net) 55.2 lbs, (gross) 60.7 lbs
Work/Night Light:	1*1.2W LED, the part number is 5304499540.
Oven Light:	1*1.2W LED, the part number is 5304499540.

* The International Electiotechnical Commission's standardized method for measuring output wattage. method is widely recognized. test method

** This is the classification of ISM (Industrial, Scientific and Medical) equipment described in the International Standard CISPR11.

*** Internal capacity is calculated by measuring maximum width, depth and height. Actual capacity for holding food is less. In compliance with standards set by:

FCC - Federal Communications Commission Authorized.

DHHS - Complies with Department of Health and Human Services (DHHS) rule, CFR, Title 21, Chapter I, Subchapter J.

- This symbol on the nameplate means the product is listed by Underwriters Laboratories, Inc.

c - This symbol on the nameplate means the product is listed by Underwriters Laboratories, Inc. for use in USA or Canada.

24 WARRANTY

Your appliance is covered by a one year limited warranty. For one year from your original date of purchase, Electrolux will pay all costs for repairing or replacing any parts of this appliance that prove to be defective in materials or workmanship when such appliance is installed, used and maintained in accordance with the provided instructions.

Exclusions

This warranty does not cover the following:

1. Products with original serial numbers that have been removed, altered or cannot be readily determined.
2. Product that has been transferred from its original owner to another party or removed outside the USA or Canada.
3. Rust on the interior or exterior of the unit.
4. Products purchased “as-is” are not covered by this warranty.
5. Food loss due to any refrigerator or freezer failures.
6. Products used in a commercial setting.
7. Service calls which do not involve malfunction or defects in materials or workmanship, or for appliances not in ordinary household use or used other than in accordance with the provided instructions.
8. Service calls to correct the installation of your appliance or to instruct you how to use your appliance.
9. Expenses for making the appliance accessible for servicing, such as removal of trim, cupboards, shelves, etc., which are not a part of the appliance when it is shipped from the factory.
10. Service calls to repair or replace appliance light bulbs, air fi lters, water fi lters, other consumables, or knobs, handles, or other cosmetic parts.
11. Surcharges including, but not limited to, any after hour, weekend, or holiday service calls, tolls, ferry trip charges, or mileage expense for service calls to remote areas, including the state of Alaska.
12. Damages to the fi nish of appliance or home incurred during installation, including but not limited to fl oors, cabinets, walls, etc.
13. Damages caused by: services performed by unauthorized service companies; use of parts other than genuine Electrolux parts or parts obtained from persons other than authorized service companies; or external causes such as abuse, misuse, inadequate power supply, accidents, fi res, or acts of God.

DISCLAIMER OF IMPLIED WARRANTIES; LIMITATION OF REMEDIES

CUSTOMER’S SOLE AND EXCLUSIVE REMEDY UNDER THIS LIMITED WARRANTY SHALL BE PRODUCT REPAIR OR REPLACEMENT AS PROVIDED HEREIN. CLAIMS BASED ON IMPLIED WARRANTIES, INCLUDING WARRANTIES OF MERCHANTABILITY OR FITNESS FOR A PARTICULAR PURPOSE, ARE LIMITED TO ONE YEAR OR THE SHORTEST PERIOD ALLOWED BY LAW, BUT NOT LESS THAN ONE YEAR. ELECTROLUX SHALL NOT BE LIABLE FOR CONSEQUENTIAL OR INCIDENTAL DAMAGES SUCH AS PROPERTY DAMAGE AND INCIDENTAL EXPENSES RESULTING FROM ANY BREACH OF THIS WRITTEN LIMITED WARRANTY OR ANY IMPLIED WARRANTY. SOME STATES AND PROVINCES DO NOT ALLOW THE EXCLUSION OR LIMITATION OF INCIDENTAL OR CONSEQUENTIAL DAMAGES, OR LIMITATIONS ON THE DURATION OF IMPLIED WARRANTIES, SO THESE LIMITATIONS OR EXCLUSIONS MAY NOT APPLY TO YOU. THIS WRITTEN WARRANTY GIVES YOU SPECIFIC LEGAL RIGHTS. YOU MAY ALSO HAVE OTHER RIGHTS THAT VARY FROM STATE TO STATE.

If You Need Service

Keep your receipt, delivery slip, or some other appropriate payment record to establish the warranty period should service be required. If service is performed, it is in your best interest to obtain and keep all receipts. Service under this warranty must be obtained by contacting Electrolux at the addresses or phone numbers below.

This warranty only applies in the USA and Canada. In the USA, your appliance is warranted by Electrolux Major Appliances North America, a division of Electrolux Home Products, Inc. In Canada, your appliance is warranted by Electrolux Canada Corp. Electrolux authorizes no person to change or add to any obligations under this warranty. Obligations for service and parts under this warranty must be performed by Electrolux or an authorized service company. Product features or specifi cations as described or illustrated are subject to change without notice.

USA
1-800-374-4432
Electrolux Home Products, Inc., 10200 David Taylor Drive Charlotte, NC 28262

Electrolux

Canada
1.800.265.8352
Electrolux Canada Corp.
5855 Terry Fox Way
Mississauga, Ontario, Canada
L5V 3E4

Printed in China

FRIGIDAIRE®

welcome *home*

Our home is your home. Visit us if you need help with any of these things:

- owner support
- accessories
- service
- registration

(See your registration card for more information.)

Frigidaire.com
1-800-374-4432

Frigidaire.ca
1-800-265-8352