User's Guide

for Topload Washers

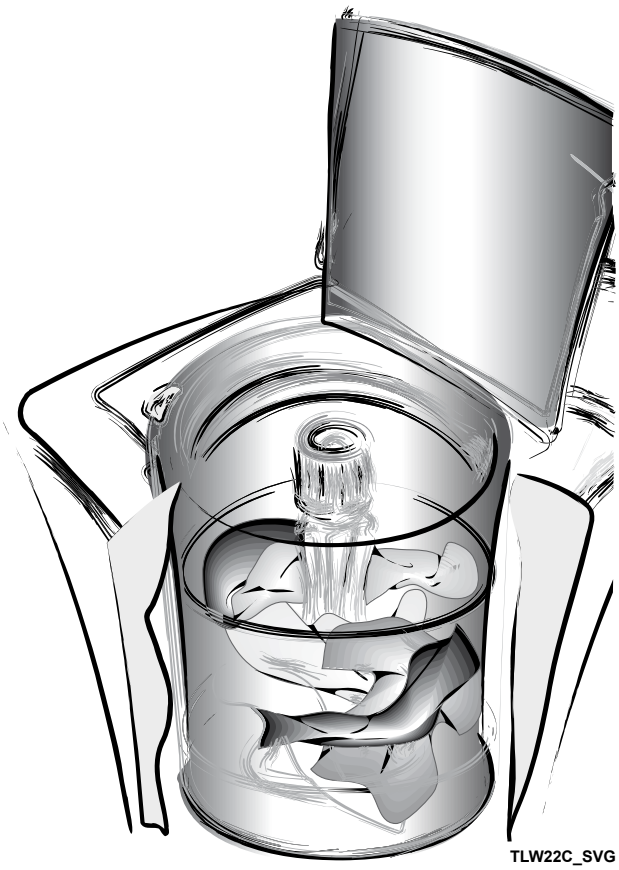

Original Instructions

Keep These Instructions for Future Reference.

CAUTION: Read the instructions before using the machine.

(If this machine changes ownership, this manual must accompany machine.)

Alliance™ Laundry Systems

www.alliancelaundry.com

Part No. 204401ENR1

March 2025

WARNING

Failure to install, maintain, and/or operate this machine according to the manufacturer's instructions may result in conditions which can produce bodily injury and/or property damage.

W030

WARNING

For your safety and to reduce the risk of fire or an explosion, do not store or use gasoline or other flammable vapors and liquids in the vicinity of this or any other appliance.

W022

NOTE: The WARNING and IMPORTANT instructions appearing in this manual are not meant to cover all possible conditions and situations that may occur. It must be understood that common sense, caution, and carefulness are factors which cannot be built into these washers. These factors MUST BE supplied by the person(s) installing, maintaining, or operating the washer.

Always contact the distributor, service agent, or the manufacturer about any problems or conditions you do not understand.

Read all instructions before using washer.

© Copyright, Alliance Laundry Systems LLC -
DO NOT COPY or TRANSMIT

Safety Information

Explanation of Safety Instruction Messages

Precautionary statements ("DANGER," "WARNING," and "CAUTION"), followed by specific instructions, are found in this manual and on machine decals. These precautions are intended for the personal safety of the operator, user, servicer, and those maintaining the machine.

DANGER

Indicates an imminently hazardous situation that, if not avoided, will cause severe personal injury or death.

WARNING

Indicates a hazardous situation that, if not avoided, could cause severe personal injury or death.

CAUTION

Indicates a hazardous situation that, if not avoided, may cause minor or moderate personal injury or property damage.

Additional precautionary statements ("IMPORTANT" and "NOTE") are followed by specific instructions.

IMPORTANT: The word "IMPORTANT" is used to inform the reader of specific procedures where minor machine damage will occur if the procedure is not followed.

NOTE: The word "NOTE" is used to communicate installation, operation, maintenance or servicing information that is important but not hazard related.

Important Safety Instructions

Save These Instructions

WARNING

To reduce the risk of fire, electric shock, serious injury or death to persons when using your washer, follow these basic precautions:

W023

- Read all instructions before using the washer.
- Install the washer according to the INSTALLATION INSTRUCTIONS. Refer to the EARTH/GROUND INSTRUCTIONS in the INSTALLATION manual for the proper earth/ground connection of the washer. All connections for water, drain, electrical power and earth/ground must comply with local codes and be made by licensed personnel when required. Do not do it yourself.
- Do not install or store the washer where it will be exposed to water and/or weather.
- Do not wash articles that have been previously cleaned in, washed in, soaked in, or spotted with gasoline, dry-cleaning solvents, or other flammable or explosive substances as they give off vapors that could ignite or explode.
- Do not add the following substances or textiles containing traces of the following substances to the wash water: gasoline, kerosene, waxes, cooking oils, vegetable oils, machine oils, dry-cleaning solvents, flammable chemicals, thinners or other flammable or explosive substances. These substances give off vapors that could ignite, explode or cause the fabric to catch on fire by itself.
- Under certain conditions, hydrogen gas may be produced in a hot water system that has not been used for two weeks or more. HYDROGEN GAS IS EXPLOSIVE. If the hot water system has not been used for such a period, before using a washing machine or combination washer-dryer, turn on all hot water faucets and let the water flow from each for several minutes. This will release any accumulated hydrogen gas. THE GAS IS FLAMMABLE, DO NOT SMOKE OR USE AN OPEN FLAME DURING THIS TIME.
- To reduce the risk of an electric shock or fire, DO NOT use an extension cord or an adapter to connect the washer to the electrical power source.
- Do not allow children to play on or in the washer. Close supervision of children is necessary when the washer is used near children. This appliance is not intended for use by persons (including children) with reduced physical, sensory or mental capabilities, or lack of experience and knowledge, unless they have been given supervision or instruction concerning the use of the ap-

© Copyright, Alliance Laundry Systems LLC - DO NOT COPY or TRANSMIT

pliance by a person responsible for their safety. This is a safety rule for all appliances.

- Cleaning and user maintenance shall not be made by children without supervision.
- Children less than three years should be kept away unless continuously supervised.
- Never operate the washer with any guards, panels and/or parts removed or broken. DO NOT tamper with the controls or bypass any safety devices.
- Use your washer only for its intended purpose, washing clothes. Always follow the fabric care instructions supplied by the garment manufacturer.
- Always read and follow manufacturer's instructions on packages of laundry and cleaning aids. To reduce the risk of poisoning or chemical burns, keep them out of the reach of children at all times (preferably in a locked cabinet). Heed all warnings or precautions.
- Do not use fabric softeners or products to eliminate static unless recommended by the manufacturer of the fabric softener or product.
- Lid MUST BE CLOSED any time the washer is to agitate or spin. DO NOT bypass the lid switch to permit the washer to agitate or spin with the lid open. A brake will stop the washtub within seconds if the lid is opened during spinning. If the washtub does not stop when the lid is opened, remove the washer from use and call the service person.
- Be sure water connections have a shut-off valve and that fill hose connections are tight. CLOSE the shut-off valves at the end of each wash day.
- Keep your washer in good condition. Bumping or dropping the washer can damage safety features. If this occurs, have your washer checked by a qualified service person.
- Do not repair or replace any part of the washer, or attempt any servicing unless specifically recommended in the user-maintenance instructions or in published user-repair instructions that you understand and have the skills to carry out. ALWAYS disconnect the washer from electrical supply before attempting any service.
- Disconnect the power cord by grasping the plug, not the cord. If the supply cord is damaged, it must be replaced by the manufacturer, its service agent or similarly qualified persons in order to avoid a hazard.
- Before the washer is removed from service or discarded, remove the lid or door to the washing compartment.
- Failure to install, maintain, and/or operate this washer according to the manufacturer's instructions may result in conditions which can produce bodily injury and/or property damage.

NOTE: The WARNING and IMPORTANT SAFETY INSTRUCTIONS appearing in this manual are not meant to cover all possible conditions and situations that may occur. Observe and be aware of other labels and precautions that are located on the machine. They are intended to provide instruction for safe use of the machine. Common sense, caution and care must be exercised when installing, maintaining, or operating the washer.

Always contact your dealer, distributor, service agent or the manufacturer about any problems or conditions you do not understand.

© Copyright, Alliance Laundry Systems LLC -
DO NOT COPY or TRANSMIT

Table of Contents

Operation 7
- Before Washing 7
- Loading the Washer 7

Operating Your Washer 9
- Determine Proper Cycle 9
  - Heavy Duty/Permanent Press Cycle 9
  - Normal Eco Cycle 9
  - Handwash/Delicate Cycle 9
  - Soak/Prewash Cycle 9
  - Extra Rinse 9
- To Wash Clothes 9
- Timer 10
- Manual Soaking 10
- Optional Features 10

Clothing Care 12
- Clothing Concerns 12

Maintenance 14
- Cold Weather Care 14
- Care of Your Washer 14
- Replacing Hoses 14
- Filter Screens 14
- Vacations and Extended Non-Use 14
- Preventative Maintenance 14
- Reinstallation of Shipping Materials 14
- Motor Overload Protector 15

Troubleshooting 16
- Contact Information 19

© Copyright 2025, Alliance Laundry Systems LLC
All rights reserved. No part of the contents of this book may be reproduced or transmitted in any form or by any means without the expressed written consent of the publisher.

Operation

Before Washing

Prepare Wash Load

Empty Pockets and Cuffs

Make sure all pockets are empty and turn them inside out. One bobby pin, metal or plastic toy, nail or sharp object in a load can catch laundry, cause tears and plug the pump. Facial tissue left in a pocket will produce extreme "lint". A crayon or lipstick in a wash load may cause stains that cannot be removed. Roll down cuffs and shake out grass, sand and gravel.

Strings on clothing such as hooded sweatshirts may get caught in or around the agitator. Remove the strings if possible or tie them together.

Mend Rips and Tears

Little holes can become bigger in the washer. Mend holes and tears before placing garments in the washer.

Close Zipper and Fasten Hooks

These can catch on garments in a wash load and tear them. Tie belts and sashes so they won't wind around clothes.

Check For Colorfastness

Squeeze a portion of garment in warm or hot sudsy water. If the color bleeds or runs, wash the item separately in cold water.

Sort Items

Different items use different wash cycles and temperatures. Always follow the manufacturer's care label.

Proper sorting is easy if you follow a few guidelines:

1. Sort by Color: Separate items into loads of whites, darks, lights and non-colorfast.
2. Sort by Fabric and Construction: Separate items into loads of cottons/linens, permanent press, synthetics/blends/poly knits, and delicates.
3. Sort by Temperature: Separate items into loads that can be washed in cold, warm or hot water.
4. Sort by Type and Amount of Soil: Heavily soiled clothes will need extra treatment. Lightly soiled clothes can become dingy if washed with heavily soiled items.
5. Sort Lint "Shedders" From Lint "Receivers": Some fabrics attract lint and should not be washed with lint-shedding loads. Lint shedders are cottons, terry towels, chenille bedspreads, rugs and clothes that have been heavily bleached. Lint receivers are synthetics, permanent or durable press, knits (including socks), corduroy, and other smooth fabrics.

Pretreat

Pretreat shirt collars and cuffs with a pretreat product or liquid detergent when placing them in the washer. Before washing, treat special stains individually.

WARNING

Do not wash or dry items soiled with vegetable or cooking oils. Some oils may remain after washing and may cause the fabric to catch on fire by itself.

W527

Loading the Washer

Load Articles

NOTE: Always add detergent first.

© Copyright, Alliance Laundry Systems LLC -
DO NOT COPY or TRANSMIT

- Load items by the amount of space they take up, not by their weight. Mix large and small items in a load to get the best washing results.
- Drop items loosely into the washtub. The bulk of the clothes rather than the weight will determine load size. Do not pack items in or wrap them around the agitator. Overloading can cause poor cleaning, excessive wrinkling and tears.

- Items should move freely through the wash water for best cleaning results. Items should rollover, sink and then reappear.
- When washing very large items, do not fill washtub as full as with other loads.

Wash Temperature

Hot

Hot water is the most effective for cleaning, but it is not recommended for all fabric types (read labels).

Warm

The Warm Wash is useful for providing a thorough cleaning on light and moderately soiled clothing without damaging fabric or adding to color fading. Warm water also reduces wrinkling. Use with non-colorfast or dark colors, permanent press, silks, woolens, nylon, and acrylic.

Cold

The Cold Wash is ideal for delicate items. Although its cleaning abilities are not as great as with hot or warm water, it is useful for colors that bleed easily and for sensitive fabrics.

All rinses use cold water. It is the most beneficial for fabrics. Cold rinses reduce wrinkling and color fading. In addition, cold rinses will save money and energy.

NOTE: In wash temperatures colder than 16°C [60°F] , detergents do not dissolve well. This may cause ineffective cleaning, or lint and residue to form.

NOTE: Always follow manufacturer's care labels.

Wash Temperature Guide

Water Temperature	Use	Comments
HOT	• Sturdy whites and colorfast items • Work clothes • Soiled items • Diapers	• Best cleaning for items soiled with oily or greasy stains, grass, or ink.
WARM	• Light and moderately soiled items • Non-colorfast or dark colors • Permanent press • Silks, woolens, nylon, acrylic	• Reduces wrinkling in permanent press fabrics • Less fading • Reduces shrinking in knits
COLD	• Non-colorfast fabrics • Extra delicate clothing	• Saves energy • Reduces color fading • Reduces wrinkling • Reduces shrinking

Table 1

Energy

You can save energy when washing by following these guidelines:

1. Heating water accounts for the greatest energy expense when washing. Save on heating water by using warm or cold washes.
2. Wash full loads, but do not overload.
3. Use Soak/Prewash cycle for heavily soiled items to reduce wash times.
4. Select a shorter wash time for lightly soiled items.

© Copyright, Alliance Laundry Systems LLC -
DO NOT COPY or TRANSMIT

Operating Your Washer

WARNING

To reduce the risk of fire, electric shock, serious injury or death to persons, read the Safety Information section before operating your washer.

W522

Determine Proper Cycle

Heavy Duty/Permanent Press Cycle

Use for sturdy items, like play or work clothes, towels, T-shirts, etc., or for permanent press items and synthetics. The wash time selection will depend on the type of fabric and the amount of soil. For the best results when cleaning heavily soiled items, use a higher soil level selection. Lightly soiled items require less wash time.

There are three settings in the HEAVY DUTY/PERMANENT PRESS cycle - HEAVY, NORMAL and LIGHT.

Normal Eco Cycle

To maximize energy and water efficiency, this cycle uses less water than the other cycles. It also uses less hot water.

The rinse part of the cycle is a spray rinse. The washer will start spinning and the cold water valve will turn on during the spin to provide a spray rinse.

This cycle is recommended for washing everyday cottons and linens with the Extra Rinse option Off.

There are two settings in the NORMAL ECO cycle - NORMAL and LIGHT.

Handwash/Delicate Cycle

Wash delicate items usually washed by hand on this cycle. A full tub of water is recommended (even for small loads) to allow the delicate items to move freely through the water. More water helps reduce fabric wear, wrinkling, and provides for a clean wash.

On this cycle, the agitation during the wash portion of the cycle is not constant. The wash will alternate between periods of agitation and then a short soak until advancing to the spin portion of the cycle. All spin speeds are a low spin.

There are two settings in the HANDWASH/DELICATE cycle - NORMAL and LIGHT.

Soak/Prewash Cycle

Use for heavily soiled or stained clothing. During the SOAK/PREWASH setting, the washtub will fill with water, agitate for a reduced period of time, pause for approximately 12 minutes, and spin out to complete the cycle.

Extra Rinse

This optional setting is useful for detergent sensitive skin. By pressing the EXTRA RINSE button to ON, the HEAVY DUTY/PERMANENT PRESS and HANDWASH/DELICATE cycles will each provide an additional rinse.

To Wash Clothes

IMPORTANT: Before using your new washer, make sure the washer cord is connected to an appropriate electrical outlet that is properly installed and connected to a protective earth/ground. Make sure the washer hoses are connected to the hot and cold water faucets, and that the faucets are turned on. Be sure the drain hose is not kinked and is inserted into a drain. Refer to the INSTALLATION INSTRUCTIONS for details of proper washer installation.

IMPORTANT: Prior to first wash, use an all purpose cleaner, or a detergent and water solution, and a damp cloth to remove shipping dust from inside of wash drum.

1. Get the clothes ready for washing. Empty pockets and cuffs. Sort items into separate loads. Pretreat stains and heavily soiled areas.

IMPORTANT: Remove all sharp objects from laundry to avoid tears and rips to items during normal machine operation.

2. Measure and add low sudsing, High Efficiency (HE) detergent to the washtub. Follow instructions on detergent package for amount to use.

NOTE: High efficiency (HE) detergent is recommended for use in this machine. Look for the HE logo or "high efficiency" on the detergent's label.

3. Add clothes loosely into the washtub (16 lbs. [7.2 kg] maximum dry clothes load).

© Copyright, Alliance Laundry Systems LLC -
DO NOT COPY or TRANSMIT

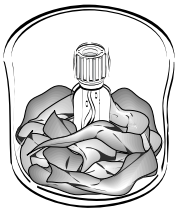

4. Close the lid. The washer will not fill, agitate or spin with the lid open.

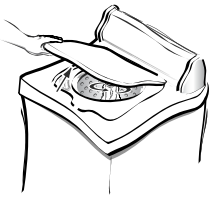

5. Set WASH TEMPERATURE control. (All rinses are cold.)
6. Select EXTRA RINSE if desired.
7. Select the cycle according to the type of fabric being washed. Push the timer knob in and turn clockwise to the desired cycle and wash setting.
8. Pull the timer knob out to start the water fill. Agitation will begin when the water reaches the level selected.

NOTE: Lid must be closed for fill, agitation and spin to start.

The washer will stop (pause) shortly before the wash and rinse spins. Do not turn the timer through these pauses. They are part of the cycle.

Timer

Although the washer cycles are automatic, the timer may be reset to lengthen, shorten or repeat a portion of a cycle.

To set or reset the timer, push timer knob in to stop the washer. Hold timer knob in firmly while turning it clockwise to the setting desired. Pull timer knob out to start the washer.

Manual Soaking

1. Set the timer knob in the center of the word "RINSE" (this prevents the washer from spinning without first filling with water).
2. Place the soaking product and clothes load in the washtub.
3. Pull timer knob to start washer fill.
4. After fill is completed and agitation has started (lid must be closed), push the timer knob in. This will stop the washer
5. When the clothes have soaked the desired length of time, TURN THE TIMER KNOB TO THE START OF THE SPIN SETTING, then pull the timer knob out to start the spin.

CAUTION

Failure to turn the timer knob to the spin cycle and completely drain the washtub after soaking will result in the washer overflowing and cause property damage.

W524

Optional Features

Bleach Dispenser

The bleach dispenser is located in the left front corner, under the lid.

Use liquid bleach in the dispenser. Powdered bleach must not be used in the dispenser. Add powdered bleach to the wash water.

Use no more than one cup chlorine bleach for large loads, three-quarters cup for medium and one-half cup for small loads.

Carefully pour recommended amount of bleach into the dispenser during the first fill of the washer.

Be careful not to spill undiluted bleach. It is a strong chemical and can damage some fabrics if it is not properly diluted.

Fabric Softener Dispenser

Fabric softener should not be used when the Normal Eco cycle is selected unless the Extra Rinse is set to ON.

To Use Fabric Softener Dispenser

After the clothes are loaded into the washtub and before the start of the WASH cycle, pour the proper amount of liquid fabric softener into the bottle measuring cap (refer to bottle directions). Pour into dispenser.

The large fabric softener dispenser allows for the fabric softener to be diluted with water. We recommend adding water up to the fill level. Do not exceed tip of arrow which indicates correct fill level. Over-filling can allow fabric softener to spill onto the clothes, causing stains on clothes if the softener comes into contact with detergent suds.

© Copyright, Alliance Laundry Systems LLC -
DO NOT COPY or TRANSMIT

The fabric softener will remain in the dispenser during the wash fill, agitation and spin. At the end of the wash spin, the liquid fabric softener will be dispensed into the washtub through the slots in the agitator and will be mixed with the incoming rinse water.

To Clean the Dispenser

1. Remove the dispenser housing from agitator by squeezing the lower part of the dispenser, pulling directly upward and at the same time tilting slightly. This will expose the dispenser cup, which is also removable for cleaning. Refer to illustration.
2. Soak both housing and cup in hot soapy water.
3. Rinse housing and cup clean.
4. Clean funnel shape in top of agitator by using a small brush.
5. After cleaning, install dispenser cup, then push dispenser housing directly downward onto top of agitator until firmly snapped together.

IMPORTANT: When adding detergent to the wash load, DO NOT allow any detergent to enter the softener dispenser cup. If this happens, refer to the cleaning instructions.

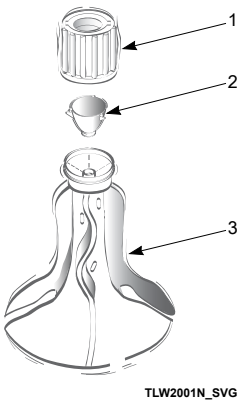

1. Dispenser Housing
2. Dispenser Cup
3. Agitator

Use Tips

- Fabric softener spilled onto garments may cause staining. To remove, dampen stain and rub with bar soap. Wash as usual.
- Liquid fabric softeners will be dispensed during the first rinse and should not be combined with bleach, bluing, starch, detergents, soaps or packaged water conditioners.
- Fabric softener is not to be used in dispenser when using Prewash cycle, if available.
- When adding detergent to wash water, do not allow any to enter into softener dispenser cup, as softener will become gummy.

To prevent softener buildup, the dispenser can be filled with clean water for automatic cleaning. This can be done in washing cycles other than when softener is used.

© Copyright, Alliance Laundry Systems LLC -
DO NOT COPY or TRANSMIT

Clothing Care

Clothing Concerns

To keep clothes looking white or bright, use good washing practices at all times to prevent a gradual build-up of soil or water hardness minerals on them. If you notice that your clothes are not as bright as they should be, take corrective measures immediately.

Problem	Cause	Solution
Gray or Dingy Clothes	Insufficient Detergent	Add more detergent to washtub before loading clothes. Mild detergents are not suitable for average soil.
	Improper Sorting	Wash whites separately. Separate light from heavily soiled items. Clothes can pick up soil from dirty wash water.
	Nonphosphate Detergent and Hard Water	Follow package directions. Soften water if possible.
	Water Not Hot Enough	White clothes will stay whiter with hot wash water. Increase temperature.
	Overcrowding Washer	Clothes must circulate freely through the water for best results.
Yellowed Clothes	Unremoved Soil	Skin soil is hard to remove. Check hem edge of sheets and pillowcases, bottom end of t-shirts, etc. If this portion is white and center is yellow, the fabric contains unremoved soil. Use sufficient detergent and a hot wash. Chlorine bleach may be needed.
	Clothes Stained from Iron in the Water	To test for an iron stain, use a rust remover that is recommended for use with washing machines on a portion of the garment. Follow bottle directions for larger items.
	Older Clothes	Some white fabrics turn yellow with age and cannot be whitened.
Clothes Tearing or Damaged	Improper Use of Chlorine Bleach	No correction for bleach damaged clothes. Always measure and dilute bleach. Take extra care to avoid unwanted spilling.
	Insufficient Precare	Fasten all hooks and zippers. Mend tears. Remove objects from pockets.
	Overcrowding or Overloading	Make sure all items can move freely during agitation.

continues...

© Copyright, Alliance Laundry Systems LLC -
DO NOT COPY or TRANSMIT

Problem	Cause	Solution
Excessive Lint	Improper Sorting	Fabrics that shed lint cannot be washed with fabrics that receive lint.
	Insufficient Detergent/Non-phosphate Detergent	Use enough detergent so lint remains suspended in water and flushed out. Do not oversuds the water.
	Mixing Fabric Types	Knits and permanent press attract lint. Wash these only with similar items. Use fabric softener in rinse water.
Wrinkling	Improper Sorting	Heavy items like towels should not be washed with light items like nightgowns.
	Improper Cycle	Make sure cycle selected is appropriate for type of clothes.
	Improper Temperature	Using a warm or cold wash and a cold rinse reduces wrinkling.
	Too Many Clothes in Washer	Clothes must circulate freely through the water for best results.

© Copyright, Alliance Laundry Systems LLC -
DO NOT COPY or TRANSMIT

Maintenance

Cold Weather Care

If the unit is delivered on a cold day (below freezing), or is stored in an unheated room or area during the cold months, do not attempt to operate the washer until it has had a chance to warm up. Water from the previous cycle may remain.

Care of Your Washer

Use only a damp or sudsy cloth for cleaning the control panel. Some cleaning products may harm the finish on the control panel or damage the interior. DO NOT use products that contain alcohol on the control panel. Wipe the panel dry after cleaning.

Wipe the washer cabinet as needed. If detergent, bleach or other washing products are spilled on the cabinet, wipe immediately. Some products will cause permanent damage if spilled on the cabinet.

Do not use scouring pads or abrasive cleansers on control panel or cabinet.

Leave the lid open to allow the inside of the washer to dry out after use. This helps prevent musty odors from developing.

The agitator should not be removed except for service. The washtub is designed to be self cleaning, though it may need rinsing or wiping after some unusual loads have been washed. This may also be necessary if too little detergent is used.

Replacing Hoses

Hoses and other rubber parts deteriorate after extended use. Hoses may develop cracks, blisters or material wear from the temperature and constant high pressure they are subjected to.

All hoses should be checked on a monthly basis for any visible signs of deterioration. Any hose showing the signs of deterioration listed above should be replaced immediately. All hoses should be replaced every five years.

Flood safe hoses often can be the cause for no fill or slow fill issues. They are not recommended. Only use replacement fill hoses from the manufacturer.

Filter Screens

Check the filter screens in the fill hoses for debris or damage every six months. Clean or replace them if necessary.

If the washer is filling with water slower than normal, check the filter screens. Clean or replace them if necessary.

Order filter screen Part No. 803615 from the nearest authorized parts distributor.

Vacations and Extended Non-Use

IMPORTANT: To avoid possible property damage due to flooding, turn off the water supply to the washer whenever there will be an extended period of non-use.

Preventative Maintenance

Follow these guidelines to ensure the washer operates properly. Call for service if you observe any of the following: water of any amount on the floor, an increase in operating noise or water remaining in the wash basket after a cycle.

Frequency	Maintenance Procedure
Monthly	1. Check all hoses and the drain for leaks. 2. Check the lid switch for proper operation. 3. Check to make sure the washer is level. 4. Clean upper 2-3 inches of wash tub. Fill washer with warm water at highest setting. Use an all-purpose cleaner or a steel wool soap pad.
Every six months	1. Clean the filter screens in the fill hoses.
Every five years	1. Have a qualified service technician conduct general preventative maintenance on the washer to ensure it operates properly. 2. Replace the fill hoses.

Table 2

Reinstallation of Shipping Materials

You must install the shipping brace and shipping plug any time the washer is moved.

Shipping Brace

The shipping brace in the lid opening should be saved and reinstalled whenever the washer is moved. To reinstall the brace, open the washer lid and place the brace over the washer agitator, placing the back of the brace into the lid opening first.

Shipping Plug

The plastic shipping plug should be saved and reinstalled any time the washer is moved. The plug fits into two openings: The base opening and the shipping plug opening on the bottom of the movable pivot dome. The plug MUST be inserted into both openings to prevent damage to the washer. In order to accomplish

© Copyright, Alliance Laundry Systems LLC -
DO NOT COPY or TRANSMIT

this, the shipping plug opening must be directly lined up with the base opening.

Refer to illustration below.

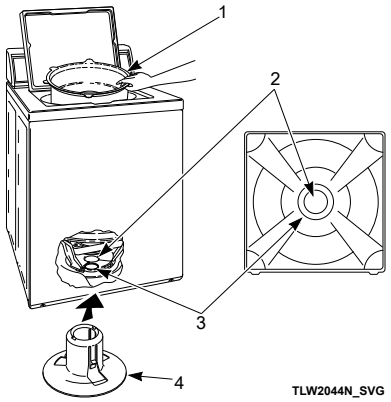

1. Shipping Brace
2. Shipping Plug Opening
3. Base Opening
4. Shipping Plug

After the shipping brace has been installed in the lid opening, tilt washer back enough to access base opening.

Insert shipping plug into base opening and, using the palm of your hand, push shipping plug into washer until it snaps into shipping plug opening.

Motor Overload Protector

The internal motor overload protector will stop the motor automatically if there are too many clothes in the washtub or if a failure has occurred within the machine. The overload protector will reset itself in two or three minutes and the motor will restart automatically.

If the overload protector stops the motor again, remove the washer from use and call a service person to correct the problem.

© Copyright, Alliance Laundry Systems LLC -
DO NOT COPY or TRANSMIT

Troubleshooting

Try these troubleshooting tips before making a service call. They may save you time and money.

Washer Symptom	Possible Cause/Solution
Won't Fill	• Make sure power cord is plugged all the way into the electrical outlet. • Make sure hot and cold water faucets are turned on. • Make sure lid is closed. • Make sure that the fill hoses are not kinked or twisted. • Pull timer knob out to start washer. • Make sure that the controls are properly set. • In the Normal Eco cycle, during the rinse portion of the cycle, the tub won't fill with water. Instead, there is a spray rinse. • Make sure that the last spin has been completed. • Check the laundry room fuse or circuit breaker. • Clean the screens in the water mixing valve and the filter screens located at the faucet end of the fill hoses. (Owner is responsible for service calls regarding cleaning of the screens.) • Water is being siphoned from the washer during the cycle. Refer to the Installation instructions to make sure that the drain hose has been properly installed.
Won't Start	• Make sure lid is closed. • Pull timer knob out to start washer. • Make sure power cord is plugged all the way into the electrical outlet. • Make sure that the controls are properly set. • Check the laundry room fuse or circuit breaker. • The motor overload protector may have stopped the cycle. It will reset itself in two or three minutes and restart the washer automatically.
Won't Agitate	• Make sure lid is closed. • Pull timer knob out to start washer. • Make sure power cord is plugged all the way into the electrical outlet. • Check the laundry room fuse or circuit breaker. • The motor overload protector may have stopped the cycle. It will reset itself in two or three minutes and restart the washer automatically. • Broken drive belt. Call the service person.

continues...

© Copyright, Alliance Laundry Systems LLC -
DO NOT COPY or TRANSMIT

Washer Symptom	Possible Cause/Solution
Won't Spin	• Make sure lid is closed. • Pull timer knob out to start washer. • Make sure power cord is plugged all the way into the electrical outlet. • Check the laundry room fuse or circuit breaker. • The motor overload protector may have stopped the cycle. It will reset itself in two or three minutes and restart the washer automatically. • Broken drive belt. Call the service person.
Stops/Pauses During Cycle	• Pauses are part of the washer's normal operation. The washer will stop (pause) shortly before the wash and rinse spins. • Check the laundry room fuse or circuit breaker. • The motor overload protector may have stopped the cycle. It will reset itself in two or three minutes and restart the washer automatically.
Won't Drain	• Make sure drain hose is not kinked or twisted. • Make sure drain hose is not clogged. • Make sure drain receptacle is not clogged. • Refer to the Installation instructions to make sure that the drain hose has been properly installed.
Water Leaks	• Check that fill hoses are properly installed on the faucets and the washer's water mixing valve. • Check the condition of the fill hoses. Replace fill hoses every five years. • Make sure drain receptacle is not clogged. • Check laundry room plumbing. • Check house water pressure. In cases of extremely low water pressure, leaking may occur. • Laundry load may be oversudsing or overloaded. Use less detergent (or low-sudsing detergent) and proper load sizes.
Is Noisy	• Wash load may be unbalanced. Open lid and redistribute the load. • Make sure washer is level. Uneven leveling can cause vibration. • A newly installed washer may make a knocking sound if the machine has been in storage. The belt may have settled. Run washer through 4-5 cycles to loosen belt. Washer operation will not be affected.
Load Is Too Wet	• Wash load may be unbalanced. Open lid and redistribute the load. • Load is too small. Add items to make full load.
Wrong Water Temperature	• Make sure that the controls are properly set. • Check fill hoses. Make sure hot faucet hose is connected to hot mixing valve (indicated with "H" on the valve bracket) and cold faucet is connected to cold mixing valve (indicated with "C" on the valve bracket). • Make sure laundry room water heater is adjusted properly. • The Normal Eco cycle uses a colder water temperature.

continues...

© Copyright, Alliance Laundry Systems LLC -
DO NOT COPY or TRANSMIT

Washer Symptom	Possible Cause/Solution
Low Water Level	• Starting January 2009, the Department of Energy (DOE) mandated new efficiency standards which resulted in reduced water levels in the topload washer.

© Copyright, Alliance Laundry Systems LLC -
DO NOT COPY or TRANSMIT

Contact Information

If service is required, contact the nearest Factory Authorized Service Center.

If you are unable to locate an authorized service center or are unsatisfied with the service performed on your unit, contact:

Alliance Laundry Systems
Shepard Street
P.O. Box 990
Ripon, Wisconsin 54971-0990
www.alliancelaundry.com
Phone: +1 (920)748-3121

Date Purchased	
Model Number	
Serial Number	

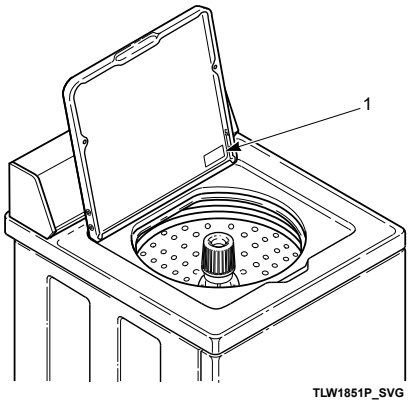

1. Serial Plate

When contacting us about your washer, PLEASE GIVE THE MODEL AND SERIAL NUMBERS. The model and serial numbers are located on the serial plate. The serial plate will be in the location shown. Please include a copy of your bill of sale and any service receipts you have.

If replacement parts are required, contact the source from where you purchased your unit or call +1 (920) 748-3950 for the name and address of the nearest authorized parts distributor.

WARNING

To reduce the risk of serious injury or death, DO NOT repair or replace any part of the unit or attempt any servicing unless specifically recommended in the user-maintenance instructions or in published user-repair instructions that you understand and have the skills to carry out.

W329

© Copyright, Alliance Laundry Systems LLC -
DO NOT COPY or TRANSMIT