EVERY THING YOU NEED TO KNOW ABOUT YOUR XO

XOE2

MODELS XOE230S, XOE230W, XOE230B

I worked really hard on this manual - so please read it...

XO

VENTILATION

When buying any XO appliance,
you can be confident you have chosen a
high quality, innovative and stylish product
from a company that cares about you!

If you require service or have questions,
there are 2 ways to contact our ventilation experts;

Online @ https://xoappliance.com/priority-service-for-your-xo-product/

Or by phone 973-403-8900

CONGRATULATIONS
on purchasing your XO.
Before you proceed, take just a
moment to register your XO at:

www.xoappliance.com/register-your-product/

REGISTRATION HELPS YOU BY -

Ensuring warranty coverage should you need service
Providing ownership verification for insurance purposes
XO can notify you in the event of product changes or recalls.

WHERE THINGS ARE

GETTING READY Safety and Precautions Overall Dimensions Install Examples Mounting Height Planning Ductwork	**4 - 11**
THE INSTALL Vented or Recirculating Installation Mounting Dimensions Installing Electrical Connections	**13 - 21**
OPERATING & MAINTENANCE Push Button Controls Maintenance	**22**
TROUBLESHOOTING Common Questions & Answers	**23**
WARRANTY	**24**

PLEASE READ AND FOLLOW ALL SAFETY INSTRUCTIONS

It's for your own good... Honest.

XO

SAFETY FIRST

- **IMPORTANT SAFETY INSTRUCTIONS**

- **FOR RESIDENTIAL USE ONLY**

- **READ AND SAVE THESE INSTRUCTIONS**
- **PLEASE READ ENTIRE INSTRUCTIONS BEFORE PROCEEDING.**
- **IMPORTANT**: Save these instructions for the Local Electrical Inspector's use.
- **INSTALLER**: Please leave these instructions with this unit for the owner.
- **OWNER**: Please retain these instructions for future reference.

- Take care when using cleaning agents or detergents.
- Suitable for use in household cooking area.

- **WARNING** - To reduce the risk of fire or electric shock, do not use this fan with any Solid-State Speed Control Device.

- **CAUTION** - To reduce risk of fire and to properly exhaust air, be sure to duct air outside – Do not vent exhaust air into spaces within walls or ceilings or into attics, crawl spaces, or garages.

- **CAUTION** - For Residential Kitchen ventilating use only. Do not use to exhaust hazardous or explosive materials and vapors.

- **CAUTION** - To avoid motor bearing damage and noisy and/or unbalanced impellers, keep drywall spray, construction dust, etc. off power unit.

- **CAUTION** - Please read specification label on product for further information and requirements.

- **WARNING** – TO REDUCE THE RISK OF FIRE, ELECTRIC SHOCK, OR INJURY TO PERSONS, OBSERVE THE FOLLOWING:

A. Use this unit only in the manner intended by the manufacturer. If you have questions, contact the manufacturer.

B. Before servicing or cleaning unit, switch power off at service panel and lock the service disconnecting means to prevent power from being switched on accidentally. When the service disconnecting means cannot be locked, securely fasten a prominent warning device, such as a tag, to the service panel.

- **WARNING - TO REDUCE THE RISK OF A RANGE TOP GREASE FIRE:**

A. Never leave surface units unattended at high settings. Boilovers cause smoking and

greasy spillovers that may ignite. Heat oils slowly on low or medium settings.

B. Always turn hood ON when cooking at high heat.

C. Clean ventilating fans frequently. Grease should not be allowed to accumulate on fan or filter.

D. Use proper pan size. Always use cookware appropriate for the size of the surface element.

E. Keep fan, filters and grease laden surface clean.

F. Use high range setting on range only when necessary. Heat oil slowly on low to medium setting.

G. Don' t leave range unattended when cooking.

H. Always use cookware and utensils appropriate for the type and amount off food being prepared.

■ **WARNING** – TO REDUCE THE RISK OF INJURY TO PERSONS IN THE EVENT OF A RANGE TOP GREASE FIRE, OBSERVE THE FOLLOWING:

A. SMOTHER FLAMES with a close-fitting lid, cookie sheet, or metal tray, then turn off the burner. BE CAREFUL TO PREVENT BURNS. If the flames do not go out immediately, EVACUATE AND CALL THE FIRE DEPARTMENT.

B. NEVER PICK UP A FLAMING PAN – You may be burned.

C. DO NOT USE WATER, including wet dishcloths or towels – a violent steam explosion will result.

D. Use an extinguisher ONLY if:

1. You know you have a Class ABC extinguisher, and you already know how to operate it.

2. The fire is small and contained in the area where it started.

3. The fire department is being called.

4. You can fight the fire with your back to an exit.

(Based on "kitchen firesafety tips" published by NFPA.)

Proper maintenance of the Range Hood will assure proper performance of the unit.

■ INSTALLATION INSTRUCTIONS

WARNING – TO REDUCE THE RISK OF FIRE, ELECTRIC SHOCK, OR INJURY TO PERSONS, OBSERVE THE FOLLOWING:

A. Installation work and electrical wiring must be done by qualified person(s) in accordance with all applicable codes and standards, including fire-rated construction.

B. Sufficient air is needed for proper combustion and exhausting of gases through the flue (chimney) of fuel burning equipment to prevent back drafting. Follow the heating equipment manufacturer's guideline and safety standards such as those published by the National Fire Protection Association (NFPA), and the American Society for Heating, Refrigeration and Air Conditioning Engineers (ASHRAE), and the local

code authorities.

C. When cutting or drilling into wall or ceiling, do not damage electrical wiring and other hidden utilities.

D. Ducted fans must always be vented to the outdoors.

E. This unit must be grounded.

■ **WARNING** - TO REDUCE THE RISK OF FIRE, USE ONLY METAL DUCTWORK.

■ **WARNING** - UNDER CERTAIN CIRCUMSTANCES DOMESTIC APPLIANCES MAY BE DANGEROUS.

A. Do not check filters with hood working.

B. No food can be cooked flambè underneath the hood.

C. The use of an unprotected flame is dangerous for the filters and could cause fires.

D. Watch constantly while frying food in order to avoid cooking oil flare ups.

E. Repairs must be made using factory original parts by qualified personnel.

F. Before performing any maintenance operation, disconnect the hood from the electrical service.

■ The manufacturers will not accept any responsibility for possible damages, because of failure to observe the above instructions.

BEFORE YOU BEGIN

You will need some simple tools.

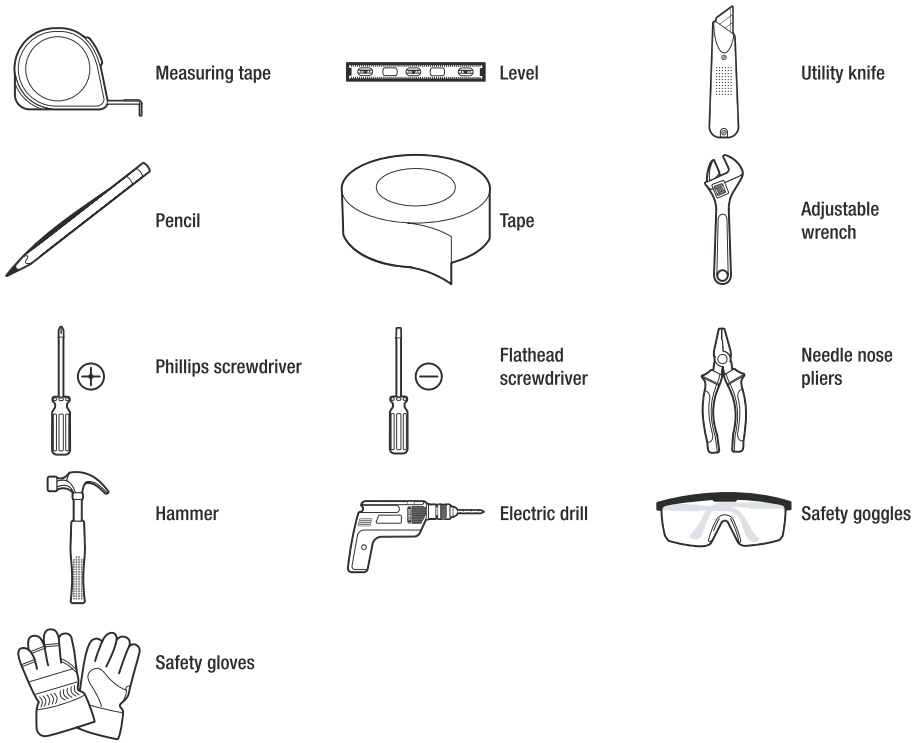

Take time to plan your work. If you are venting the hood outside - follow the guide lines in this book to minimize the length and turns of your dutwork and maximize performance.

DANGER:If installing above a gas appliance - turn gas off at the source before installing or servicing this appliance.

CAUTION: For indoor residential kitchen ventilation only.
Do not install or operate in hazardous areas.

CAUTION: Unplug or disconnect from power supply before performing installation or any form of service to this appliance.

WARNING: This unit requires a properly grounded circuit for safe operation. All electrical work must be performed by a qualified electrician in compliance with all applicable codes

DIMENSIONS

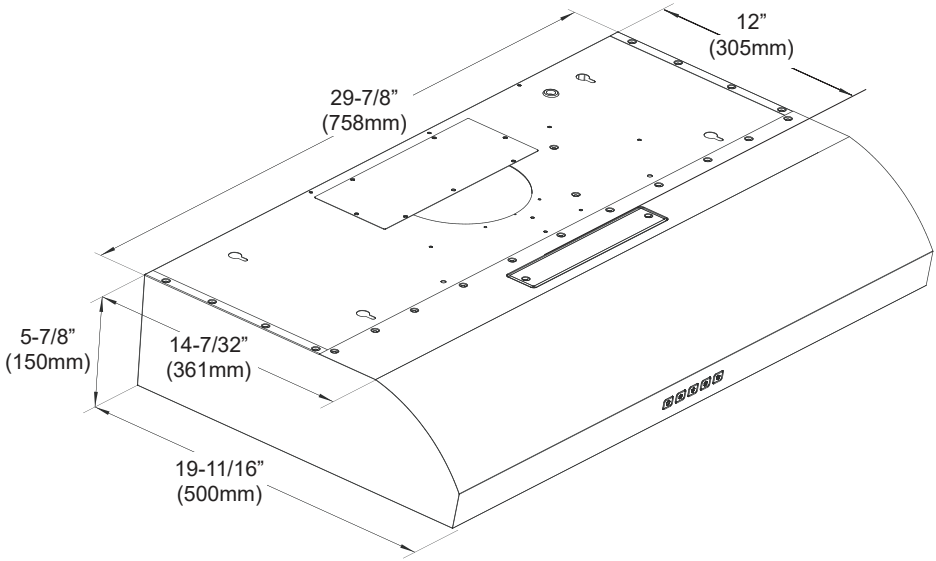
12”
(305mm)
29-7/8”
(758mm)
5-7/8”
(150mm)
14-7/32”
(361mm)
19-11/16”
(500mm)

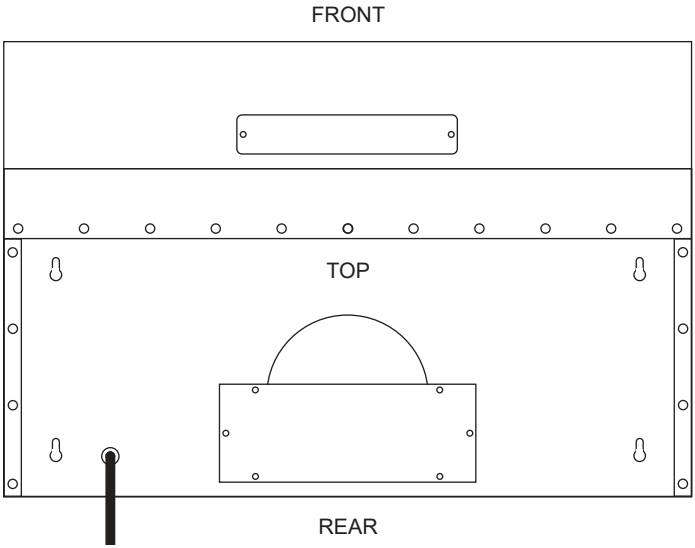
FRONT
TOP
REAR

TYPICAL INSTALLATION EXAMPLES

VENTED

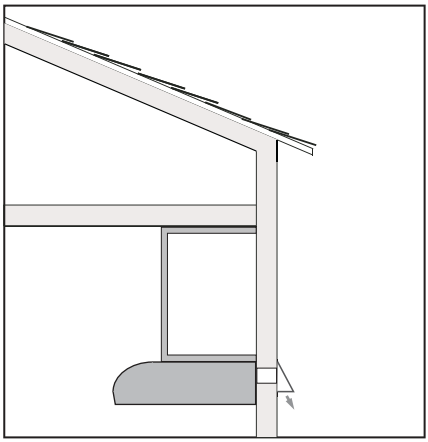

WALL EXHAUST

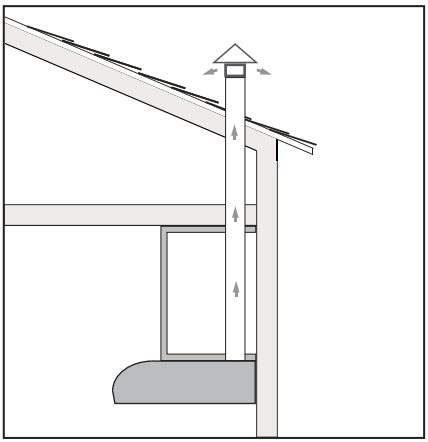

ROOF EXHAUST

RECIRCULATION

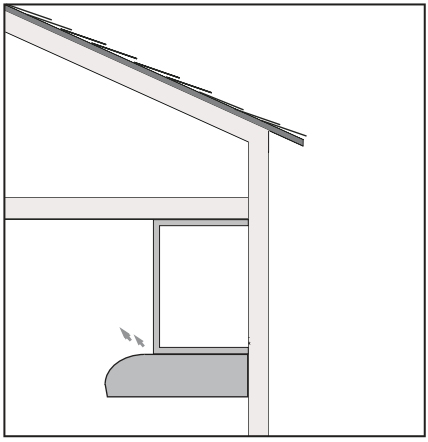

BUILT-IN FRONT EXHAUST VENT

RECIRCULATION EXHAUST MUST BE RETURNED TO THE SPACE

HIGHS AND LOWS

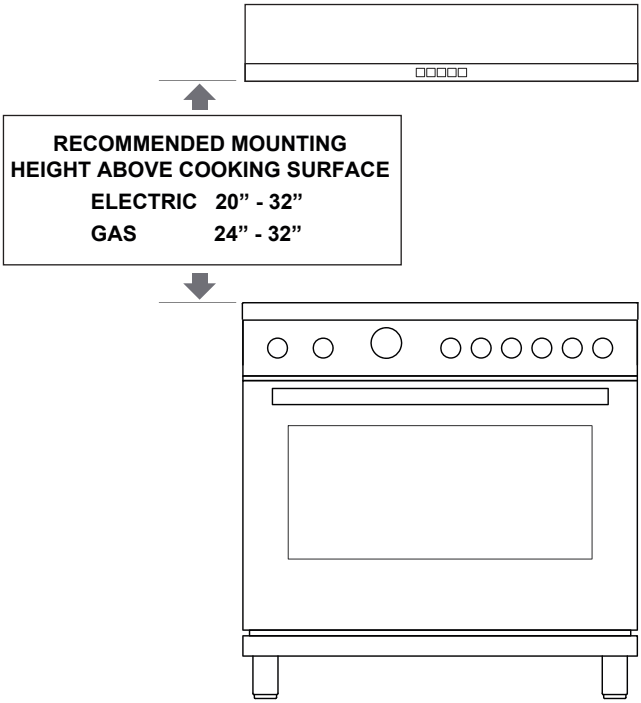

All range hoods have a recommended range of installation height over the cooking surface.

It is important to install the hood at the proper mounting height. Hoods mounted too low could result in heat damage and fire hazard; while hoods mounted too high will be hard to reach and will lose its performance and efficiency.

A FEW SIMPLE RULES TO PLAN YOUR DUCTWORK

THIS HOOD IS DESIGNED TO USE A 6” or 7” ROUND DUCT -
IT MAY BE TRANSITIONED TO A 3-1/4” X 10” RECTANGULAR DUCT

NEVER REDUCE DUCT SIZE. UNDERSIZED DUCTING SEVERELY RESTRICTS AIR FLOW AND HARMS PERFORMANCE.
(Example: the area of a 6” Duct is more than TWICE that of a 4” Duct)

KEEP DUCT RUNS AS SHORT AND STRAIGHT AS POSSIBLE.

AVOID USING FLEXIBLE METAL DUCTING IF RUN IS LONGER THAN 6’.

NEVER USE PLASTIC DUCTING.

USE SMOOTH BORE METAL DUCTING.

MINIMIZE THE NUMBER OF FITTINGS (see chart).

WHEN YOU MUST USE FITTINGS, TRY TO SEPARATE THEM WITH SECTIONS OF 3’ OR MORE OF STRAIGHT DUCT.

ALWAYS FOLLOW THE MANUFACTURER’S GUIDELINES FOR THE COOKING EQUIPMENT YOU ARE VENTING.

IF MAKE UP AIR CONTROL DAMPERS ARE REQUIRED, POSITION THE SENSOR IN A STRAIGHT RUN OF DUCT IDEALLY WITH 3’ OF STRAIGHT DUCT BETWEEN EACH SIDE OF THE SENSOR AND A DUCT FITTING. REMEMBER TO INCLUDE POWER AND CONTROL WIRING FOR THIS IN YOUR PLANS.

ADHERE TO ALL LOCAL BUILDING CODES AND ORDINANCES.

USE THE WORKSHEET THAT FOLLOWS TO HELP CALCULATE THE **TOTAL EQUIVILENT FEET** OF YOUR DUCT RUN.

TOTAL EQUIVILENT FEET SHOULD BE LESS THAN 100’.

CAUTION: Wear leather work gloves when unboxing, handling or installing this appliance or any sheet metal parts which can have sharp edges.

ESTIMATING TOTAL EQUIVALENT FEET IN A DUCT

CAUSING AIR TO CHANGE DIRECTION CAUSES TURBULENCE AND RESTRICTS FLOW IN A SYSTEM.
IF USING FLEXIBLE METAL DUCT - INCREASE ALL MULTIPLIERS BY 50% (12 BECOMES 18 - ETC.)

THIS EASY TO USE WORKSHEET IS FOR 600 CFM OR LESS.
UNDER "QTY USED" ENTER HOW OF EACH SECTION YOU WILL BE USING.
IN THE FIRST TWO ROWS - ENTER HOW MANY FEET OF EACH TYPE OF STRAIGHT DUCT YOU WILL BE USING (I.E. FOR 20 FT ENTER 20, FOR 30FT ENTER 30).
ENTER THE NUMBER OF EACH TYPE OF TURN YOU ARE USING AND THE TYPE OF END CAP.
MULTIPLY ACROSS EACH ROW THE "MULTIPLIER" x "QTY USED" TO GET THE EQUIVALENT FEET FOR THOSE COMPONENTS.
ADD UP ALL THE VALUES IN THE "EQUIVALENT FEET" COLUMN.

DUCT PIECE	DESCRIPTION	MULTIPLIER	QTY USED	EQUIVALENT FEET
	1' of 6" Round Duct	**1**		
	1' of 3 1/4" x 10" Rect. Duct	**1**		
	6" 90 Degree Elbow	**12**		
	6" 45 Degree Elbow	**7**		
	3 1/4" x 10" 90 Degree	**14**		
	3 1/4" x 10" 45 Degree	**8**		
	3 1/4" x 10" Side 90 Degree	**33**		
	3 1/4" x 10" x 6" Round	**2**		
	3 1/4" x 10" x 6" 90 Degree	**4**		
	6" Round Wall Cap w Damper	**24**		
	3 1/4" x 10" Wall Cap w Damper	**24**		
	6" Round Roof Cap	**33**		
TOTAL EQUIVALENT FEET SHOULD BE LESS THAN 100				

VENTED INSTALLATION

STEP 1. After unboxing, remove both stainless steel filters by pulling on the latches as shown.

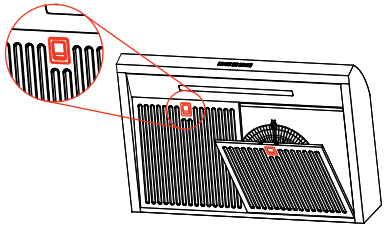

REMOVE THESE 6 SCREWS

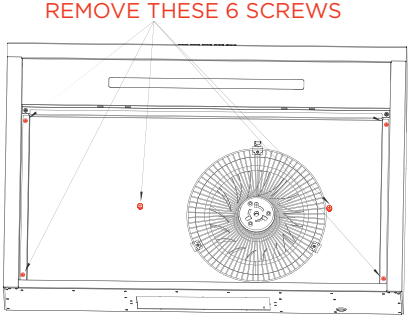

STEP 2. Remove the inner cover by removing the 6 screws indicated in red.

STEP 3. Remove the accessory box. Inside the box are mounting screws, dampers and duct adapters.

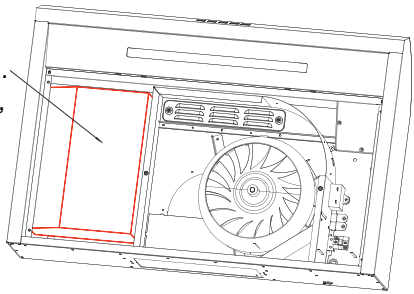

STEP 4a. If you are venting through the top using a 7” round duct - remove the screws holding the rectangular plate and the half round knockout plate with needle nose pliers. Then using the 7 screws, attach the round duct adapter.

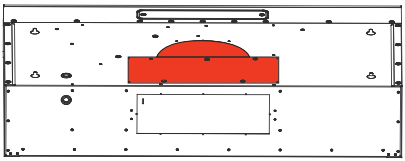

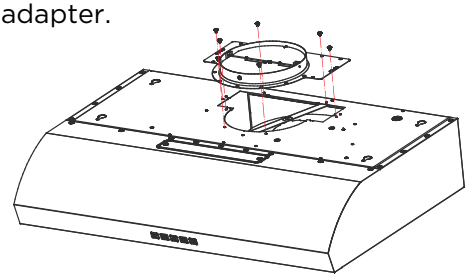

VENTED INSTALLATION CONT.

STEP 4b. If you are top venting using a 3-1/4” x 10” rectangular duct, remove the rectangular top plate but DO NOT REMOVE the half round knock out plate. Use 2 screws to attach the rectangular duct adapter.

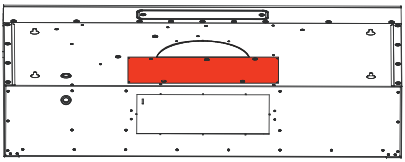

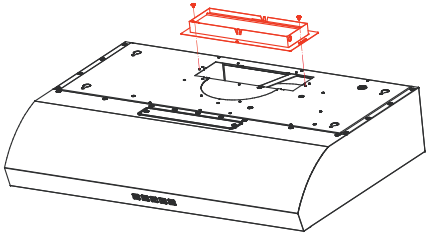

STEP 4c. If you are venting through the rear of the hood, using needle nose pliers and a screwdriver, pry up and remove the knockout plate shown in red and attach the rectangular duct adapter using 2 screws.

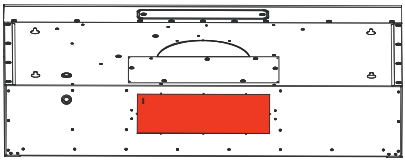

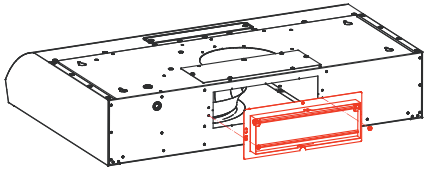

STEP 5. Before proceeding, ensure that the damper moves freely.

Skip the section on RECIRCULATION.

RECIRCULATION (DUCTLESS)

STEP 1. After unboxing, remove both stainless steel filters by pulling on the latches as shown.

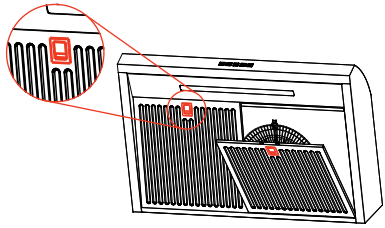

REMOVE THESE 6 SCREWS

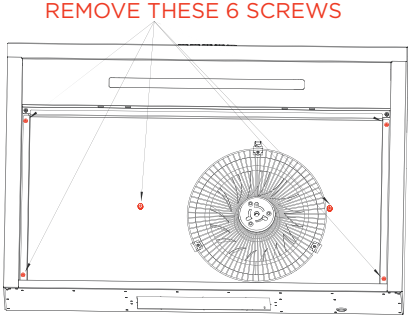

STEP 2. Remove the inner cover by removing the 6 screws indicated in red.

STEP 3. Remove the accessory box. Inside the box are mounting screws, dampers and duct adapters.

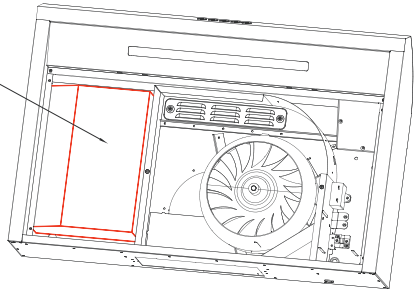

STEP 4. Place the activated charcoal filters (XORFK10 KIT sold separately) on the interior side of the stainless steel filters and secure in place with the wire rods provided.

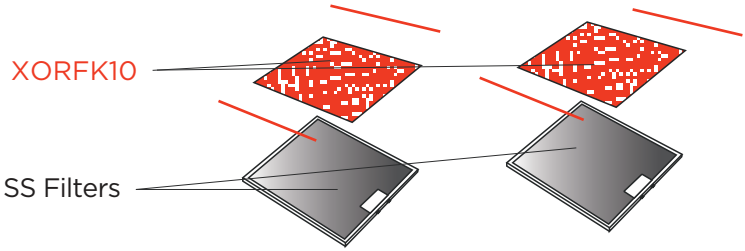

RECIRCULATION (DUCTLESS) CONT.

STEP 5. Remove the plate covering the recirculating vent on the top, front center of the hood.

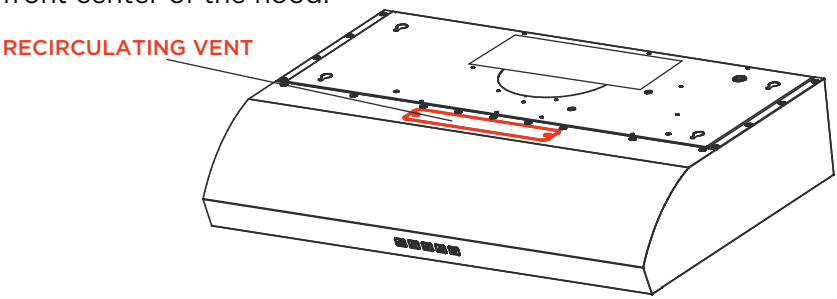

IMPORTANT NOTE: For cabinets deeper than 12”
The Recirculating Vent cannot be restricted in operation. If the cabinet above is more than 12” deep, mount the hood farther out from the wall ensure the vent is clear.

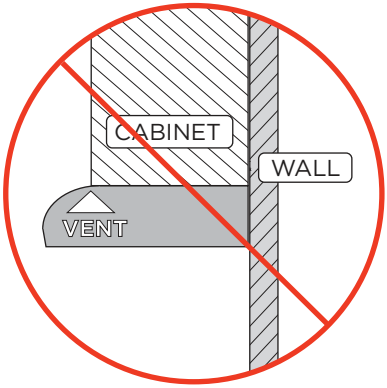

VENT BLOCKED

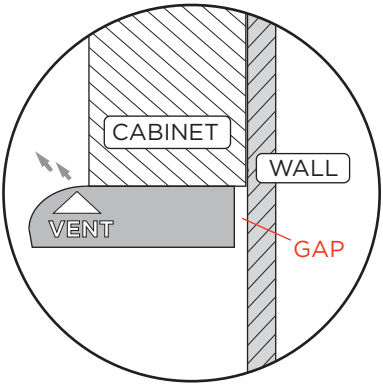

VENT OPEN PROPERLY

Proceed to HOOD INSTALLATION page 17

HOOD INSTALLATION

CAUTION: TEAM LIFT - To prevent injury and/or damage to the unit use two or more people to lift, carry or hold the hood in place while it is being secured.

CAUTION: If venting outside, ensure the ducting is unobstructed, and the damper is operating freely. Use smooth, rigid metal ducting only.

Determine what type of cabinet you are mounting to:

FRAMED CABINET

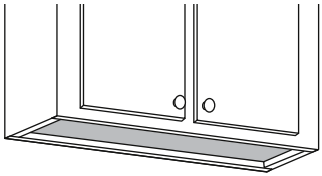

FRAMELESS CABINET

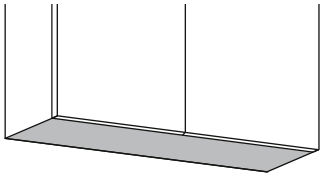

Step 6. A framed cabinet will require the installation of wooden spacers to bring the bottom of the cabinet flush with the frame and allow the mounting screws to fully engage.
The spacers must extend in 3-1/2” from either side.

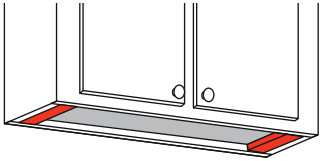

Step 7: Use a hole saw to bore a 1-1/2” hole for the electrical cord and if venting, cut the holes for the passage of your ductwork.

HOOD INSTALLATION CONT.

USEFUL DIMENSIONS:

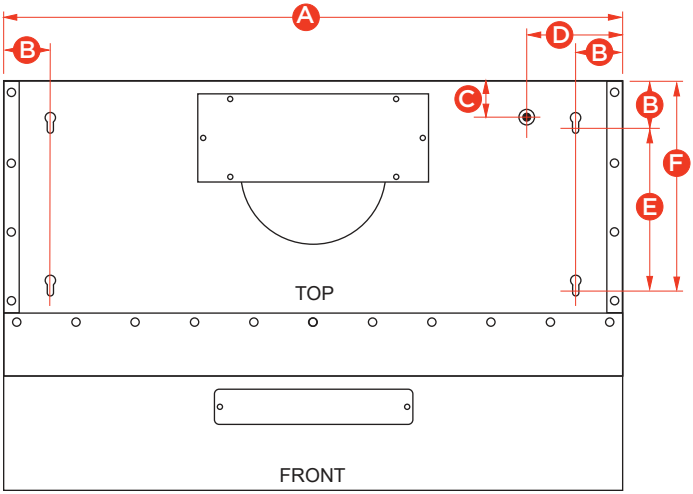

A	29-11/16”
B	2-5/16”
C	1-3/4”
D	4-5/8”
E	7-7/8”
F	10-3/16”

TOP VENT - ROUND DUCT LOCATION

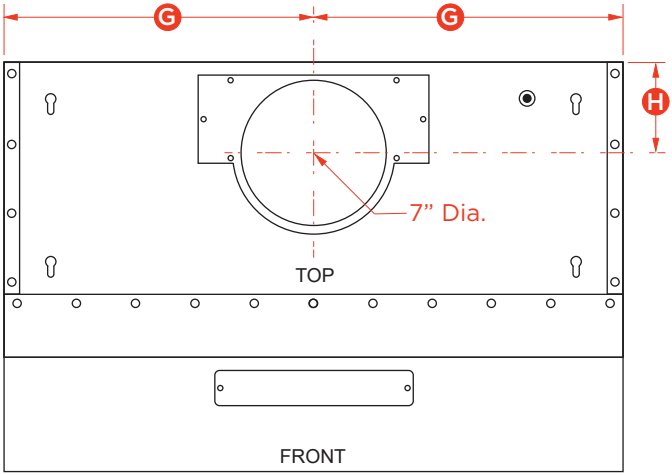

HOOD INSTALLATION CONT.

TOP VENT - RECTANGULAR DUCT LOCATION

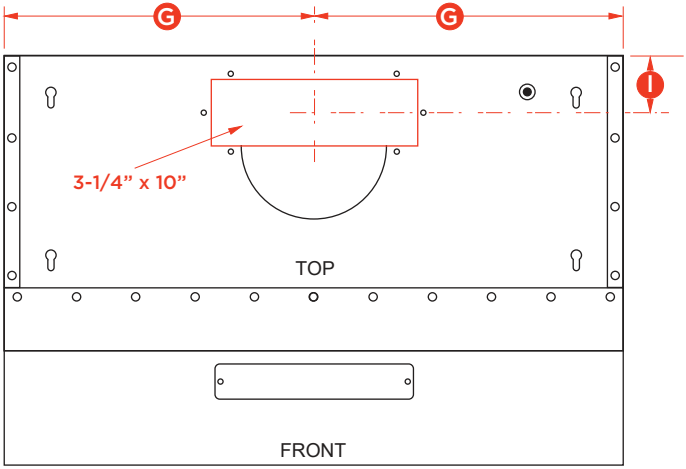

G	14-15/16"
I	1-3/16"
J	3/4"
K	4-5/8"
L	3/4"
M	6"
N	3-1/4"
O	2"

REAR VENT - RECTANGULAR DUCT LOCATION

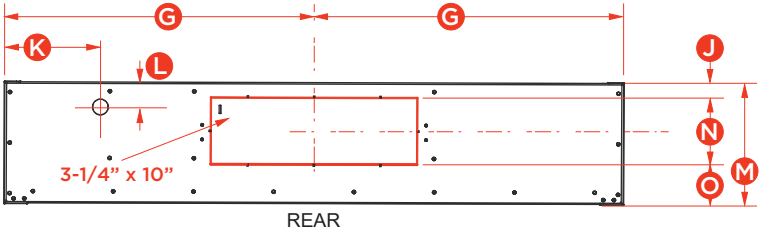

ELECTRICAL CONNECTION

Your XOE unit come pre-wired with a 3 prong cord set.
However, if you wish to hardwire the hood instead - follow these steps.

1. Route the power cord to the junction box inside the hood.

2. Using listed conduit fittings and connectors, use the internal wire clamp to secure the wiring entering the hood. Then connect each power supply line to the appropriate wire folloowing this color convention.

BLACK = HOT LEG

WHITE = NEUTRAL

GREEN/YELLOW = GROUND

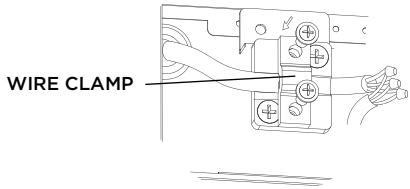

Polarity must be observed.

Unit must be properly grounded.

Use a double throw disconnect switch.

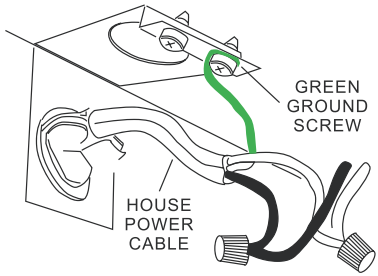

3. Replace the box cover

4. Replace the Anti-grease filters.

All wiring must be in compliance with national electrical code, ANSI/NFPA 70-1999 and all local codes and regulations.

HOOD INSTALLATION CONT.

Step 8. Lift the hood into place, aligning the duct if venting, exercising care not to pinch electrical wiring. Fasten in place with 6 screws as shown here. Center 2 screws optional for added support. If venting check dampers for free operation and tape seal all duct joints.

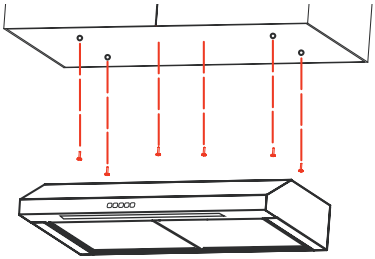

Step 9. Connect the electrical power following the steps on the page 18.

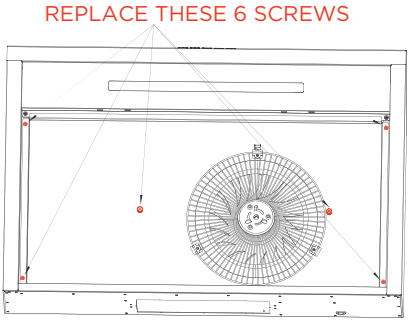

Step 10. Replace the interior liner removed in Step 2.

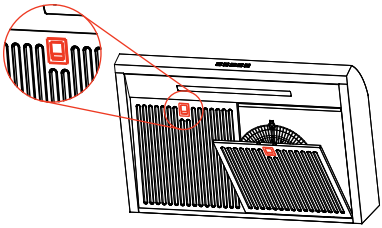

Step 11. Replace the stainless steel grease filters removed in Step 1 and you are all done.

When disposing of the packing materials - please recycle.

EASY TO OPERATE

Your new XO Hood is easy to operate with 5 illuminated, electronic touch sensor buttons.

0 1 2 3 4

0 - Turns the unit on and off, hold this button for 2 seconds and it will initiate the 5 minute time delay feature.
1 - Activates low speed
2 - Activates medium speed
3 - Activates high speed
4 - Turns the LED light panel on and off.

EASY TO MAINTAIN

Regular cleaning and maintenance is the key to long life and peak performance of any equipment.

- **The Stainless filter** is used to trap any grease particles suspended in the air, therefore is subject to saturation (the time it takes for the filter to become saturated depends on the way in which the appliance is used). The **grease filters** should be cleaned frequently. Use a warm detergent solution. Grease filters are a dishwasher safe. If you are recirculating the exhaust, the carbon filters cannot be washed and must be replaced at least twice a year.

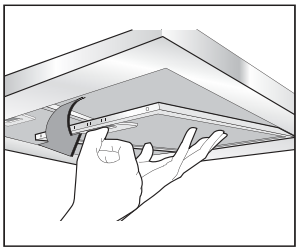

- To prevent potential fire hazards, the Stainless Steel grease filters should be washed a minimum of every two months (Dishwasher Safe).
- After a few washes, the filter color may change. This does not affect performance and it does not require replacement.
- The XO part number for the carbon filters which do which do require replacement is XORFK10.
Failure to maintain the grease filters may present a fire hazard.

CLEANING STAINLESS STEEL:
Do not use corrosive detergents, abrasive detergents or oven cleaners.
Do not use any product containing chlorine bleach or any product containing chloride.
Do not use steel wool or abrasive scrubbing pads which will scratch and damage surface.

Cleaning Stainless Steel Clean periodically with warm soapy water and clean cotton cloth or micro fiber cloth. Always rub in the direction of the stainless steel grain. To remove heavier grease build up use a liquid degreaser detergent. After cleaning use a non-abrasive stainless steel polish/cleaners, to polish and buff out the stainless luster and grain. Always rub lightly, with a clean cotton cloth or a micro fiber cloth and buff in the direction of the stainless steel grain.

Any painted surfaces should be cleaned with warm water and detergent only.

TROUBLE SHOOTING

HOOD WILL NOT OPERATE:
Check to see if the power supply is connected properly.
Is the power turned on at the breaker / fuse box?
Check wiring between the switch and control board.

HOOD VIBRATES WHILE RUNNING:
Is the hood secured properly to the wall / cabinet?
Is the blower motor securelty fastened?
Is the fan damaged and out of balance?

HOOD IS NOT MOVING MUCH AIR:
Is the duct undersized?
Is the duct or wall cap clogged with debris?
Is the damper opening properly?

THE LIGHTS WORK BUT THE BLOWER DOES NOT:
Check if the fan is scraping or jammed.
If the fan spins freely, the motor may need replacement.

THE HOOD IS NOT VENTING PROPERLY:
Check the hood mounting height. (see page 10)
Does the ducting comply with all the recommendations in this manual?
Is the outside wall vent opening against the wind?
Are you using the high speed setting during heavy cooking?
Is there a cross draft from open windows or doors?

LIGHTS ARE NOT WORKING PROPERLY:
If the light bar is partially lit - replace the light bar module.
If the light bar not lighting at all, Check wiring between the switch and control board. If the connections are sound - replace the light bar module.
If that does not resolve the issue, call for service.

DANGER: Turn off the power circuit breaker or the power switch on the junction box before installing or servicing this unit. Touching circuitry inside the range hood while it is energized will result in death or serious injury.

NEED PARTS OR SERVICE
VISIT WWW.XOAPPLIANCE.COM and click on PARTS STORE
OR CALL US AT 973-403-8900

WE'VE GOT YOUR BACK

90 DAY LOVE IT or LEAVE IT. For 90 Days all our products are backed by our unique Love it or Leave it Guarantee. **ONE-YEAR PARTS & LABOR LIMITED WARRANTY.** XO warrants to the original purchaser of this new XO ventilation unit, the cabinet and all parts thereof, to be free from defects in material or workmanship under normal and proper use and maintenance as specified by XO and upon proper installation and start-up in accordance with the instruction packet supplied with each XO unit. XO's obligation under this warranty is limited to a period of one (1) year from the date of original purchase.

WARRANTY CLAIMS. All claims for labor or parts must be made directly through XO. All claims should include: model number and serial number of cabinet, proof of purchase, and date of installation.

WHAT IS NOT COVERED BY THIS WARRANTY. XO's sole obligation under this warranty is limited to either repair or replacement of parts, subject to the additional limitations below. This warranty neither assumes nor authorizes any person to assume obligations other than those expressly covered by this warranty. Open box, factory seconds, scratch and dent, floor models and commercial applications are excluded from these warranties.

WARRANTY IS NOT TRANSFERABLE. This warranty is not assignable and applies only in favor of the original purchaser/ user at the original installation location. Any such assignment or transfer shall void the warranties herein made and shall void all warranties, express or implied, including any warranty or merchantability or fitness for a particular purpose.

IMPROPER USAGE. XO assumes no liability for parts or labor coverage for component failure or other damages resulting from improper usage or installation or failure to clean and/or maintain product as set forth in the warranty packet provided with the unit. **ALTERATION OR NEGLECT.** XO is not responsible for the repair or replacement of any parts that XO determines have been subjected after the date of manufacture to alteration, neglect, abuse, misuse, accident, damage during transit or installation, fire, flood, or act of God.

IMPROPER ELECTRICAL CONNECTIONS. XO is not responsible for the repair or replacement of failed or damaged components resulting from electrical power failure, high or low voltage, use of extension cords, or improper grounding of the unit.

YOUR RIGHTS UNDER STATE LAW. This warranty gives you specific legal rights and you may have other rights that vary from state to state. Some states do not allow the exclusion or limitation of consequential damages or a limitation on how long an implied warranty lasts, so the above exclusion or limitation may not apply to you.

OUTSIDE U.S. This warranty does not apply to, and XO is not responsible for, any warranty claims made on products sold or used outside the 48 continental United States.

To obtain service:

Call 973-403-8900 | email service@xoappliance.com | or submit a request on our website
www.xoappliance.com

XO LOVE IT OR LEAVE IT
100% GUARANTEED

1 YEAR
PARTS + LABOR WARRANTY