XO PERFORMANCE GRILL CART ASSEMBLY INSTRUCTIONS

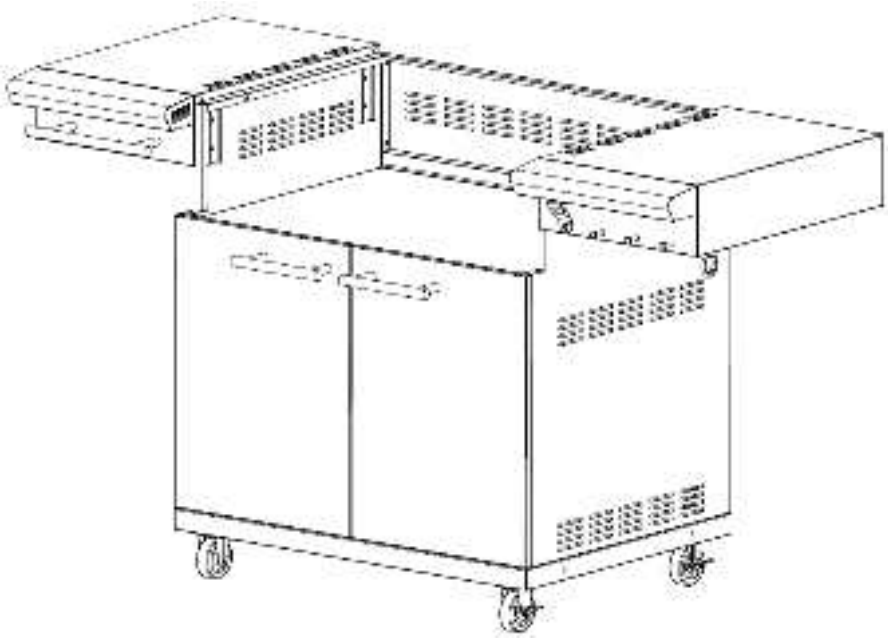

XO PERFORMANCE GRILL CARTS

MODELS:
XOG32CARTXLT
XOG40CARTXLT

Warning: Heavy Weight Hazard!

Use two or more people to move, assemble, or install the grill to avoid back injury. Never leave children unattended near the grill or cabinets.

ATTENTION:

Need help or spare parts? For fastest service, contact XO at (973) 403-8900 or www.xoappliance.com Do not return to the retailer.

THIS INSTRUCTION MANUAL CONTAINS IMPORTANT INFORMATION NECESSARY FOR THE PROPER ASSEMBLY AND SAFE USE OF THE APPLIANCE. PLEASE READ AND FOLLOW ALL WARNINGS AND INSTRUCTIONS THAT ACCOMPANY BOTH THIS CART AND THE GRILL BEFORE ASSEMBLING AND USING THE APPLIANCE. THIS PRODUCT IS DESIGNED FOR OUTDOOR USE ONLY. DO NOT OPERATE IN ANY ENCLOSED SPACE.
FAILURE TO FOLLOW ALL SAFETY INSTRUCTIONS MAY RESULT IN **PROPERTY DAMAGE, INJURY OR DEATH.**

XO APPLIANCE

When buying any XO appliance,
you can be confident you have chosen a
high quality, innovative and stylish product
from a company that cares about you!

If you require service or have questions,
there are 2 ways to contact our appliance experts;

Online @ https://xoappliance.com/priority-service-for-your-xo-product/

Or by phone 973-403-8900

CONGRATULATIONS

on purchasing your XO.
Before you proceed, take just a
moment to register your XO at:

www.xoappliance.com/register-your-product/

Or simply scan here to be taken
to the registration page...

REGISTRATION HELPS YOU BY -

Ensuring warranty coverage should you need service
Providing ownership verification for insurance purposes
XO can notify you in the event of product changes or recalls.

Unpacking

- Begin by placing the package on a covered flat surface.
- Remove all cardboard, foam packaging material and nylon bags.
- Use the flattened cardboard as an assembly surface, then dispose / recycle all packaging materials afterward.
- Verify all the contents in the box and gather the required tools. See "Tools Needed" below.

Product Inspection

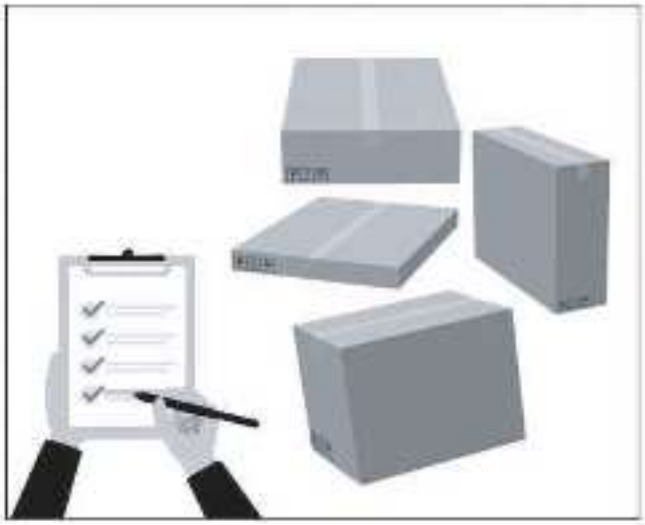

- Check to see all parts are received as per the order placed.
- Contact XO Appliance at www.xoappliance.com or (973) 403-8900 regarding any missing parts.
- Inspect the products for any damages before starting the installation.
- Go through the installation instructions carefully before starting the installation.

VISIBLE LOSS OR DAMAGE

Be certain any visible damage to the carton is noted on freight bill or express receipt and signed by the person making delivery.

FILE CLAIM FOR DAMAGES IMMEDIATELY, regardless of extent of damage.

CONCEALED LOSS OR DAMAGE

If damage is unnoticed until the grill is unpacked, notify the transportation company or carrier immediately and file a "concealed damage" claim with them. This should be done within (5) days of the date delivery is made to you. Be sure to hold on to the container for inspection. We cannot assume responsibility for damage or loss incurred in transit.

Tools Needed

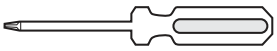

1 x #2 Phillips head screwdriver

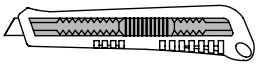

1 x Box Cutter

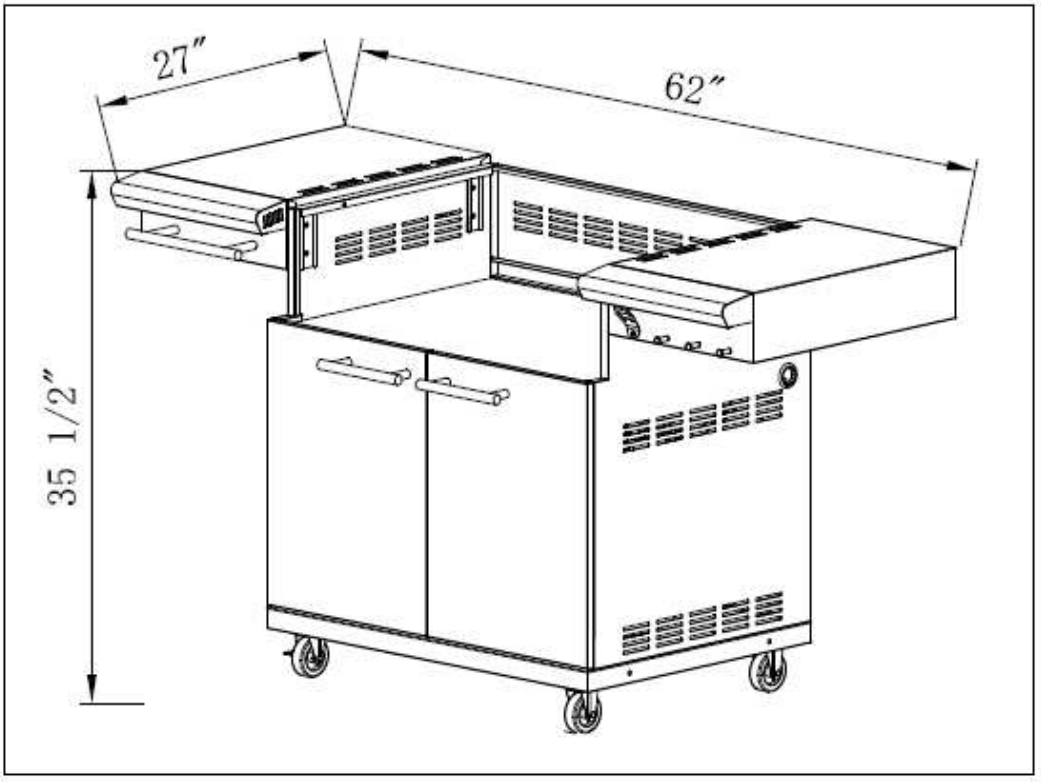

XOG32CARTXLT

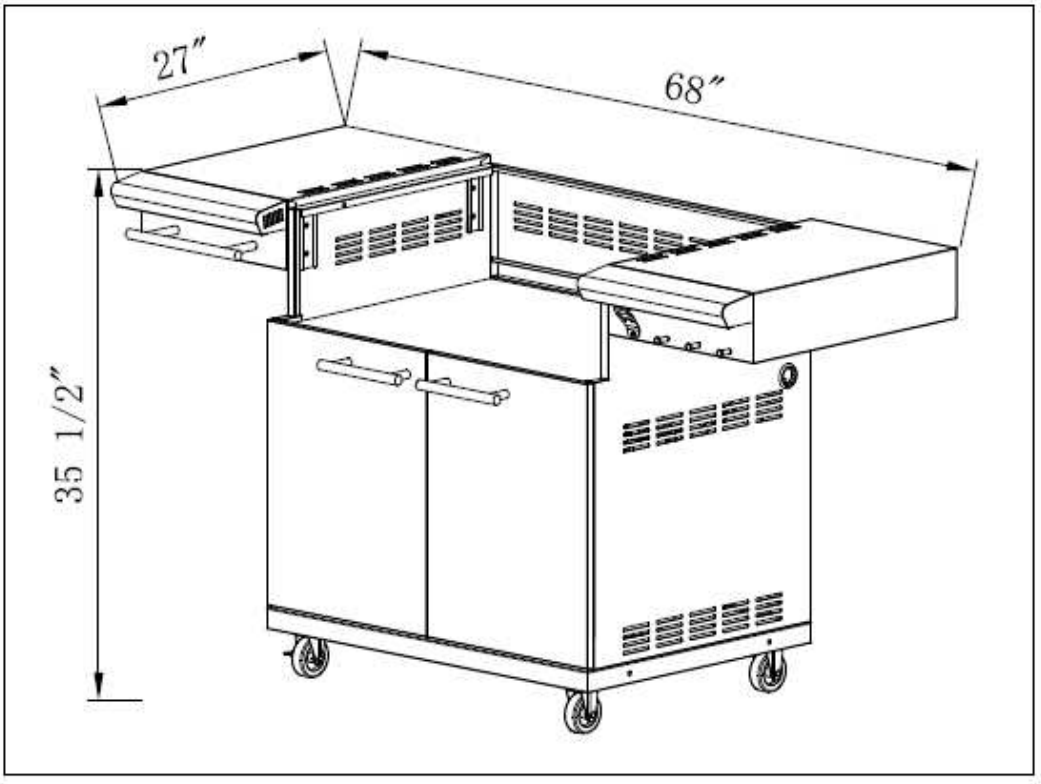

XOG40CARTXLT

Spare Parts Diagram

XOG32CARTXLT | XOG40CARTXLT

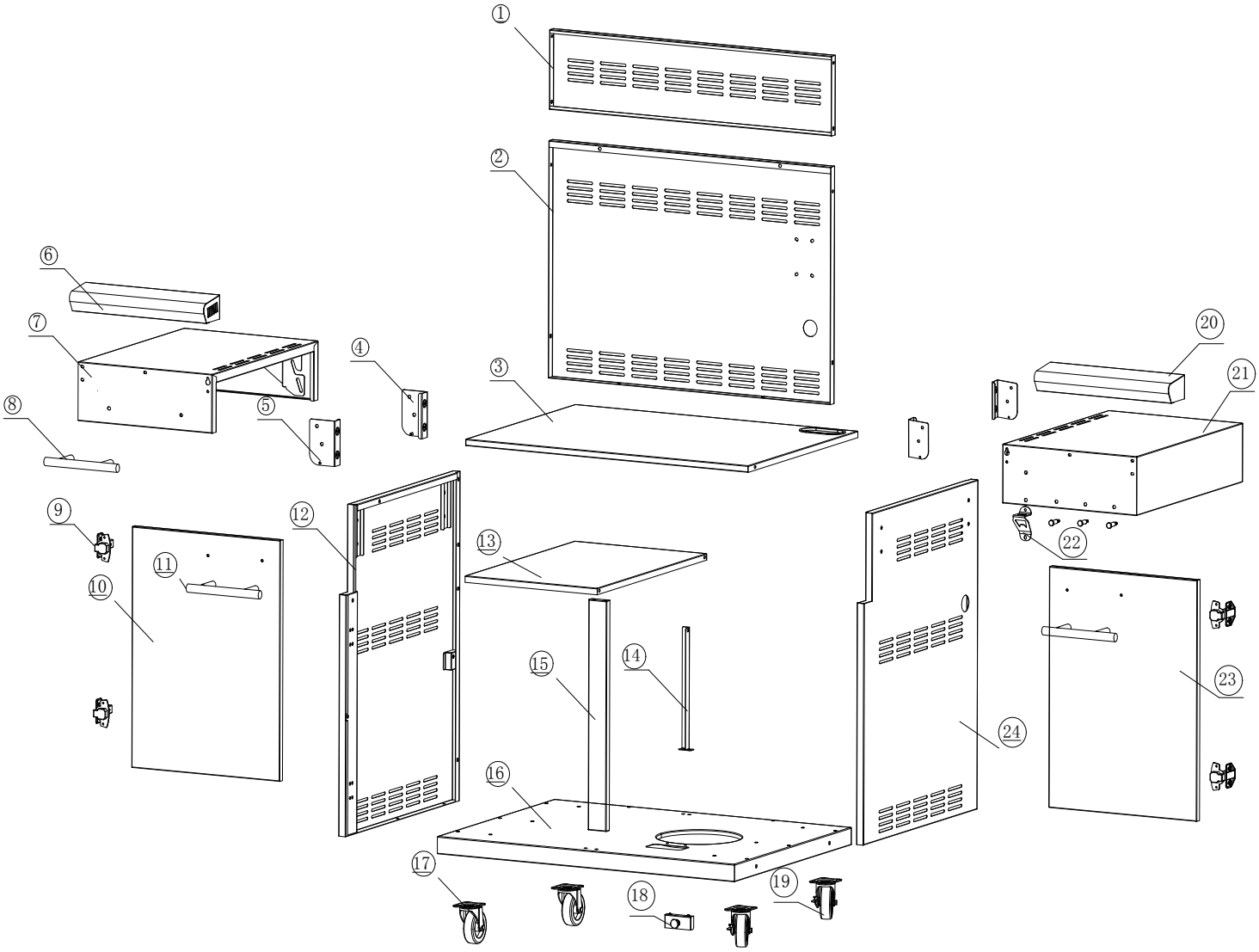

Spare Parts List

XO GRILL CARTS (32"&40")			
S.No.	**Spare Part SKU**	**Description**	**Qty**
1.	XOPG64974	Cart rear upper panel	1
2.	XOPG64975	Cart rear lower panel	1
3.	XOPG64976	Top panel	1
4.	XOPG64978	Side shelf left bracket	2
5.	XOPG64979	Side shelf right bracket	2
6.	XOPG64980	Left side shelf front	1
7.	XOPG64982	Left side shelf	1
8.	XOPG64984	Side handle	1
9.	XOPG64985	Hinge	4
10.	XOPG64986	Left Door	1
11.	XOPG64988	Door handle	2
12.	XOPG64989	Cart left side panel	1
13.	XOPG64991	Center shelf	1
14.	XOPG64992	Back panel support	1
15.	XOPG64993	Front panel support	1
16.	XOPG64977	Bottom panel	1
17.	XOPG64994	Casters without locks	2
18.	XOPG64996	Cylinder lock down	1
19.	XOPG64995	Casters with locks	2
20.	XOPG64981	Right side shelf front	1
21.	XOPG64983	Right side shelf	1
22.	XOPG64997	Bottle opener	1
23.	XOPG64987	Right Door	1
24.	XOPG64990	Cart right side panel	1

Parts Supplied

1 x Cart Rear Upper Panel	1 x Cart Rear Lower Panel	1 x Top Panel	2 x Side Shelf Left Bracket	2 x Side Shelf Right Bracket
1 x Left Side Shelf Front	1 x Left Side Shelf Front	1 x Side Handle	4 x Hinge	1 x Left Door
2 x Door Handle	1 x Cart Left Side Panel	1 x Center Shelf	1 x Back Panel Support	1 x Front Panel Support
1 x Bottom Panel	2 x Caster Without Lock	1 x Gas Tank Lock	2 x Caster With Lock	1 x Right Side Shelf Front
1 x Right Side Shelf	1 x Bottle Opener	1 x Right door	1 x Cart Right Side Panel	

Hardware

M6 Shoulder Bolt
(4 PCS)

M4x12 Bolt
(4PCS)

M6x12 Bolt
(16PCS)

M4x12 Countersunk Screw
(24PCS)

M5x10 Bolt
(54PCS)

M4 Nut (4PCS)

Tool Peg (3PCS)

Screwdriver
(1PC)

Use 16 - M6x12 bolts to install the Casters onto the Base Plate #(16) There are two caster types, one with locks and one without. First install the casters without locks #(17) and then the casters with the locks #(19). Make sure the Locking Casters are located on the left hand side.

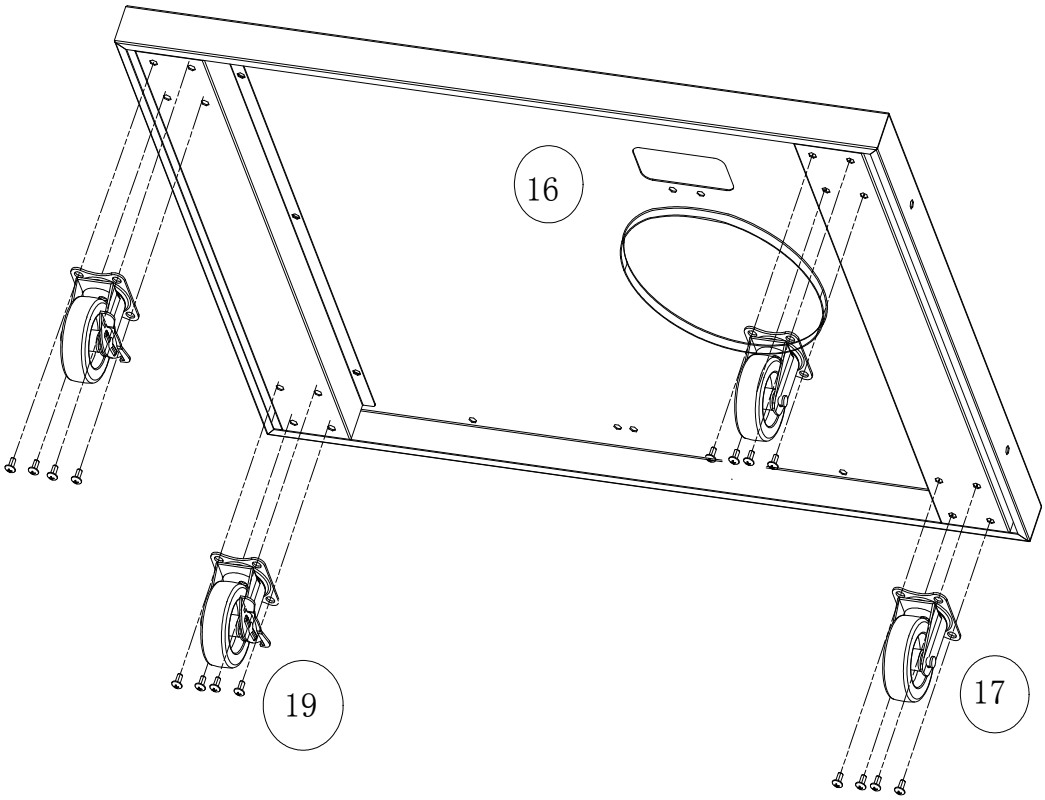

Both the Left and Right Side Panels #(12) and #(24) will be attached with 3 - M6x12 bolts each.

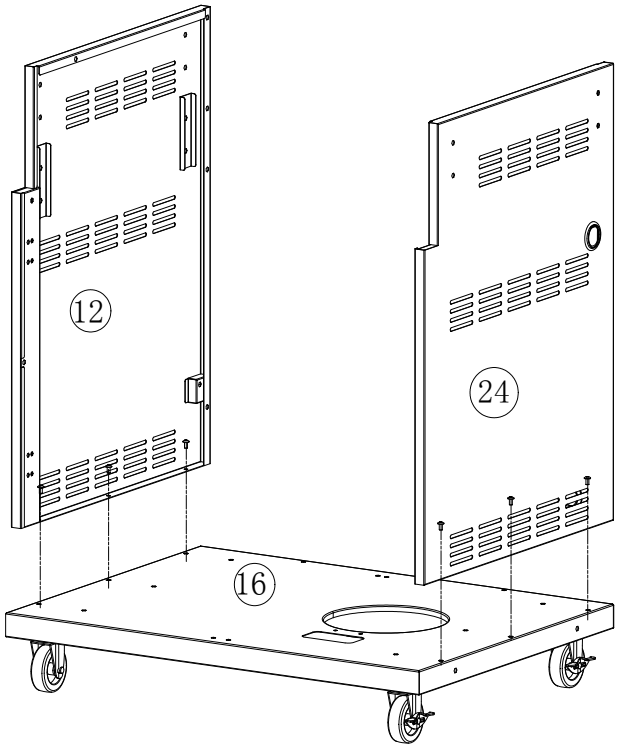

Place the Cart Rear Lower Panel #(2) between the Left #(12) and Right #(24) Side Panels. Use 6 - M5x10 bolts to fasten to the sides and the base.

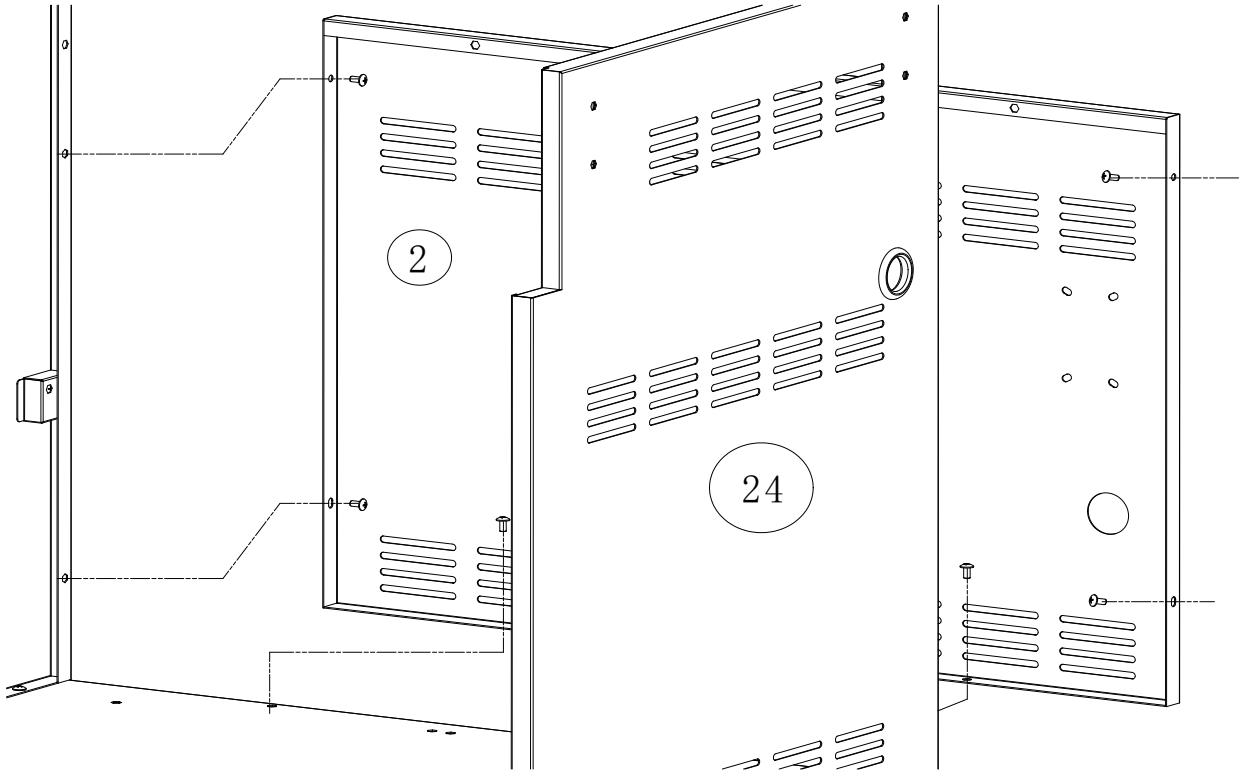

The Cart Upper Back Panel #(1) will be connected using 4 - M5x10 bolts. There are 2 connection points located on each side.

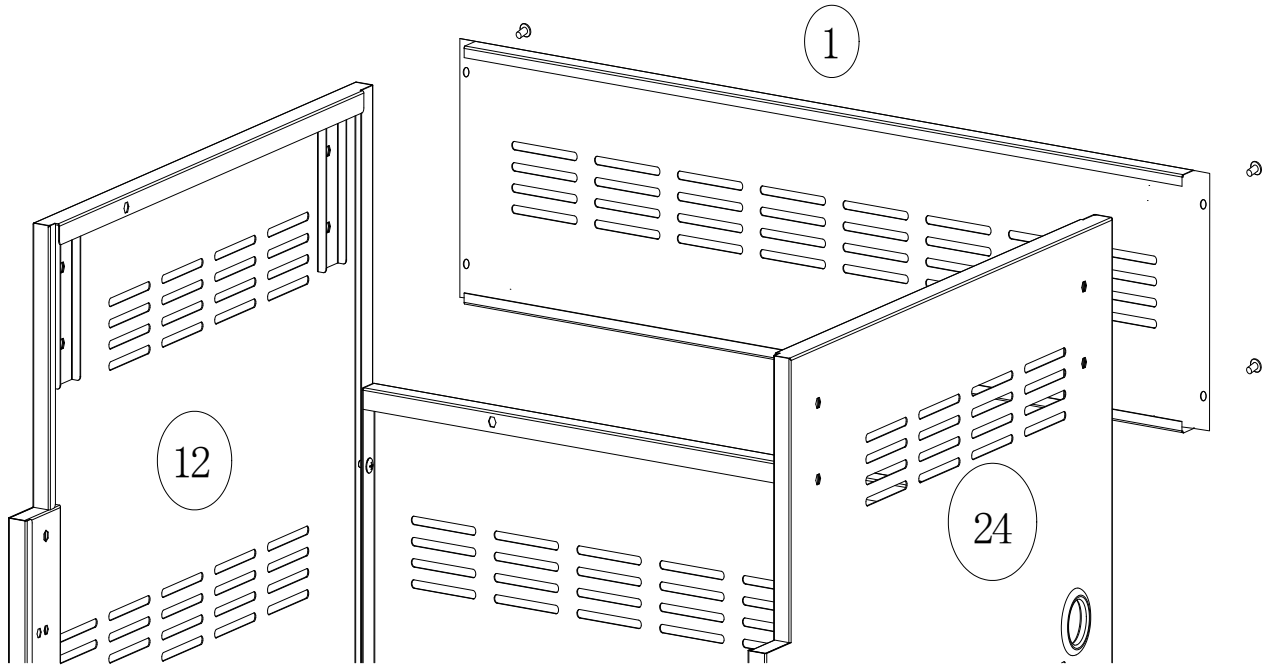

USING 4 - M4X12 BOLTS, MOUNT THE 12V TRANSFORMER TO THE CART REAR LOWER PANEL ON THE RIGHT HAND SIDE AS SHOWN BELOW. THIS WILL BE USED LATER TO POWER THE INTERIOR HALOGEN LIGHTS AND CONTROL PANEL LEDS.

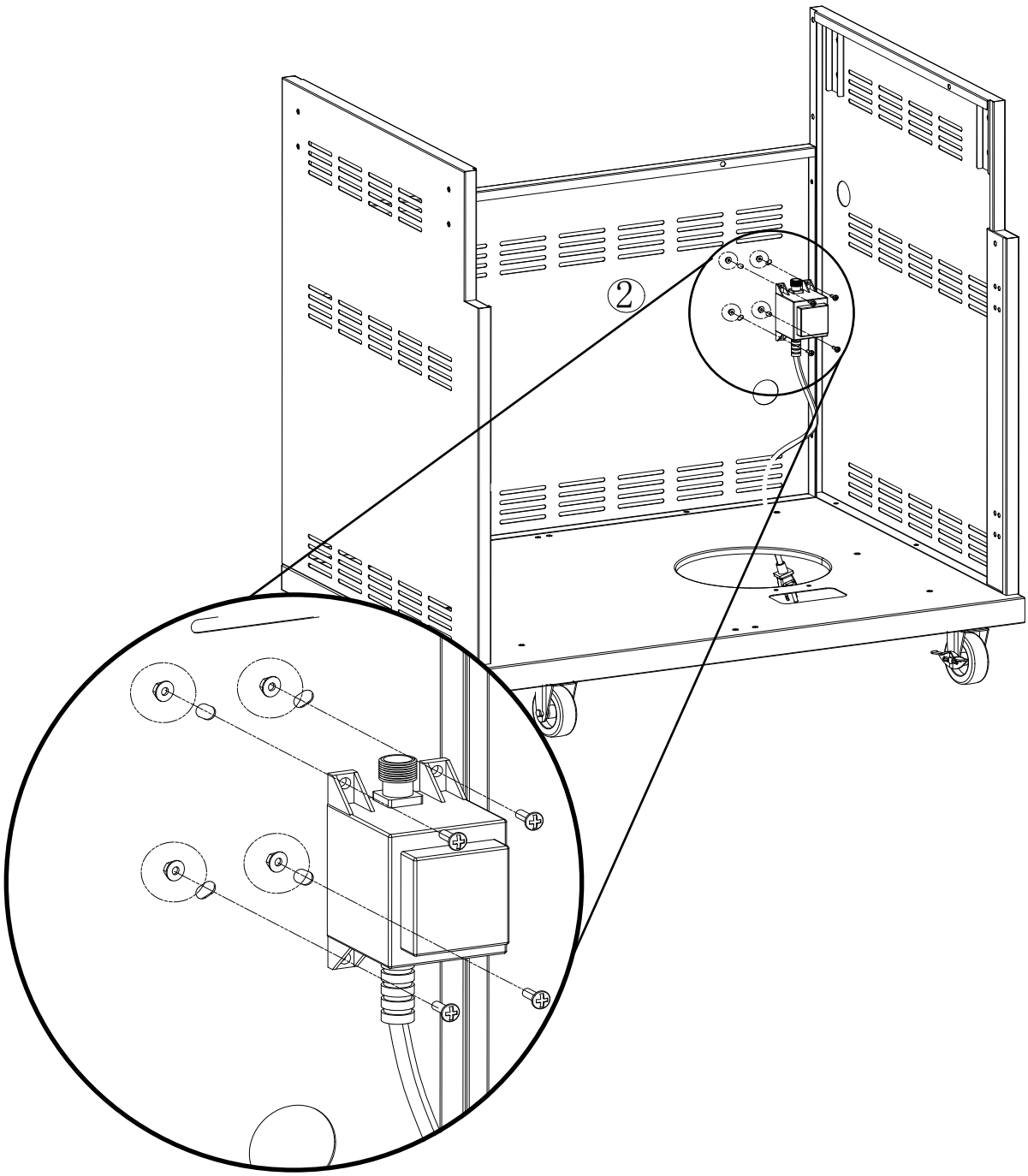

Attach the Back Panel Support #(14) to the Bottom Panel #(16) with 2 - M5x10 bolts.

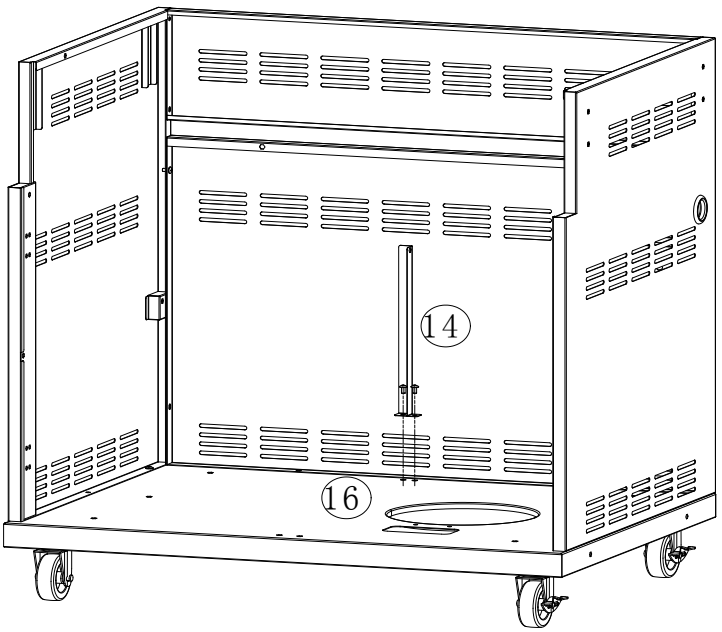

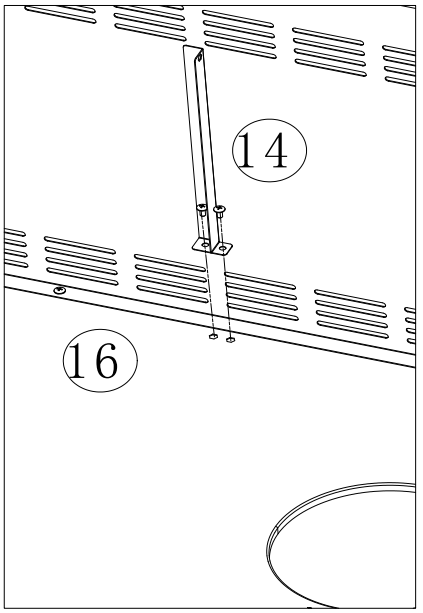

Install the Front Panel Support #(15) to the Bottom Panel #(16) with 2 - M5x10

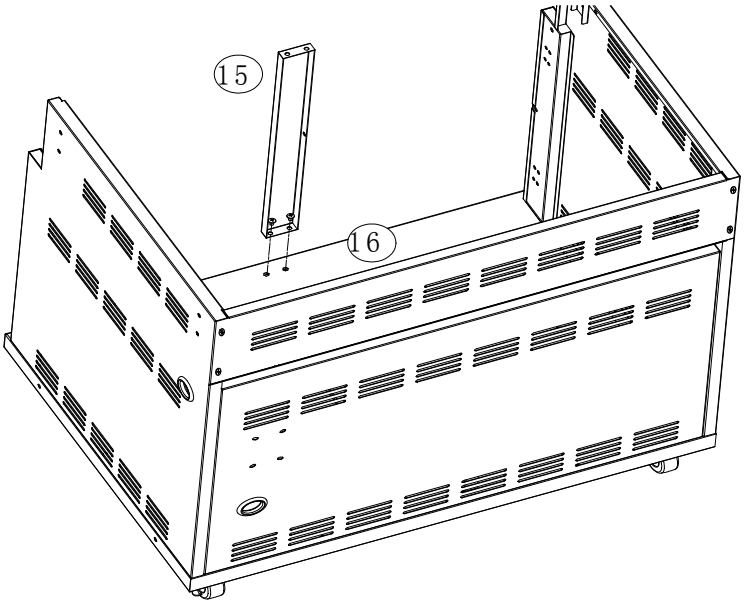

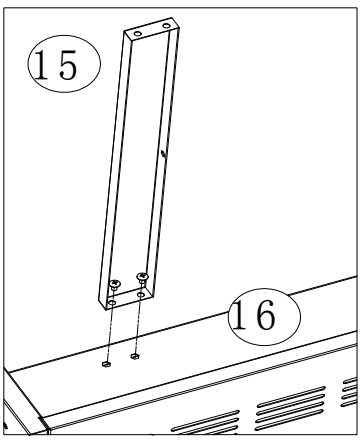

Attach the Center Shelf #(13) to the Left Side Panel #(12), Front Panel Support #(15) and Back Panel Support #(14) with 4 - M5x10

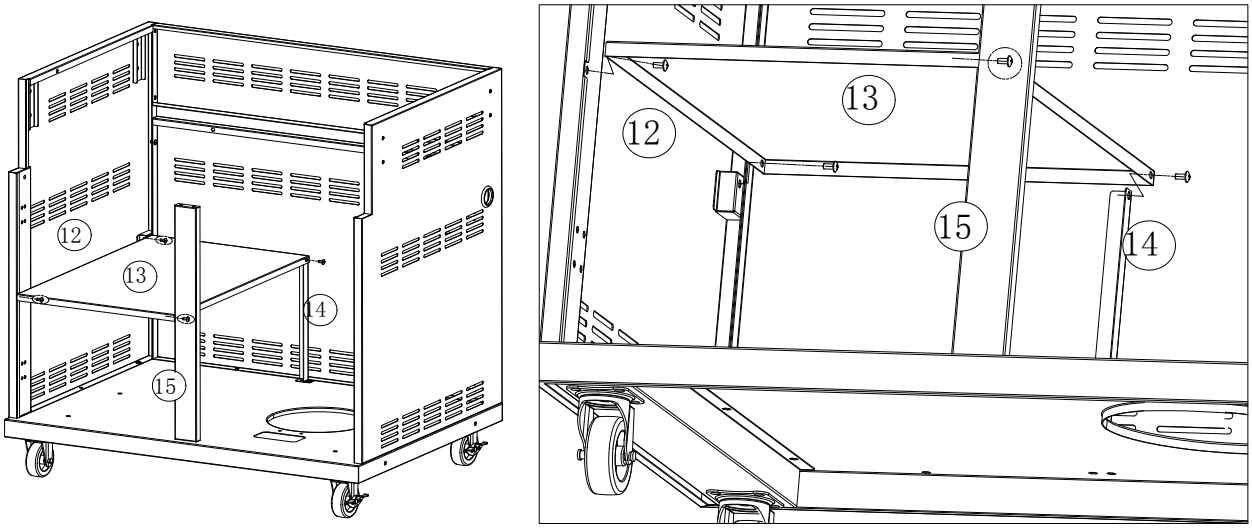

Attach the Top Panel # (3) to the Left Side Panel # (12), Front Panel Support # (15), Cart Rear Upper Panel # (1) and Right Side Panel #(24) with 6 - M5x10 bolts

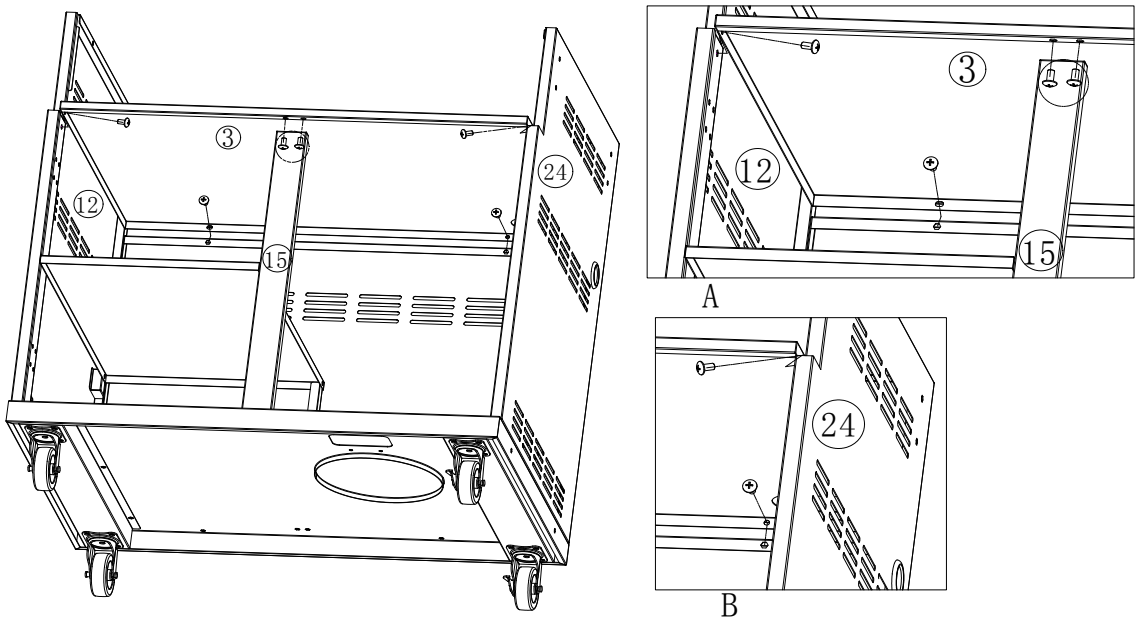

Install the Gas Tank "Lock In Place" Bracket #(18) below the Bottom Panel #(16) as shown with 2 - M5x10 bolts

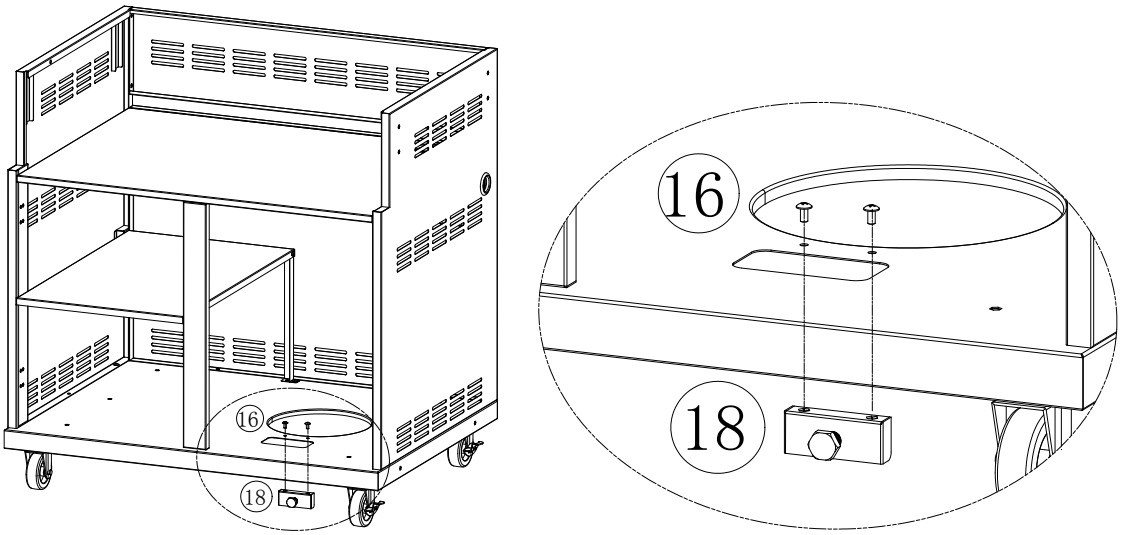

Install the Handles and Hinges to the Left and Right Doors #(10, 23). Remove the Handle and hardware #(11) and attach to each Door #(10 , 23) as below using 2 - M5x60 bolts and spacers.

Install 2 Hinges #(9) using 2 - M4x12 countersunk screws to both the Left and Right Doors #(10, 23).

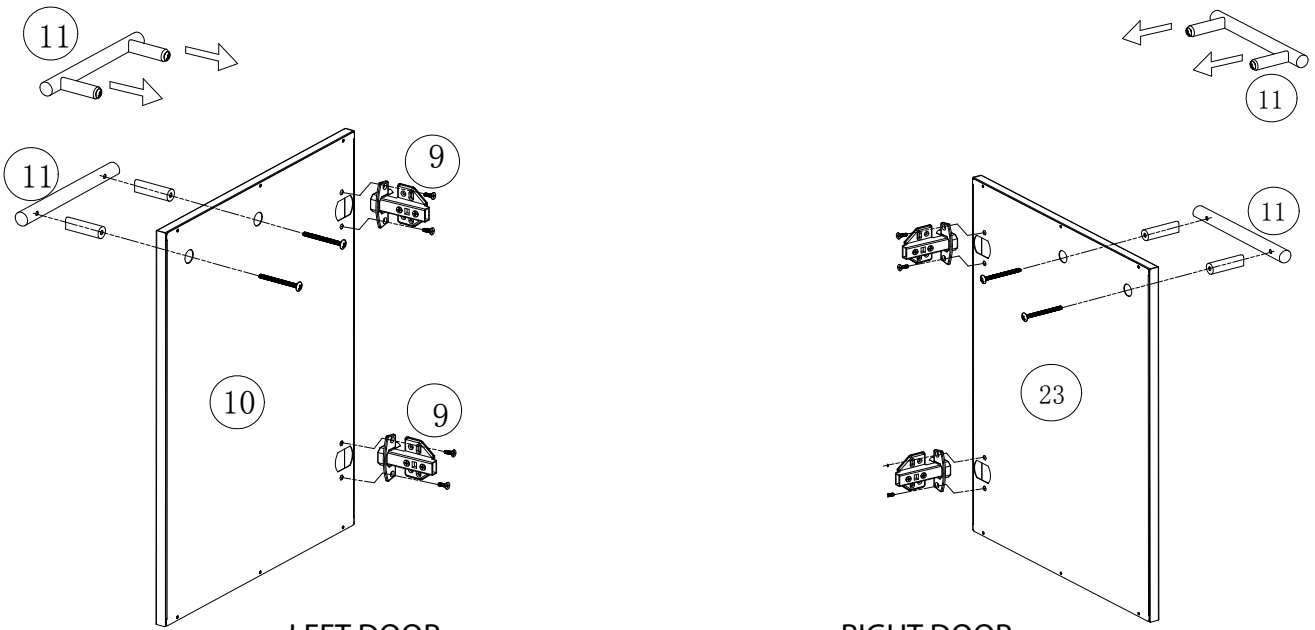

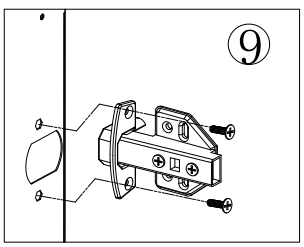

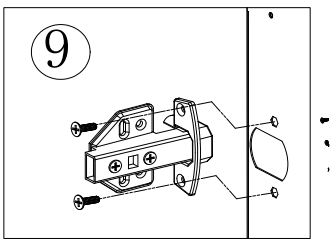

Attach the Left Door / Hinge Assembly to the Cart Left Side #(12) with 8 - M4x12 screws. Attach the Right Door / Hinge Assembly to the Cart Right Side #(24) with 8 - M4x12 screws.

LEFT SIDE

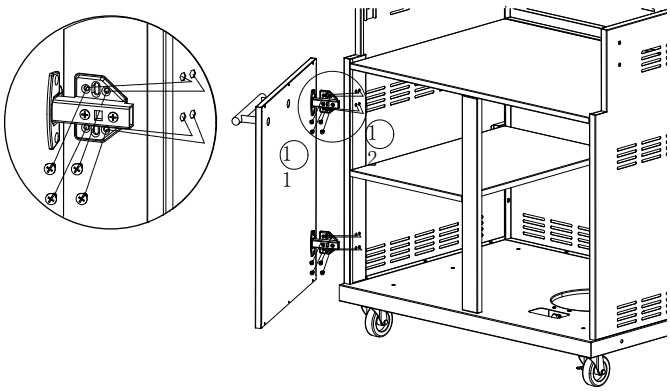

RIGHT SIDE

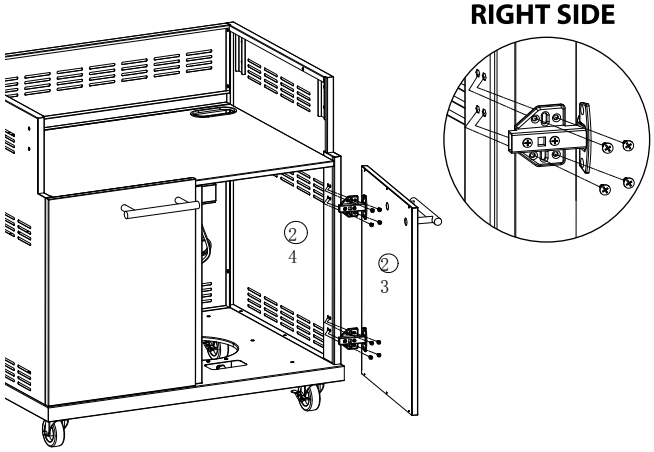

To adjust the gap between the doors - turn Screw A on the hinges.

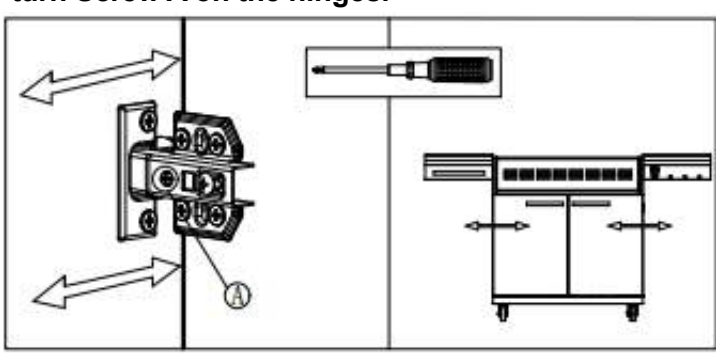

To adjust the gap between the door and the frame - turn Screw B on the hinges.

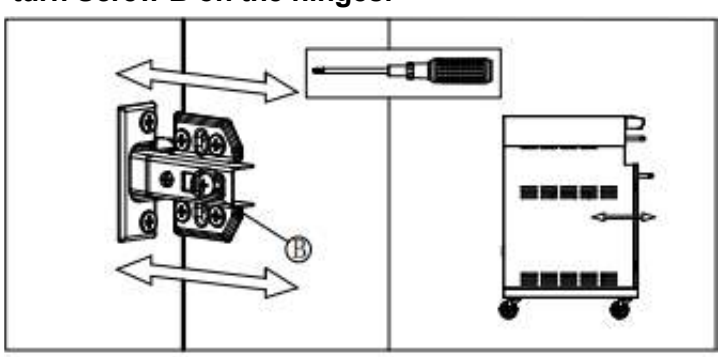

Attach a Side Shelf Left Bracket #(4) and a Side Shelf Right Bracket #(5) to the left side panel as as shown using 2 - M5x10 bolts for each Bracket.

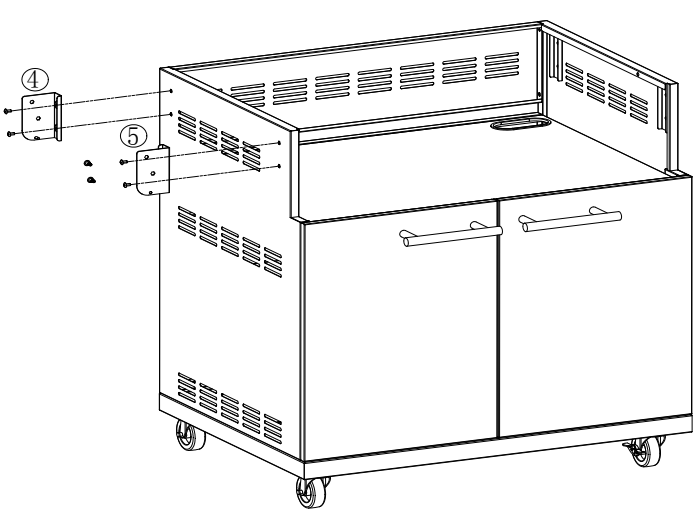

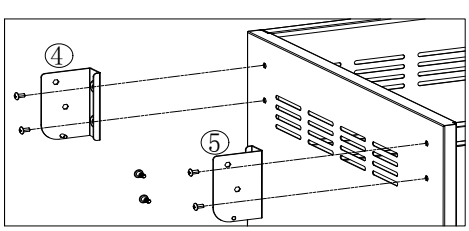

If you are attaching the XO Side Burner Cart - Go to that Manual and attach it at this time.

If you are NOT attaching the Side Burner Cart - proceed with attaching Side Shelf Brackets to the right side of the cart at this time.

To attach the Left Side Shelf Front #(6) to the Left Side Shelf #(7), turn both parts upside down. Start, but do not tighten down 2 - M5x10 bolts as shown below into the Left Side Shelf Front #(6). Align the heads of the bolts with the keyhole slots in the Left Side Shelf #(7) and slide into place to align both parts. Install the additional 3 - M5x10 bolts as shown and tighten all 5 bolts.

LEFT SIDE SHELF

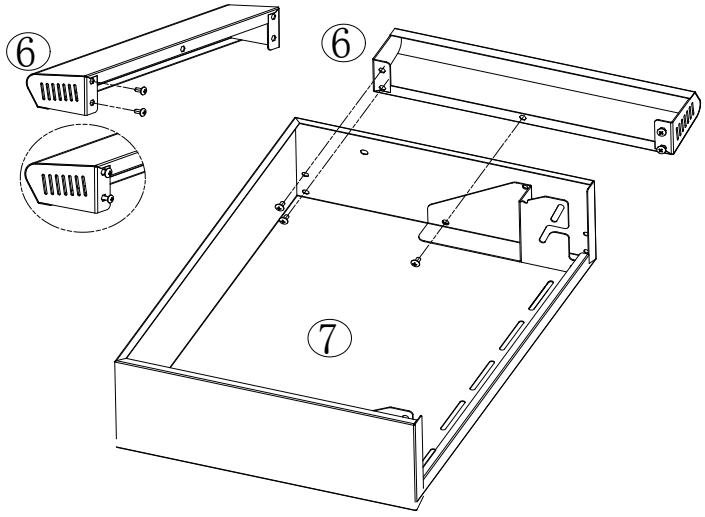

With the Left Side Shelf Assembly still upside down, install the towel holder by removing the 2 - M5x80 bolts from the Side Handle #(8), and using the bolts to install the Side Handle #(8) to the Left Side Shelf #(7) as shown below.

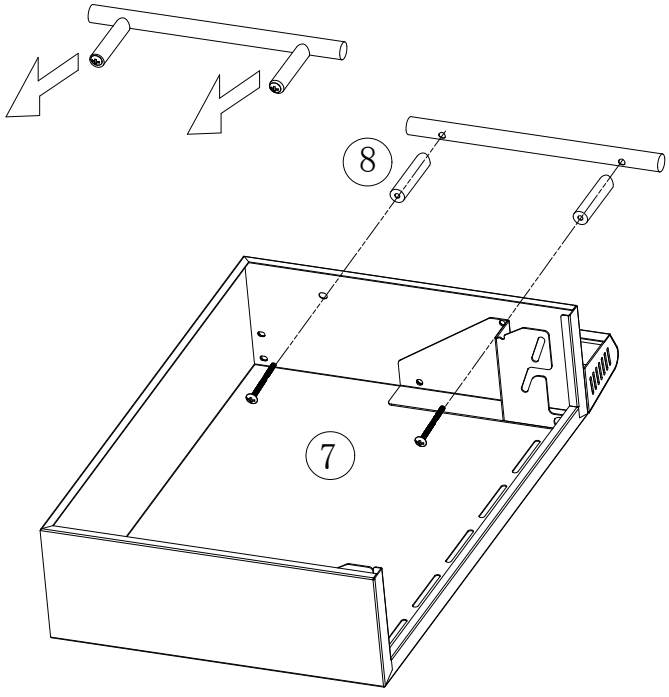

Install an M5x15 shoulder bolt at the top of each Shelf Bracket #(4, 5). After the installation use an additional M5x15 shoulder bolt to install the Side Shelf Assembly to the Shelf Bracket, front and rear as shown.

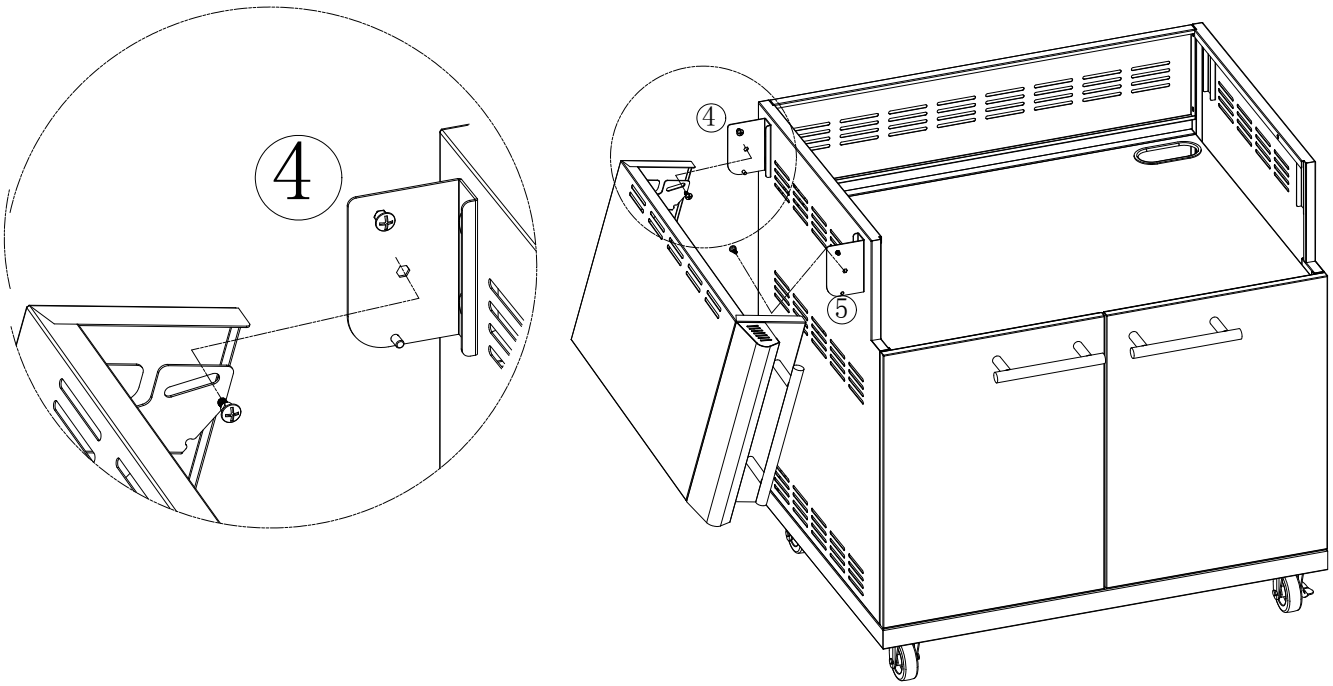

To attach the Right Side Shelf Front #(20) to the Right Side Shelf #(21), turn both parts upside down. Start, but do not tighten down 2 - M5x10 bolts as shown below into the Right Side Shelf Front #(20). Align the heads of the bolts with the keyhole slots in the Right Side Shelf #(21) and slide into place to align both parts. Install the additional 3 - M5x10 bolts as shown and tighten all 5 bolts.

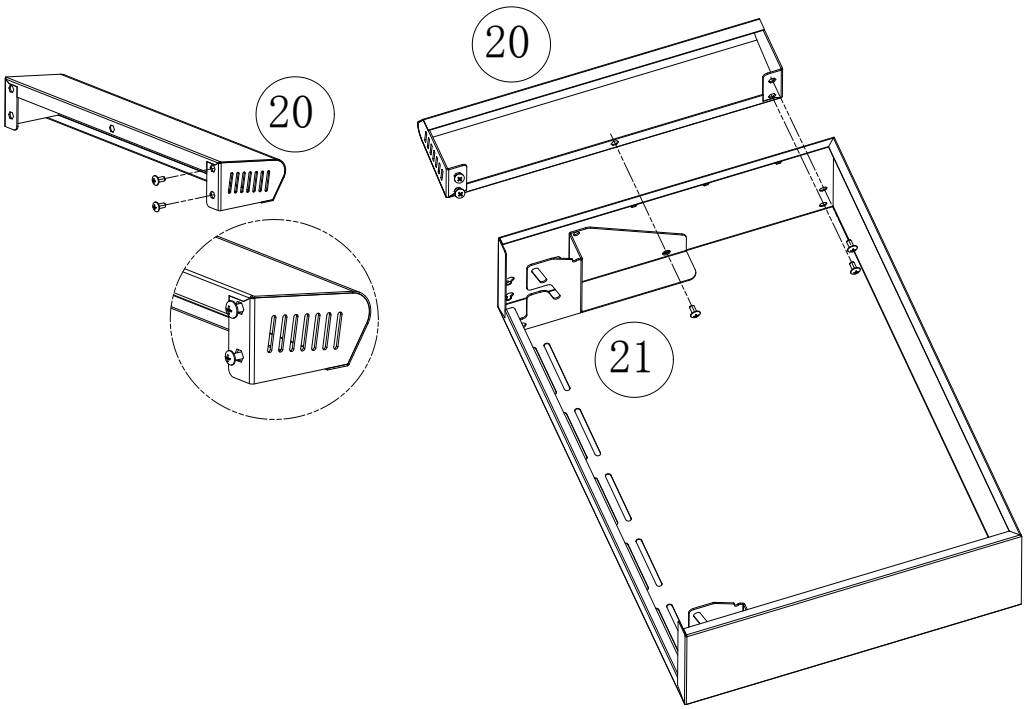

Attach the supplied Bottle Opener #(22) to the Right Side Shelf Assembly with 2 - M5x10. Install the 3 Tool Pegs and screw them into place.

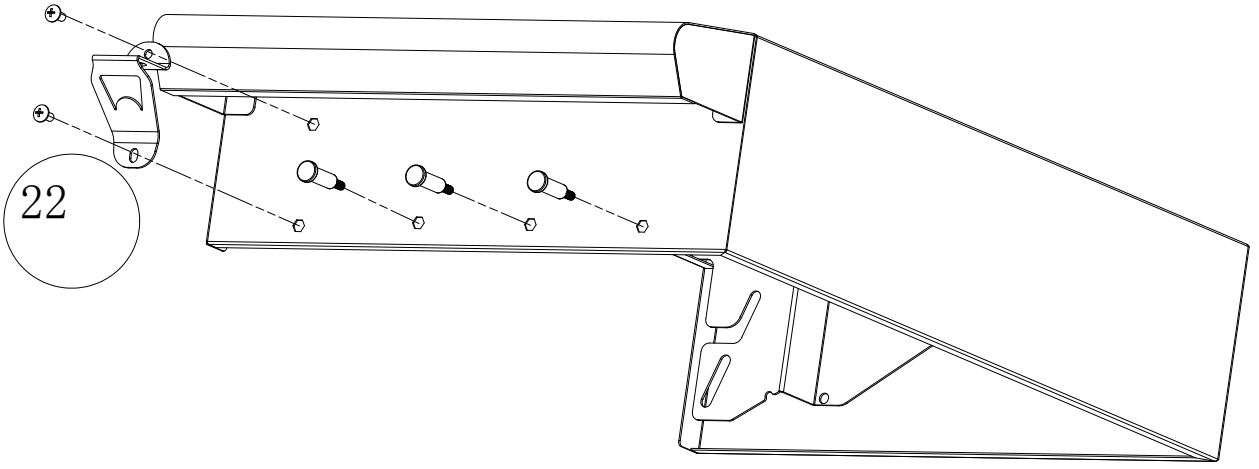

Install an M5x15 shoulder bolt at the top of each Shelf Bracket #(4, 5). After the installation use an additional M5x15 shoulder bolt to install the Side Shelf Assembly to the Shelf Bracket, front and rear as shown.

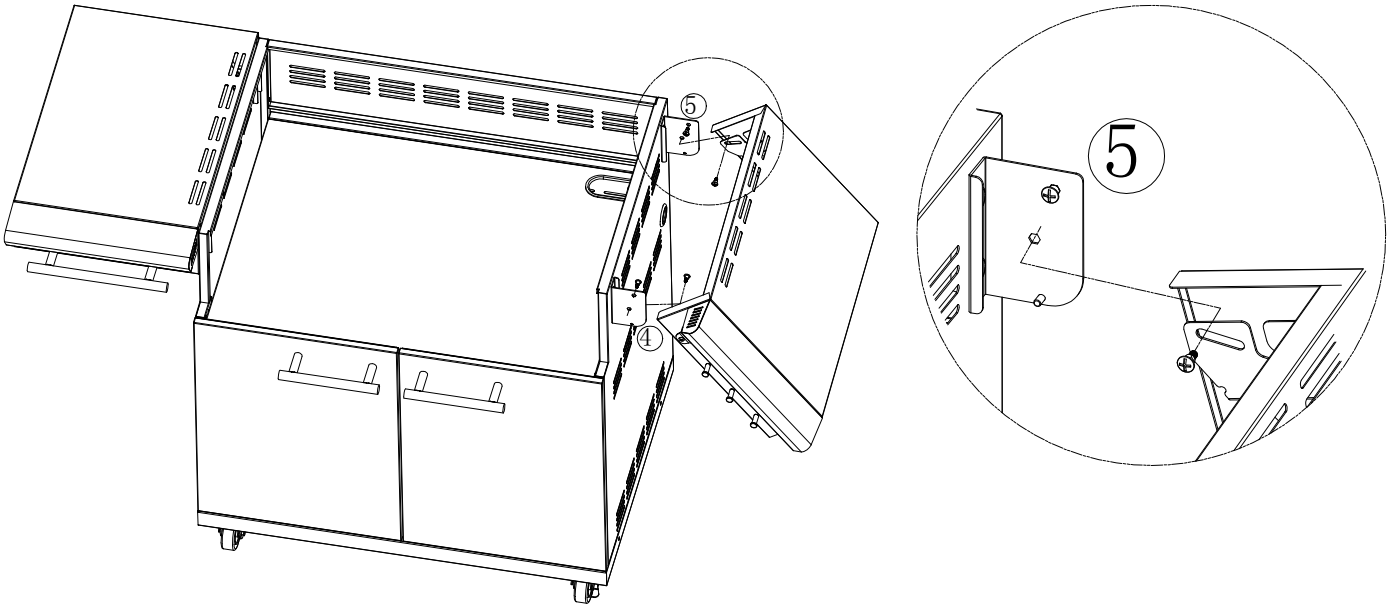

**BEFORE MOUNTING THE GRILL TO THE CART -
LOCK THE CASTERS TO PREVENT ACCIDENTAL MOVEMENT.**

WARNING: DO NOT ATTEMPT TO LIFT AND PLACE THE GRILL ALONE

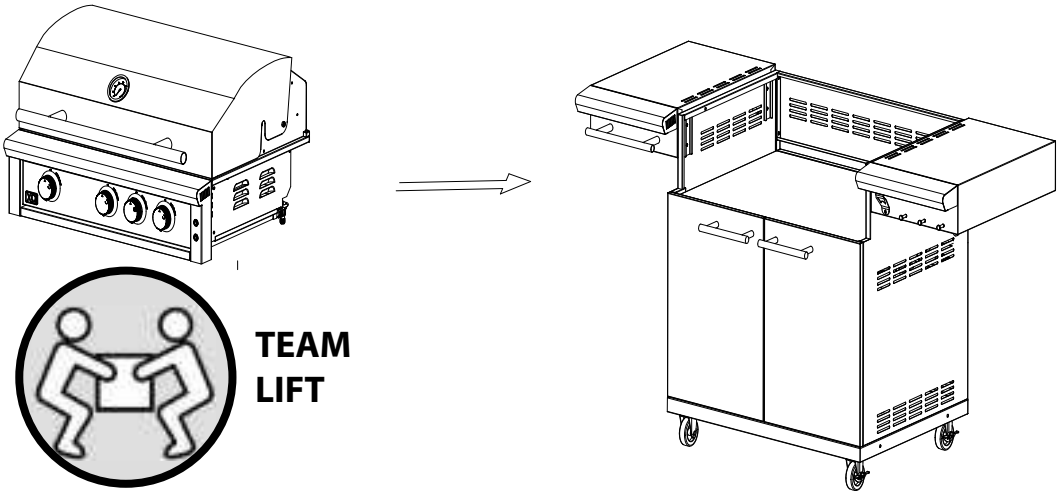

**OPEN THE GRILL AND REMOVE THE GRATES TO REDUCE ITS WEIGHT.
AFTER ENSURING THE CART HAS BEEN IMMOBILIZED, TOGETHER WITH OTHERS LIFT AND PLACE THE GRILL INTO THE ASSEMBLED CART. THE FLANGE SURROUNDING THE SIDES AND BACK OF THE GRILL WILL REST ON THE TOP EDGES OF THE SIDES. SLIDE THE GRILL IN APPROXIMATELY TWO THIRDS OF THE WAY.**

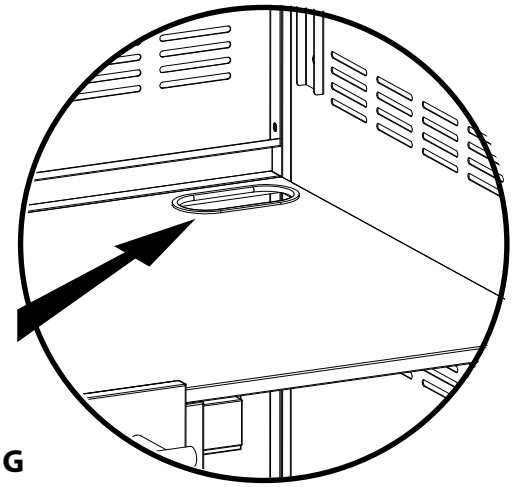

LEAVE THE OPENING IN THE RIGHT, REAR OF THE CENTER SHELF EXPOSED.

FEED YOUR GAS LINE AND THE ELECTRICAL FEED THROUGH THE OPENING AND CONNECT THESE TO THE GRILL BEFORE SLIDING THE APPLIANCE ALL THE WAY INTO THE CART.

IMPORTANT: READ THE SECTION ON CONNECTING THE GAS LINE IN YOUR GRILL MANUAL AND BE CERTAIN TO FOLLOW ALL THE SAFETY INSTRUCTIONS.

AFTER CONNECTING THE UTILITIES AND SLIDING THE GRILL IN SO THE GRILL FLANGE IS SUPPORTED ON BOTH THE SIDES AND BACK BY THE CART PANELS -

OPEN THE HOOD -
ON BOTH SIDES
OF THE GRILL FIREBOX
THERE IS A HOLE FOR AN
ATTACHMENT SCREW
(SEE DRAWING BELOW)

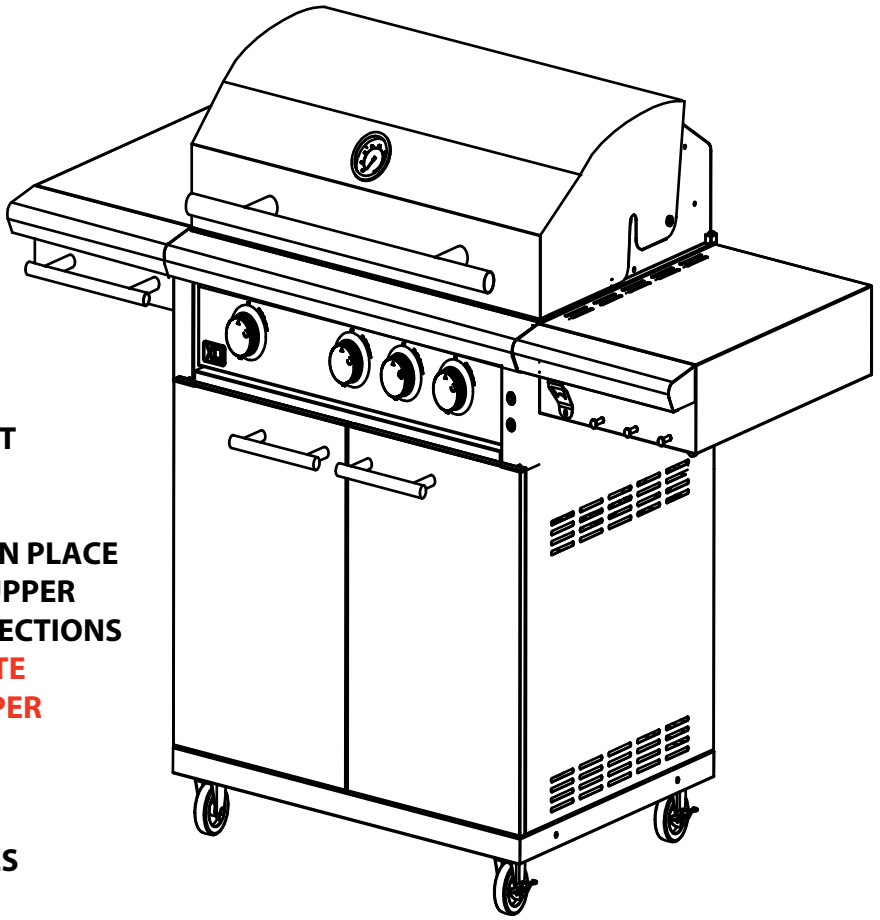

USING AN M5X10 BOLT
ON EACH SIDE
FASTEN THE GRILL TO THE CART

AFTER THE GRILL IS SECURED IN PLACE YOU CAN REMOVE THE REAR UPPER PANEL TO TIGHTEN THE CONNECTIONS IF NECESSARY - NEVER OPERATE THE GRILL WITH THE REAR UPPER PANEL REMOVED

REPLACE THE COOKING GRATES

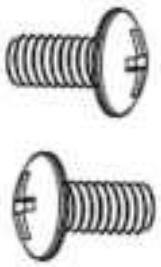

M5 x 10

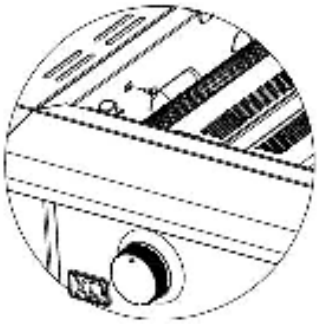

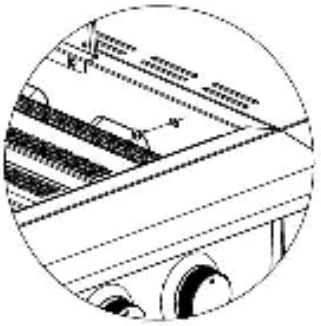

AFTER THIS STEP YOU ARE READY TO FINISH YOUR GRILL SET UP - CONSULT YOUR GRILL OPERATING MANUAL FOR ADDITIONAL INFORMATION.

IMPORTANT

**REFER TO YOUR GRILL OPERATING MANUAL
FOR INFORMATION REGARDING THE GAS
CONNECTION TO YOUR GRILL.
FAILURE TO FOLLOW ALL SAFETY GUIDELINES
MAY RESULT IN PROPERTY DAMAGE, INJURY OR DEATH.**

**XO APPLIANCE | 120 EAGLE ROCK AVE. SUITE 303 | EAST HANOVER, NJ 07936
P. 973.403.8900 WWW.XOAPPLIANCE.COM**