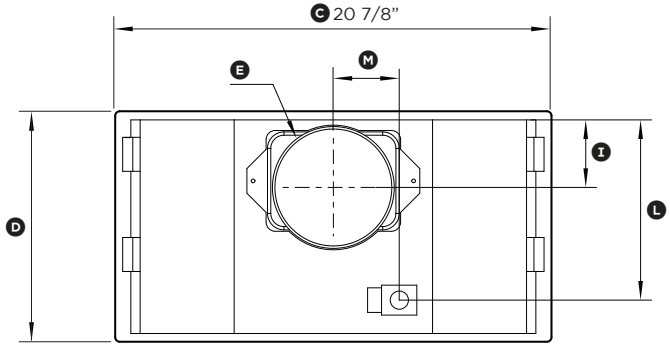

PLAN VIEW

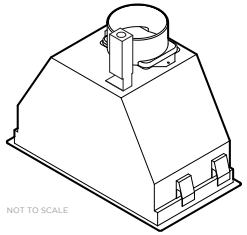

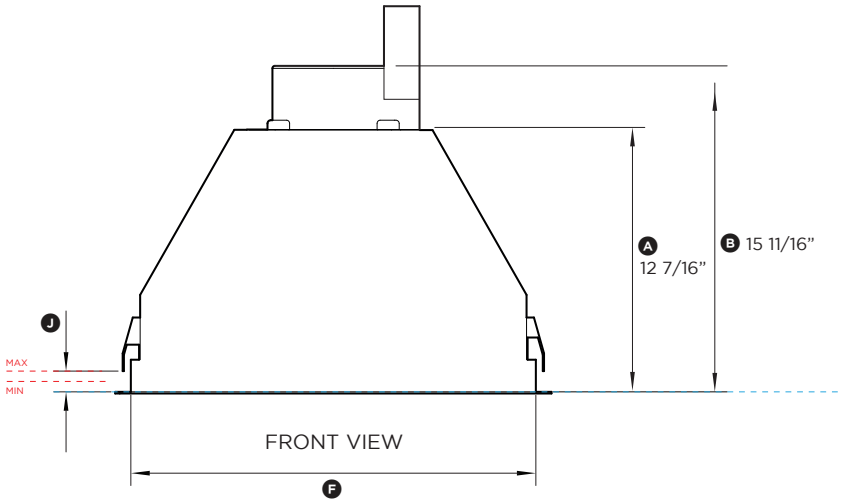

FRONT VIEW

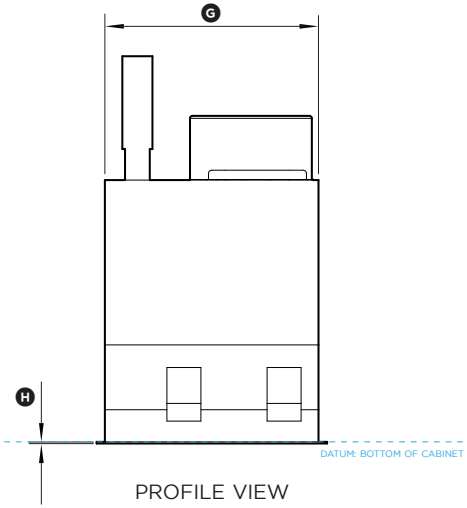

PROFILE VIEW

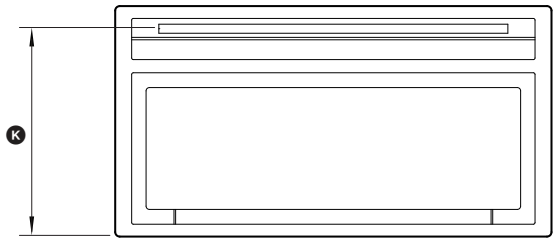

BOTTOM VIEW

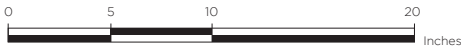

FISHER & PAYKEL

DATA SHEET

Insert Range Hood, 24"

Model nos:
HP24IDCHX4
(refer page 2 for metrical measurements)

Product Dimensions	**in**
(A) Overall height of range hood without ducting adapter	12 7/16"
(B) Overall height of range hood with ducting adapter	15 11/16"
(C) Overall width of range hood	20 7/8"
(D) Overall depth of range hood (excl. cabinetry front panel)	11"
(E) Diameter of ducting adaptor	6"
(F) Width of range hood chassis	19 3/8"
(G) Depth of range hood chassis	10 3/16"
(H) Thickness of flange	1/16"
(I) Distance from ducting outlet center to rear of chassis	3 1/4"
(J) Height adjustability of clip that secures cooker hood (cabinet base panel thickness)	min 9/16" max 1 9/16"
(K) Distance from rear to center of light	9 15/16"
(L) Distance from back of chassis to hard wiring box	8 9/16"
(M) Distance from center of product to hard wiring box	3 1/4"

Cavity Dimensions Standard Installation	**in**
Width of cutout	19 11/16"
Depth of cutout	10 1/4"

Minimum distance above cooktops	**in**
Minimum height from top of cooktop to base of product	24"

Minimum height may be greater if required by your cooktop. Refer to cooktop installation guide for details.

Note: We recommend the cabinet has a door or service panel that can be easily opened to access the power connection.

INDICATES CUTOUT ----------
INDICATES PRODUCT DATUM ----------
INDICATES CABINETRY CLEARANCES ----------

DATE: 23.08.2023 90003053A

IMPORTANT NOTE: Throughout this guide, dimensions may vary by ±2mm (1/16"). Please read the installation guide for detailed information on installing the product. For full installation instructions & specifications visit fisherpaykel.com

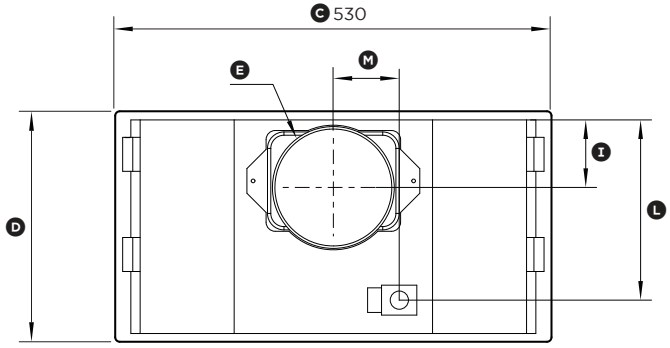

PLAN VIEW

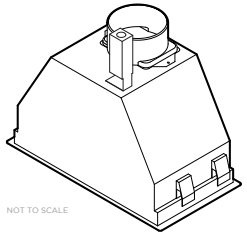

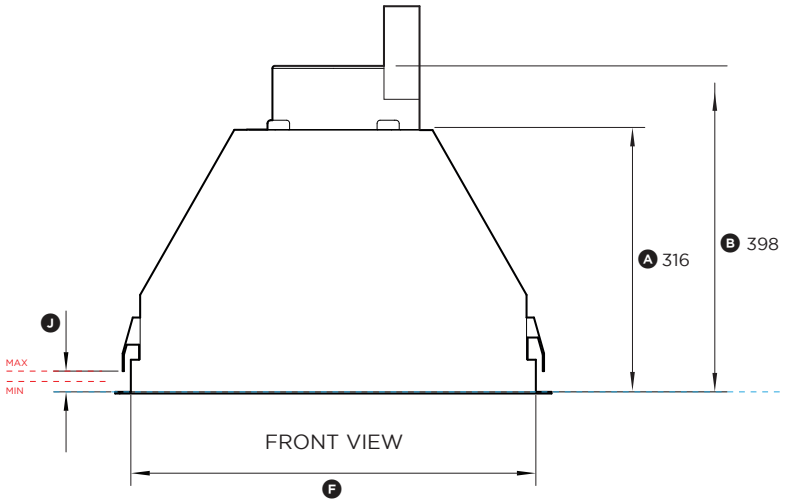

FRONT VIEW

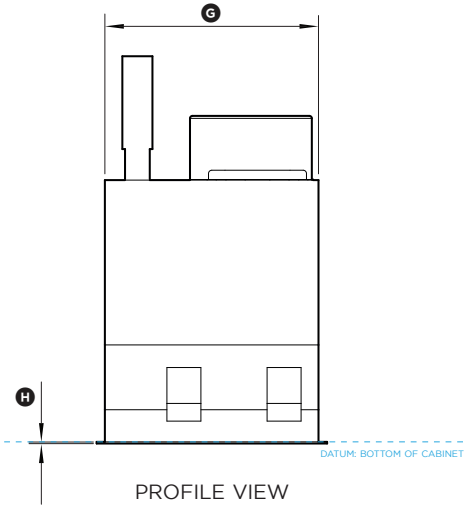

PROFILE VIEW

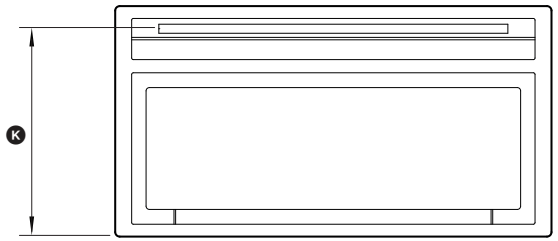

BOTTOM VIEW



FISHER & PAYKEL

DATA SHEET

Insert Range Hood, 24"

Model nos:

HP24IDCHX4

(refer page 1 for imperial measurements)

Product Dimensions	**mm**
(A) Overall height of range hood without ducting adapter	316
(B) Overall height of range hood with ducting adapter	398
(C) Overall width of range hood	530
(D) Overall depth of rangehood (excl. cabinetry front panel)	280
(E) Diameter of ducting adaptor	150
(F) Width of range hood chassis	492
(G) Depth of range hood chassis	258
(H) Thickness of flange	2
(I) Distance from ducting outlet center to rear of chassis	82
(J) Height adjustability of clip that secures cooker hood (cabinet base panel thickness)	min 15 max 40
(K) Distance from rear to center of light	253
(L) Distance from back of chassis to hard wiring box	217
(M) Distance from center of product to hard wiring box	82

Cavity Dimensions Standard Installation	**mm**
Width of cutout	500
Depth of cutout	260

Minimum distance above cooktops	**mm**
Minimum height from top of cooktop to base of product	610

Minimum height may be greater if required by your cooktop. Refer to cooktop installation guide for details.

Note: We recommend the cabinet has a door or service panel that can be easily opened to access the power connection.

INDICATES CUTOUT ----------

INDICATES PRODUCT DATUM ----------

INDICATES CABINETRY CLEARANCES ----------

DATE: 23.08.2023 90003053A

IMPORTANT NOTE: Throughout this guide, dimensions may vary by ±2mm (1/16"). Please read the installation guide for detailed information on installing the product. For full installation instructions & specifications visit fisherpaykel.com