48" Series 7 Professional 8 Burner Gas Range, Natural Gas

Series 7 | Professional

Stainless Steel | Natural gas



Size plus power. Eight burners deliver powerful 23,500 BTU heat, with two gas ovens for a combined 7.7 cu ft capacity.

- Top burner heat of 23,500 BTU, for seriously fast boiling
- Expansive 7.7 cu ft total oven capacity across two oven cavities
- Non-tip full-extension shelves in main cavitiy for safe removal of hot dishes
- Made from quality materials and real stainless steel

DIMENSIONS

Height	35 3/4 - 36 3/4 "
Width	47 7/8 "
Depth	29 1/8 "

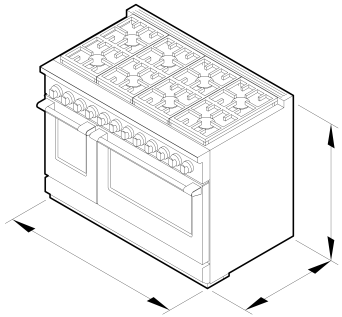

FEATURES & BENEFITS

Generous Capacity

Featuring a generous total capacity of 7.7 cu ft, with enough room to fit a 32 lb turkey, or to cook several dishes at once.

Cooktop Power

Sealed Dual Flow Burners™ deliver cooktop power up to 23,500 BTU for seriously fast boiling right down to a precise 140□F full surface simmer with the gentlest of flames.

Cooking Flexibility

The cooktop is designed for easy access to any burner with grates you can smoothly slide pots across. The oven is large enough to hold full size baking sheets.

Easy To Clean

Cleaning up spills is effortless with the continuous, porcelain basepan. Your cooktop simply needs a quick wipe to keep it looking good as new.

Design Quality

This range has craftsmanship in every detail, with real stainless steel, cast-iron grates, and titanium coated dials. Each cavity features incandescent lights and full extension telescopic racks. From the robust legs to the powerful legs to the powerful cooktop, the Range is built to last.

Total Control

Precise control across high and low settings is delivered through the halo-illuminated cooktop dials.

SPECIFICATIONS

Burner ratings

Maximum burner power	23500 BTU
Power back centre	18500BTU
Power back centre (2)	18500BTU
Power back left	18500BTU
Power back right	18500BTU
Power front centre	18500BTU
Power front centre (2)	18500BTU
Power front left	23500BTU
Power front right	23500BTU
Total cooktop power	158000 BTU

Capacity

Shelf positions	5
Total capacity (main oven)	5.3 cu ft

Total capacity second oven	2.4 cu ft
Usable capacity (main oven)	3.9 cu ft

Cleaning

Easy clean porcelain basepan	•

Controls

Electric circuit	3
Metal illuminated dials	•

Gas Requirements

Fitting and pipe	▯ NPT, min. ▯" ▯ flex line
Supply Pressure (natural gas)	6" to 9" W.C

Main oven features

Broil pan	•
Electronic oven control	•
Full extension telescopic racks	•
Internal light	•

Main oven functions

Bake	•
Broil	•
Convection bake	•
Number of oven functions	4
Slow cook	•

Oven features

Auto re-ignition system	•
Electronic oven control	•
Full extension telescopic sliding shelves	•
Titanium coated, illuminated metal dials	•

Oven functions

Bake	•
Broil	•
Convection bake	•
Slow cook	•

Power Requirements

Service	15 A
Supply frequency	60 Hz
Supply voltage	120 V

Product Dimensions

Depth	29 1/8 "
Depth (excluding handles)	29 1/8 "
Height	35 3/4 - 36 3/4 "
Width	47 7/8 "

Rangetop features

Sealed range top	•
Vent trim included	•

Recommended Back Guards Ventilation

Combustible situation	BGRV3-3048H
Non combustible situation	BGRV2-3048 / BGRV2-1248
Recommended hood	HCB48-12_N (48" Professional Range Hood, Dual Blower)

Safety

ADA compliant	•
Full extension telescopic sliding shelves	•

Secondary oven features

3/4 Extension racks	2
Electronic oven control	•
Internal light	•

Secondary oven functions

Bake	•
Convection bake	•
Number of secondary oven functions	4
Proof	•
Slow cook	•

SKU	86047

The product dimensions and specifications in this page apply to the specific product and model. Under our policy of continuous improvement, these dimensions and specifications may change at any time. You should therefore check with Fisher & Paykel's Customer Care Centre to ensure this page correctly describes the model currently available. © Fisher & Paykel Appliances Ltd 2020

Other product downloads available at fisherpaykel.com

- Installation Guide (English)
- Installation Guide (Canadian French)
- California Warning Proposition 65 (English, Spanish, Canadian French, Chinese)
- Revit
- Rhino
- Right To Repair Declaration (English, Canadian French)
- SketchUp
- User Guide (English)
- User Guide (Canadian French)

Where applicable:

All appliances use energy, and energy usage typically generates carbon emissions. **Fisher & Paykel Appliances' In-use Energy Carbon Emissions Estimate** indicates carbon emissions from a product's in-use energy. This is calculated either annually or per cycle, using the product's market-specific energy label energy consumption data multiplied by the carbon emissions factor for energy in your country or region.

Our In-use Energy Carbon Emissions Estimate is designed to assist customers in making informed purchasing decisions when comparing different Fisher & Paykel products. For example, a heat pump dryer typically has a lower In-use Energy Carbon Emissions Estimate than a vented dryer.



A PEACE OF MIND SALE
24 Hours 7 Days a Week Customer Support

T 1.888.936.7872 Wwww.fisherpaykel.com