Installation Instructions

Built-in Trim Kit

Models # FMTK3027AS FMTK3027AD FMTK3027AB FMTK3027AW FMTK2727AS FMTK2727AB FMTK2727AW

BEFORE YOU BEGIN

Read these instructions completely and carefully.

- **IMPORTANT** – Save these instructions for local inspector's use.
- **IMPORTANT** – Observe all governing codes and coordinates.
- **Note to Installer** – Be sure to leave these instructions with the Consumer.
- **Note to Consumer** – Keep these instructions for future reference.
- **Skill level** - Installation of this appliance requires basic mechanical and electrical skills

- Proper installation is the responsibility of the installer.
- Product failure due to improper installation is not covered under the Warranty.
- Unplug the microwave oven before attempting installation of this kit.
- Because the kit includes metal parts, caution should be used in handling and installation to avoid the possibility of injury.
- Do not remove permanently affixed labels, warnings, or plates from the product. This may void the warranty.

FOR YOUR SAFETY:

WARNING – Before beginning the installation, switch power off at service panel and lock the service disconnecting means to prevent power from being switched on accidentally. When the service disconnecting means cannot be locked, securely fasten a prominent warning device, such as a tag, to the service panel.

IMPORTANT - PLEASE READ AND FOLLOW

THIS BUILT-IN KIT IS DESIGNED FOR USE ONLY WITH FRIGIDAIRE MICROWAVE OVENS SPECIFYING BUILT-IN KIT

FMTK3027AS/D/B/W OR
FMTK2727AS/B/W ON THE RATING LABEL ON THE LEFT SIDE WALL OF THE MICROWAVE OVEN CAVITY.

IMPORTANT:

Before installing the exhaust duct, confirm the floor is level. The level bubble should be equal distance from level guide lines.

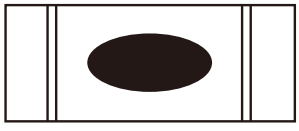

QUESTIONS?

For customers in the United States call:1-1800-944-9044

For customers in Canada call: 1-800-265-8352 (English)

1-800-668-4606 ext.8199 (French)

Visit our Website at: **www.frigidaire.com**

READ CAREFULLY.

KEEP THESE INSTRUCTIONS.

PN: A06823523
April 2024

16170000A84905

Installation Instructions

PARTS INCLUDED IN THE KIT

1. Front Frame Assembly- QTY 1
2. Exhaust Duct - QTY 1
   Bottom Mounting Rail – QTY 2
3. Screw A - QTY 11 (3.9X8.0 mm)
4. Screw B - QTY 4 (4.0X20 mm)

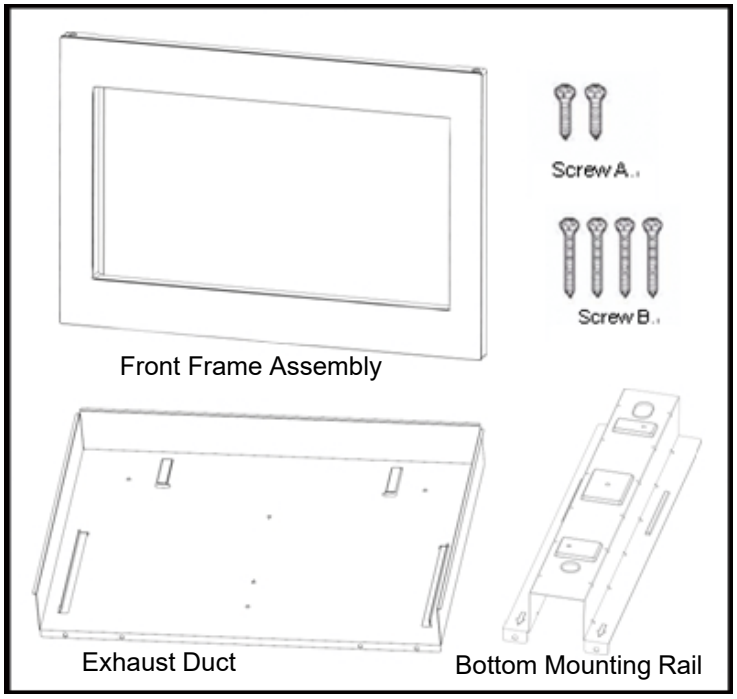

Illustration 1

CHOOSING A LOCATION FOR YOUR MICROWAVE OVEN IF BUILT-IN

Built-In Trim Kit allows for the installation of microwaves listed below to be built into a cabinet or wall by itself or over an electric wall oven*.

Model Number	Color	Description
FMBS2227AB/FMBS227BB	Black	Microwave
FMTK3027AS	SS	30'' trim kit
FMTK3027AD	Black SS	30'' trim kit
FMTK3027AB	Black	30'' trim kit
FMTK3027AW	White	30'' trim kit
FMTK2727AS	SS	27'' trim kit
FMTK2727AB	Black	27'' trim kit
FMTK2727AW	White	27'' trim kit

See Illustration 2 for proper location and when building above a wall oven. Carefully follow both the wall oven installation instructions and Electrolux's Built-in Kit instructions. If building over a wall oven, be sure the clearance between the wall oven and the microwave oven is a minimum of 3 inches.

*NOTE: Trim Kit and microwave can only be built-in over an electric self-clean or non-self-cleaning single cavity wall oven.

Trim Kit Overall Dimensions		
	27"	30"
Height	18 1/8 (460 mm)	18 1/8 (460 mm)
Width	26 15/16 (684 mm)	29 15/16 (759 mm)
Depth	1 9/16 (40 mm)	1 9/16 (40 mm)

CABINET OR WALL CUTOUT

Cutout Dimensions

Height (A)	
Minimum	17" (432 mm)
Maximum	$17_{1/4}$" (438 mm)
Width (B)	
Minimum	24 3/4" (629 mm)
Maximum	25" (635 mm)
Depth (C)	
Minimum	20" (508 mm)

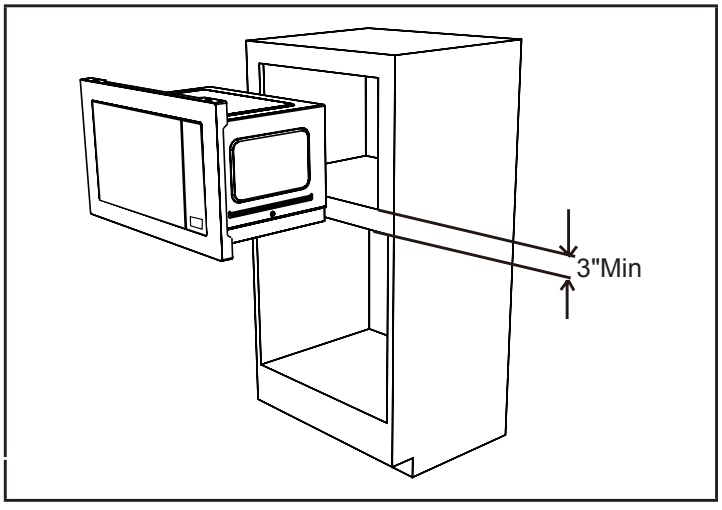

Illustration 2

Installation Instructions

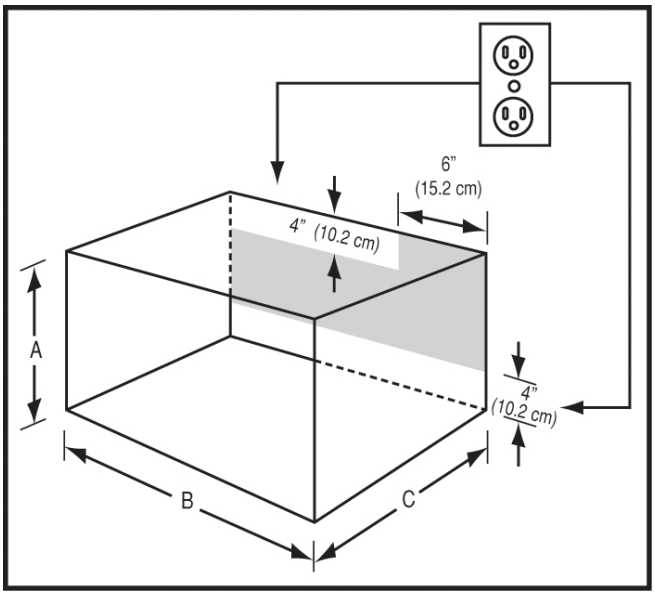

Illustration 3

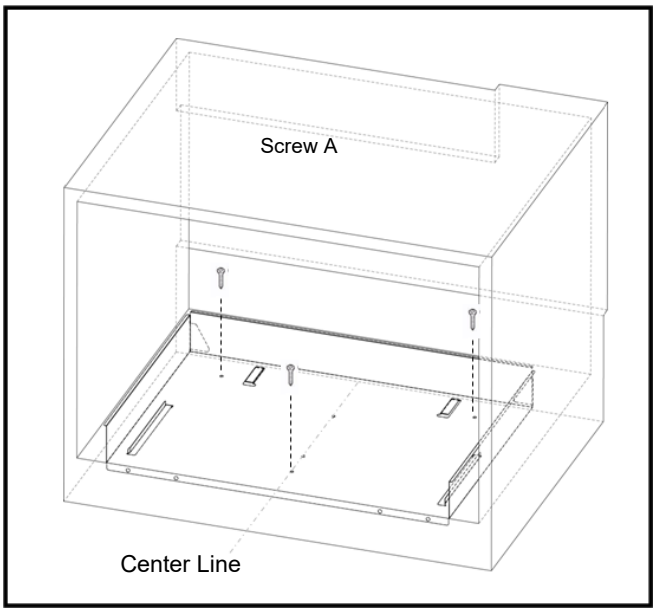

Illustration 4

ELECTRICAL OUTLET LOCATION

Outlet should NOT be in the shaded area as indicated on Illustration 3

NOTE 1:

The floor of the opening should be constructed of plywood strong enough to support the weight of the oven and floor load (approximately 100 pounds). The floor should be level for proper operation of the oven. Be sure to check the local building code as it may require that the opening be enclosed with side, ceiling and rear partition. The proper functioning of the oven does not require the enclosure.

EXHAUST DUCT ASSEMBLY

1. Draw a Central Line on floor. Place the Exhaust Duct in the opening, When the Exhaust Duct Assembly is in the opening correctly, the Center Line is in the middle of the Exhaust Duct Assembly. See Illustration 4.
2. Secure the Exhaust Duct Assembly with the three screws A.

   IMPORTANT: Secure screws in outer hole.
   3 screws are needed for exhaust duct assembly

IMPORTANT:

Before installing the exhaust duct, confirm the floor is level. The level bubble should be equal distance from level guide lines.

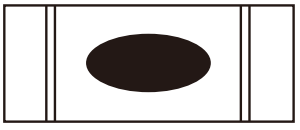

Installation Instructions

Bottom Mounting Rail

1. Turn microwave upside down so you are looking at oven bottom. Secure the bottom Mounting Rail on oven with four screws A. See Illustration 5 below.

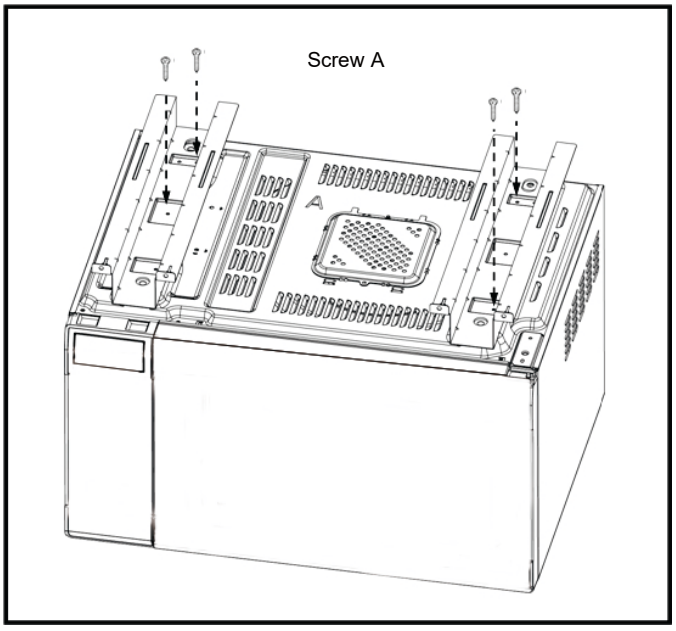

Illustration 5

OVEN INSTALLATION

1. Place the oven adjacent to the wall or cabinet opening. Plug the power cord into the electrical outlet.

   IMPORTANT: Protect cabinet when placing on counter top.

2. Carefully guide the assembled oven into the prepared opening. Slide the oven on the Exhaust Duct Assembly. See Illustration 6.
3. Secure the Exhaust Duct Assembly with the four screws A.

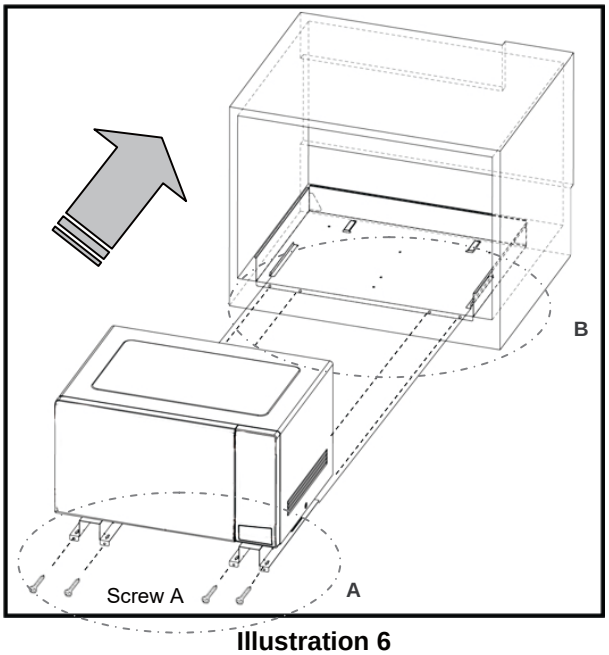

Illustration 6

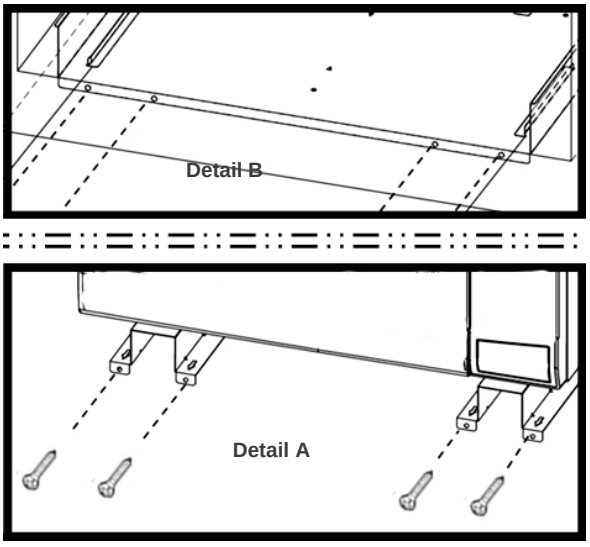

FRAME INSTALLATION

1. Position the FRAME ASSEMBLY to be square with the oven. Carefully place the FRAME ASSEMBLY on the oven. See Illustration 7.
2. Check that it is level and then secure with two Screws B. Secure the bottom portion of the FRAME ASSEMBLY with the two remaining Screws B. See Illustration 8.

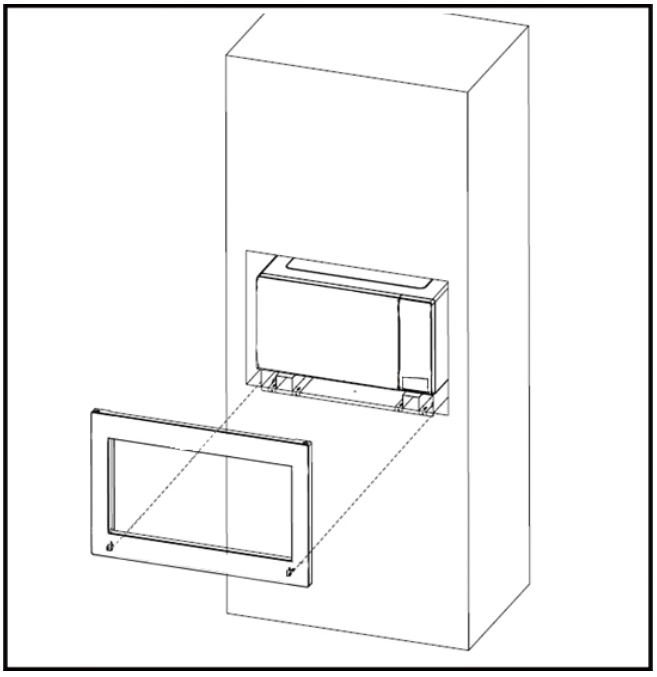

Illustration 7

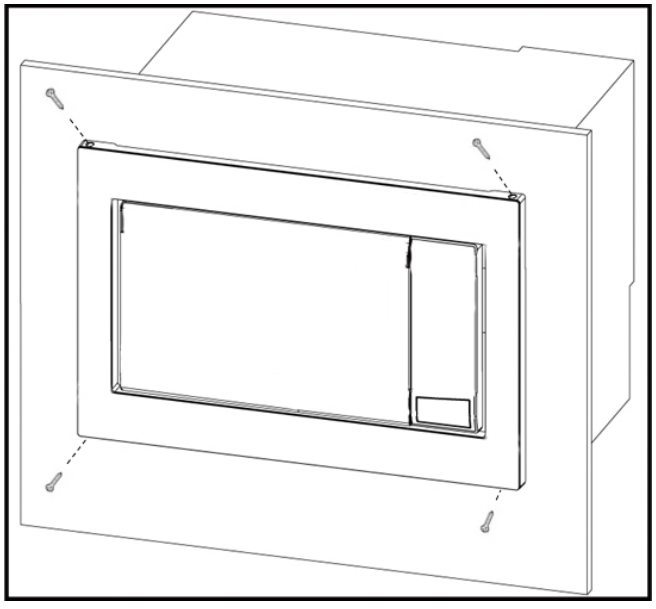

Illustration 8