FRIGIDAIRE

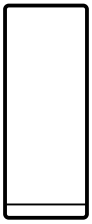

Freezer

use & care

Introduction....2
Important Safety Information....3
Features....6
Installation....7
Door Removal/Reversal....8
Controls And Settings....12
Storage Features....14
Care And Cleaning....15
Troubleshooting....17
Limited Warranty....18

A28724801 (March 2024)

Welcome to our **family**

Thank you for bringing Frigidaire into your home! We see your purchase as the beginning of a long relationship together.

This manual is your resource for the use and care of your product. Please read it before using your appliance. Keep it handy for quick reference. If something doesn't seem right, the troubleshooting section will help you with common issues.

FAQs, helpful tips and videos, cleaning products, and kitchen and home accessories are available at Frigidaire.com.

We are here for you! Visit our website, chat with an agent, or call us if you need help. We may be able to help you avoid a service visit. If you do need service, we can get that started for you.

Let's make it official! Be sure to register your product.

Keep your product info here so it's easy to find.

Model Number _____

Serial Number _____

Purchase Date _____

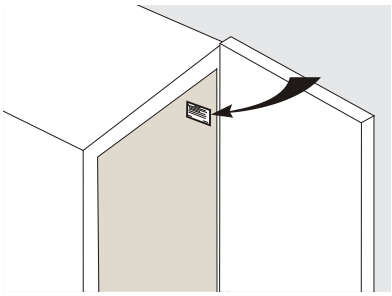

Serial Plate Location

Installation Checklist

Doors

- ❒ Door seals completely to cabinet on all sides
- ❒ Door is level from side to side across the top

Leveling

- ❒ Appliance is level, side-to-side and tilted ¼″ (6 mm) front-to-back
- ❒ Cabinet is setting solid on all corners
- ❒ Anti-tip bracket set in front (both sides)

Electrical Power

- ❒ House power turned on
- ❒ Appliance plugged in

Final Checks

- ❒ Shipping material removed
- ❒ Registration card sent in

WARNING

Please read all instructions before using this appliance.

Safety Definitions

This is the safety alert symbol. It is used to alert of potential personal injury hazards. Obey all safety messages that follow this symbol to avoid possible injury or death.

DANGER

DANGER indicates an imminently hazardous situation which, if not avoided, will result in death or serious injury.

WARNING

WARNING indicates a potentially hazardous situation which, if not avoided, could result in death or serious injury.

CAUTION

CAUTION indicates a potentially hazardous situation which, if not avoided, may result in minor or moderate injury.

IMPORTANT

IMPORTANT indicates installation, operation or maintenance information which is important but not hazard-related.

DANGER

DANGER Risk of fire or explosion. Flammable refrigerant used. Do not use mechanical devices to defrost refrigerator. Do not puncture refrigerant tubing.

DANGER Risk of fire or explosion. Flammable refrigerant used. To be repaired only by trained service personnel. Use only manufacturer-authorized service parts. Any repair equipment used must be designed for flammable refrigerants. Follow all manufacturer repair instructions. Do not puncture refrigerant tubing.

CAUTION

CAUTION Risk of fire or explosion. Dispose of refrigerator properly in accordance with the applicable federal or local regulations. Flammable refrigerant used.

CAUTION Risk of fire or explosion due to puncture of refrigerant tubing. Follow handling instructions carefully. Flammable refrigerant used.

WARNING

CALIFORNIA RESIDENTS ONLY
Cancer and Reproductive Harm
www.P65Warnings.ca.gov

Safety Instructions

- DO NOT store or use gasoline, or other flammable liquid within or in the vicinity of this appliance. Read Product Label for warnings regarding flammability and other hazards.
- DO NOT store explosive substances such as aerosol cans with a flammable propellant in this appliance.
- DO NOT operate the refrigerator in the presence of explosive fumes.
- Avoid contact with any moving parts of automatic ice maker.
- Remove all staples from the carton. Staples can cause severe cuts, and also destroy finishes if they come in contact with other appliances or furniture.

WARNING

Do not use electrical appliances inside the food storage compartments of the appliance unless they are of the type recommended by the manufacturer.

Child Safety

This appliance is not intended for use by persons (including children) with reduced physical, sensory or mental capabilities, or lack of experience and knowledge, unless they have been given supervision or instruction concerning use of the appliance by a person responsible for their safety.

Destroy or recycle the carton, plastic bags, and any exterior wrapping material immediately after the refrigerator is unpacked. Children should **NEVER** use these items to play. Cartons covered with rugs, bedspreads, plastic sheets or stretch wrap may become airtight chambers, and can quickly cause suffocation.

Proper Disposal of your Appliance

Risk of child entrapment

Child entrapment and suffocation are not problems of the past. Junked or abandoned appliances are still dangerous – even if they will sit for “just a few days”. If you are getting rid of your old appliance, please follow the instructions below to help prevent accidents.

We strongly encourage responsible appliance recycling/disposal methods. Check with your utility company or visit energystar.gov/recycle for more information on recycling your old appliance.

Before you throw away your old appliance:

- Remove door.
- Leave shelves in place so children may not easily climb inside.
- Have refrigerant removed by a qualified service technician.

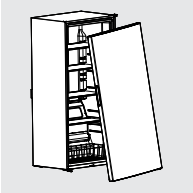

IMPORTANT

CFC/HCFC Disposal

Your old appliance may have a cooling system that used CFCs or HCFCs (chlorofluorocarbons or hydrochlorofluorocarbons). CFCs and HCFCs are believed to harm stratospheric ozone if released to the atmosphere. Other refrigerants may also cause harm to the environment if released to the atmosphere.

If you are throwing away your old appliance, make sure the refrigerant is removed for proper disposal by a qualified technician. If you intentionally release refrigerant, you may be subject to fines and imprisonment under provisions of environmental legislation.

WARNING

These guidelines must be followed to ensure that safety mechanisms in this appliance will operate properly.

Electrical information

- Plug the appliance into its own dedicated 115 Volt, 60 Hz., 15 Amp, AC only electrical outlet. The power cord of the appliance is equipped with a 3-prong grounding plug for your protection against electrical shock hazards. Plug it directly into a properly grounded 3-prong receptacle. Install the receptacle in accordance with local codes and ordinances. Consult a qualified electrician. Avoid connecting the appliance to a Ground Fault Interrupter (GFI) circuit. Do not use an extension cord or adapter plug.
- If the power cord is damaged, an authorized service technician should replace it to prevent any risk.
- Never unplug the appliance by pulling on the power cord. Always grip the plug firmly, and pull straight out from the receptacle to prevent damaging the power cord.
- Unplug the appliance before cleaning and before replacing the AC LED light bulb to avoid electrical shock. Use only a 5-watt or less AC LED light bulb.
- Performance may be affected if the voltage varies by 10% or more. Operating the appliance with insufficient power can damage the compressor. Such damage is not covered under your warranty.
- Do not plug the unit into an electrical outlet controlled by a wall switch or pull cord to prevent the appliance from being turned off accidentally.

IMPORTANT

Turning the appliance controls to **off** will disable your appliance's cooling system, but does not disconnect the power to the light bulb and other electrical components. To turn off power to your appliance you must unplug the power cord from the electrical outlet.

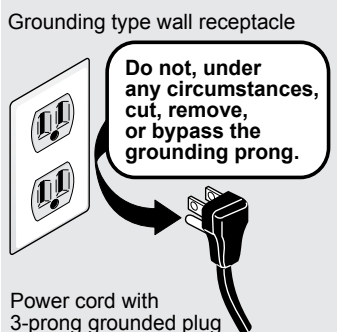

FEATURES

*Features may vary according to model

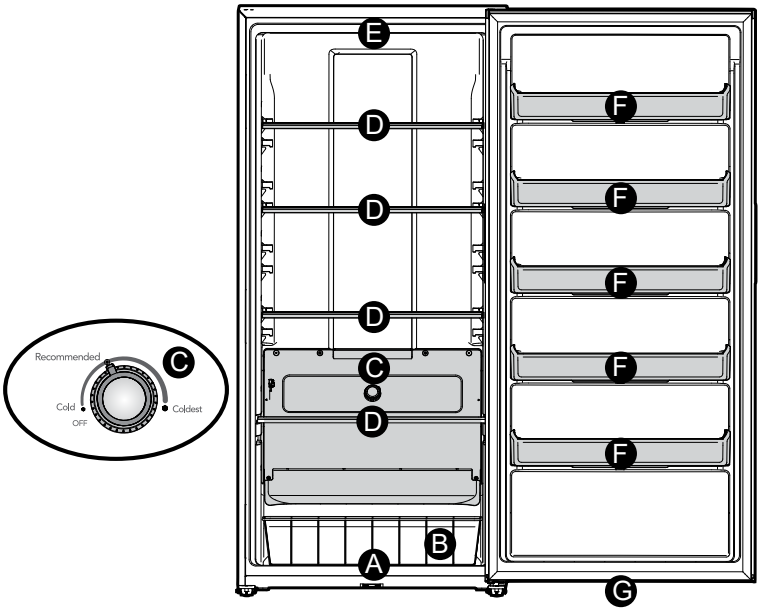

A	Magnetic Door Switch
***B**	Freezer Basket
C	Appliance Control (Internal)
***D**	Freezer Shelf

E	5-Watt AC LED Light Bulb
***F**	Fixed Door Bins
G	Magnet (Door Open Sensor)

IMPORTANT

Cleaning your Appliance

Remove tape and glue residue from surfaces before turning on the appliance. Rub a small amount of liquid dish soap over the adhesive with your fingers. Rinse with warm water and dry with a soft cloth.

Do not use sharp instruments, rubbing alcohol, flammable fluids, or abrasive cleaners to remove tape or glue. These products can damage the surface of your appliance.

After you remove all of the package materials, clean the inside of your appliance before using it. See the **CARE AND CLEANING** section in this manual.

See important information about cleaning glass shelves and covers in the **STORAGE FEATURES** section of this manual.

This Use & Care Manual provides general operating instructions for your model. Use the appliance only as instructed in this Use & Care Manual. Before starting the appliance, follow these important first steps.

Location

WARNING

This appliance is intended for use in residential household and similar interior applications such as:

- a kitchen/kitchenette
- a pantry room
- a basement
- an enclosed garage
- other interior residential-type environments

- Choose a place that is near a grounded electrical outlet. Do Not use an extension cord or an adapter plug.
- If possible, place the appliance out of direct sunlight and away from the range, dishwasher or other heat sources.
- Install the appliance on a floor that is level and strong enough to support a fully loaded appliance.

WARNING

DO NOT install the appliance where the temperature will drop below 0°F (-18°C) or rise above 110°F (43°C). The compressor will not be able to maintain proper temperatures inside the unit.

CAUTION

Do not block the lower front of your appliance. Sufficient air circulation is essential to operate your appliance properly.

WARNING

Installation

Allow the following clearances for ease of installation, proper air circulation, and plumbing and electrical connections:

Sides & Top	⅜ in. (10 mm)
Back	1 in. (25 mm)

NOTE

If your appliance is placed with the door hinge side against a wall, you may have to allow additional space for the handle so the door can be opened wider.

Guidelines for final positioning of your appliance:

- All 4 corners of the cabinet must rest firmly on the floor.
- The cabinet should be level at the front and rear.
- The door should be level.

Setting the anti-tip bracket:

Models are equipped with an anti-tip bracket. The anti-tip brackets are located on the lower front corners of the cabinet. Lower the anti-tip on each side clockwise until they contact the floor. Do not raise the cabinet.

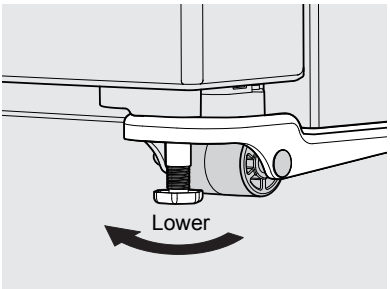

Anti-tip Bracket

WARNING

The anti-tip device must be installed according to the instructions in your Use & Care Manual. Failure to do so may result in injury.

DOOR REMOVAL/REVERSAL

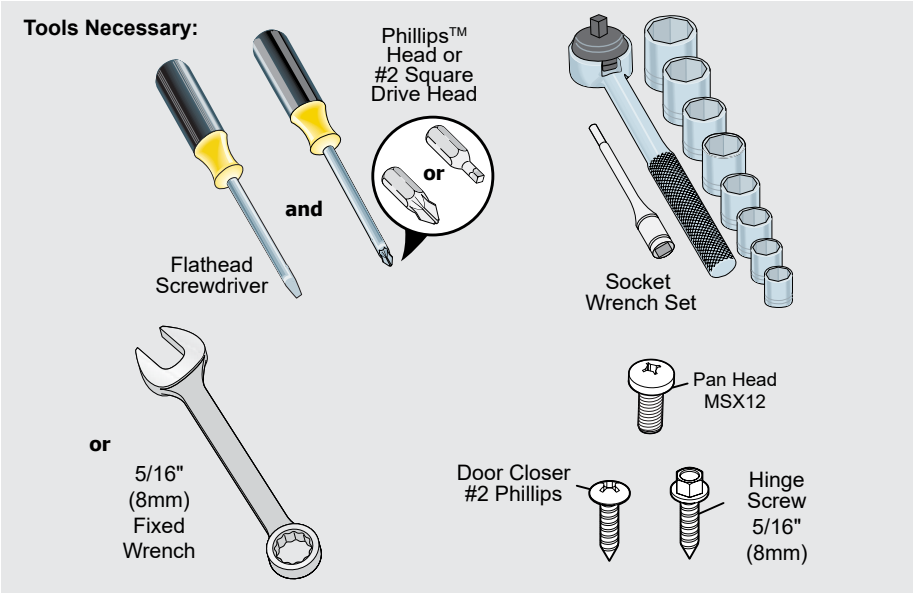

NOTE

The direction in which your appliance doors open (door swing) can be reversed, from left to right or right to left, by moving the door hinges from one side to the other. A qualified person should reverse the door swing.

IMPORTANT

Before you begin, turn the appliance temperature control to **off** and remove the electrical power cord from the wall outlet. Remove any food from door shelves.

1. Unplug your freezer.
2. Remove the 3 screws from the top hinge using a Phillips™ screwdriver or 5/16″ wrench. Set the hinge and screws aside (see Figure 1).

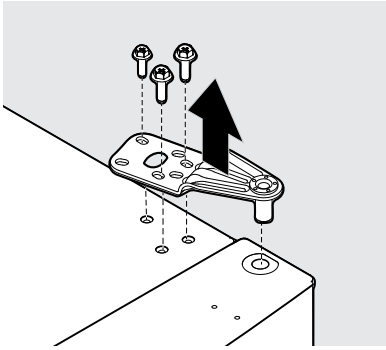

Figure 1

3. Gently pry the hinge bearing out from the top of the freezer door with a flathead screwdriver (See Figure 2A).
4. Install the hinge bearing on the opposite side of the door (see Figure 2B). Remove the door from the unit by lifting the door up.

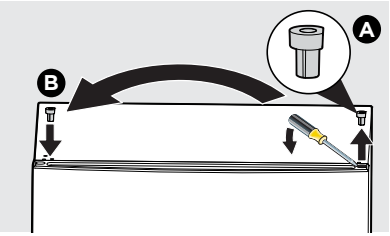

Figure 2

NOTE

Place the door on a padded surface to prevent damage.

5. Flip the door over to access the bottom. Using a Phillips™ screwdriver remove the screws from the hinge bearing and the door closer (see Figure 3A).
6. Using a flat head screwdriver, gently pry the closer/bearing assembly out of the door (see Figure 3B).
7. Separate the door closer and hinge bearing (see Figure 3C).
8. Flip the door closer over 180º and reinstall the closer onto the hinge bearing (see Figure 3D).
9. Using a Phillips™ screwdriver, attach the door closer/bearing assembly to the opposite side of the door (see Figure 3E).

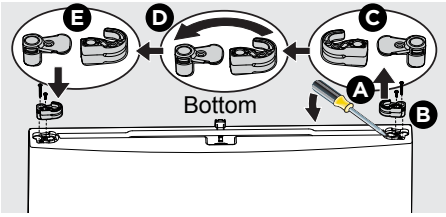

Figure 3

10. Using a Phillips™ screwdriver, remove the screw from the door stop (see Figure 4A).
11. Using a flat head screwdriver, gently pry the door stop off the bottom hinge pin (see Figure 4B).
12. Using a ratchet with a 12 mm socket, remove the bottom hinge pin (see Figure 4C).

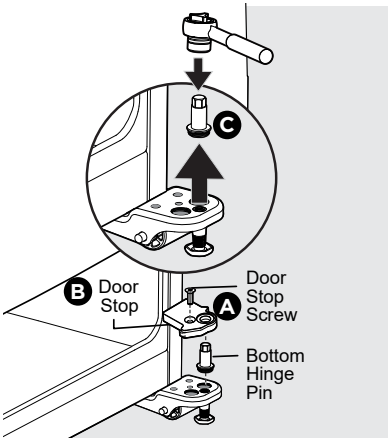

Figure 4

13. Reinstall the hinge pin into the outer hole and tighten with a ratchet and a 12 mm socket (see Figure 5A).
14. Flip door stop over 180° (see Figure 6B) and reinstall onto the opposite hinge over the hinge pin (see Figure 5C).

    With the assistance of another person, tilt the appliance back, to have access to the bottom hinge. Loosen the hinge screws slightly. flip the door stopper, and place it on top of the bottom hinge, making adjustments until the stopper is flush against the unit. Tighten all screws. (See Figure 6)
15. Secure the door stop with a screw (see Figure 5D).

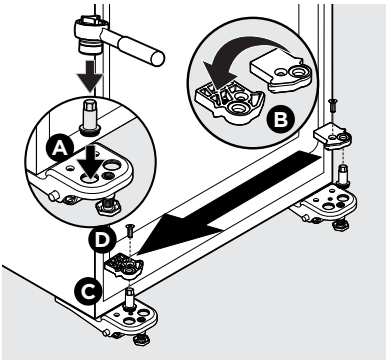

Figure 5

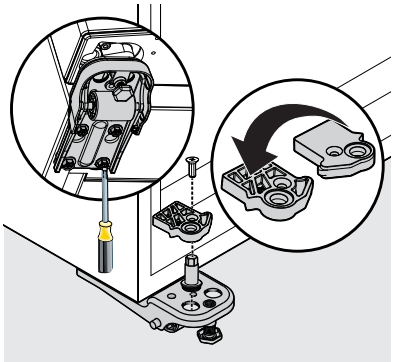

Figure 6

16. Slide the door onto the bottom hinge pin at 90° to the freezer cabinet and close the door (see Figure 7).

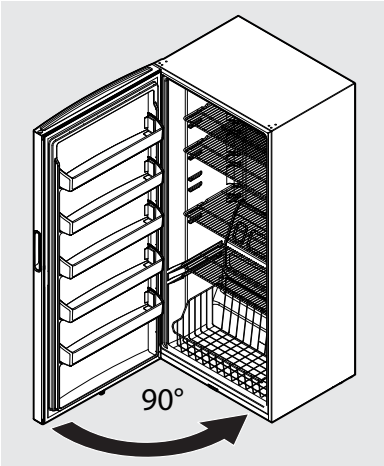

Figure 7

17. Using a Phillips™ screwdriver or a 5/16″ wrench, secure the top hinge using three 5/16″ screws. (see Figure 8).
18. Plug the freezer power cord back into the electrical outlet, and turn the freezer temperature control to the **Recommended** setting.

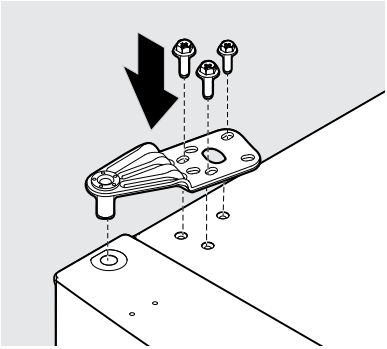

Figure 8

Cool Down Period

To ensure safe food storage, allow the appliance to operate with the door closed for at least 8 hours before loading it with food.

Appliance Control

NOTE

When first turning appliance on, adjust the appliance control to **Recommended**. After 24 hours, adjust the controls as needed.

IMPORTANT

Adjusting the appliance control to **OFF** turns off the compressor and prevents the appliance from cooling but does not disconnect the power to the light bulb and other electrical components. To turn off power to your appliance, you must unplug the power cord from the wall outlet.

Temperature Adjustment

Adjust the temperature setting gradually: adjust the knob in small increments, allowing the temperature to stabilize.

- For colder temperatures, adjust the control toward **Coldest**.
- For warmer temperatures, adjust the control toward **Cold**.

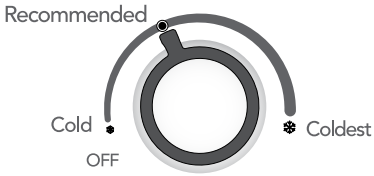

Appliance Control

Sabbath Mode

The Sabbath Mode is a feature that disables portions of the appliance and its controls in accordance with observance of the weekly Sabbath and religious holidays within the Orthodox Jewish community. The Sabbath Mode disables the appliance control.

NOTE

The temperature setting is not affected by the Sabbath Mode.

To enter Sabbath Mode

Turn the appliance control from **OFF** to **Recommended** and back 3 times within 15 seconds. Wait for the interior light to blink Off and On at **Recommended**. After the third time, the light remains off indicating the unit is in Sabbath mode. Set the appliance control to the desired temperature setting.

1	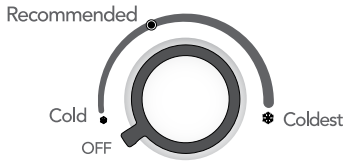	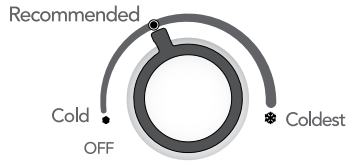
	No Change	**Light Blinks OFF/ON**
2	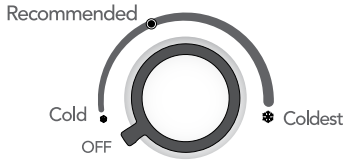	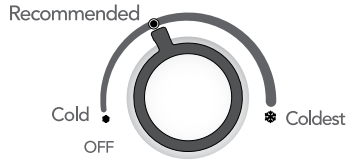
	Light Blinks OFF/ON	**Light Blinks OFF/ON**
3	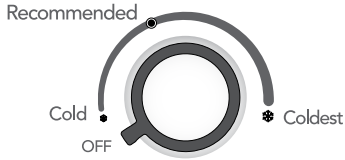	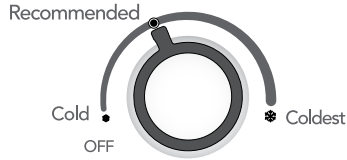
	Light Blinks OFF/ON	**Light is OFF** **Unit is in Sabbath Mode**

NOTE

While in Sabbath Mode, the lights will not work until you deactivate Sabbath Mode.

The appliance stays in Sabbath Mode after power failure recovery. You must deactivate it with the appliance control.

To exit Sabbath Mode

Turn the appliance control **OFF** and wait for 5 seconds before returning it to your desired temperature setting.

IMPORTANT

When exiting Sabbath Mode, be sure to turn the appliance control to your desired temperature setting; otherwise, the unit will not turn ON.

For further assistance, guidelines for proper use and a complete list of models with the Sabbath feature, please visit star-k.org.

Shelves

Easily adjust appliance shelves to suit individual needs. Before adjusting the shelves, remove all food.

To adjust shelves, lift the front of the shelf and pull forward.

To replace shelves, insert the rear of the shelf into any pair of shelf rails and carefully push the shelf back into position, making sure the shelf clips go in the notch in the liner.

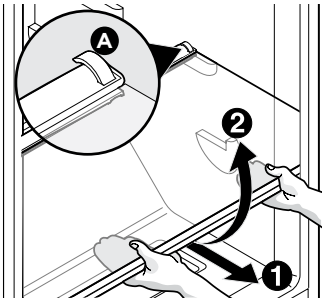

Glass Shelf

Door Storage

Door bins and shelves conveniently store jars, bottles, and cans. You can quickly select frequently used items.

To remove the door bin:

1. Push in on each side of the door bin to release it from the locking tabs.
2. Lift up on the bin and pull it straight out.

To install the door bins:

1. Push the bin back and down into the locking tabs.
2. The bin sides will lock into the tabs.

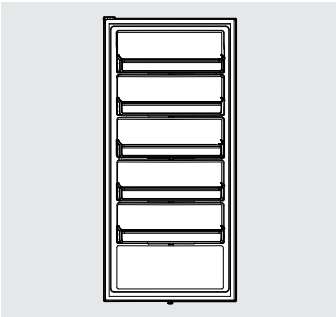

Freezer Basket

The freezer basket is ideal for large items or items that do not store well on the shelves.

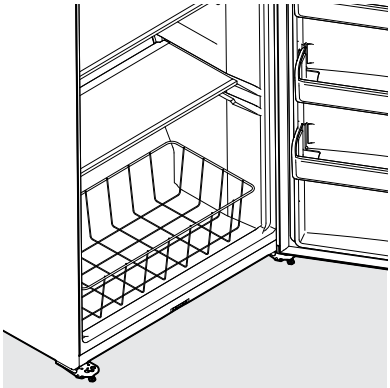

IMPORTANT

Do not fill the basket above the top edge, this will impact the air flow performance.

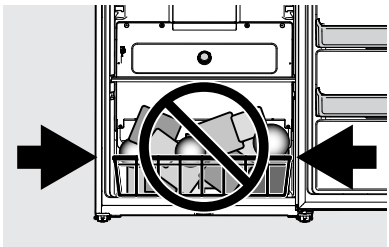

Protecting your investment

Keeping your appliance clean maintains appearance and prevents odor build-up. Wipe up any spills immediately and clean the appliance at least twice a year. When cleaning, take the following precautions:

- Always unplug the electrical power cord from the wall outlet before cleaning.
- Never use CHLORIDE or cleaners with bleach to clean stainless steel.
- Do not wash any removable parts in a dishwasher.
- Remove adhesive labels by hand. Do not use razor blades or other sharp instruments which can scratch the appliance surface.
- Do not remove the serial plate.

Do not use abrasive cleaners such as window sprays, scouring cleansers, brushes, flammable fluids, cleaning waxes, concentrated detergents, bleaches or cleansers containing petroleum products on plastic parts, interior doors, gaskets or cabinet liners. Do not use paper towels, metallic scouring pads, or other abrasive cleaning materials or strong alkaline solutions.

NOTE

If you set your temperature controls to turn off cooling, power to lights and other electrical components will continue until you unplug the power cord from the wall outlet.

CAUTION

- Pull the appliance straight out to move it. Shifting it from side to side may damage flooring.
- Damp objects stick to cold metal surfaces. Do not touch refrigerated surfaces with wet or damp hands.

CAUTION

Damp objects stick to cold metal surfaces. Do not touch interior metal surfaces with wet or damp hands.

Some upright freezers are frost-free and defrost automatically, but should be cleaned occasionally.

Care & Cleaning Tips		
Part	**What To Use**	**Tips and Precautions**
Interior & Door Liner	• Soap and water • Baking soda and water	Use 2 tbsp of baking soda in 1 qt of warm water. Be sure to wring excess water out of sponge or cloth before cleaning around controls, light bulb or any electrical part.
Door Gasket	• Soap and water	Wipe gaskets with a clean soft cloth.
Exterior	• Soap and water	Never use CHLORIDE or cleaners with bleach to clean stainless steel. **NOTE:** Always clean, wipe and dry with the grain to prevent scratching. Wash the rest of the cabinet with warm water and mild liquid detergent. Rinse well, and wipe dry with a clean soft cloth.
Replacing Light Bulbs	• Unplug appliance • Wear gloves • Remove light cover • Replace old bulb • Replace light cover • Plug in the appliance	**CAUTION**: Wear gloves when replacing AC LED light bulbs to avoid getting cut. Use same wattage when replacing bulb. **CAUTION:** Use only a 5-watt or less AC LED light bulb.

Let us help you troubleshoot your concern! This section will help you with common issues. If you need us, visit our website, chat with an agent, or call us. We may be able to help you avoid a service visit. If you do need service, we can get that started for you!

1-800-374-4432 (United States)
Frigidaire.com

1-800-265-8352 (Canada)
Frigidaire.ca

Common Occurrences	Before calling for service, review this list. It may save you time and expense. This list includes common occurrences that are not the result of defective workmanship or materials in this appliance.
Appliance does not run.	• Ensure plug is tightly pushed into electrical outlet. • Check/replace fuse with a 15-amp time-delay fuse. Reset circuit breaker. • The appliance control is turned to **OFF**. • Appliance may be in defrost cycle. Wait 20 minutes and check again.
Appliance temperature is unsatisfactory.	• Check freezer temperatures and adjust the temperature control as needed.
Appliance temperature is warmer than preferred.	• Set control to a colder setting until appliance temperature is satisfactory. Allow 24 hours for the temperature to stabilize.
Appliance is noisy or vibrates.	• The cabinet is not level. • Adjust the anti-tip bracket. See **Setting the anti-tip bracket** in the **INSTALLATION** section. • Floor is weak.
Odors in appliance.	• Interior needs to be cleaned. • Foods that produce odors should be covered or wrapped.
Cabinet light not working.	• Replace AC LED light bulb. Caution: Use only a 5-Watt AC LED light bulb. • Ensure plug is tightly pushed into electrical outlet. • Refer to **Sabbath Mode** according to your model.

LIMITED WARRANTY

Your appliance is covered by a one year limited warranty. For one year from your date of delivery, Electrolux will pay all costs for repairing or replacing any parts of this appliance that prove to be defective in materials or workmanship when such appliance is installed, used and maintained in accordance with the provided instructions.

Exclusions

This warranty does not cover the following:

1. Products with original serial numbers that have been removed, altered or cannot be readily determined.
2. Product that has been transferred from its original owner to another party or removed outside the USA or Canada.
3. Rust on the interior or exterior of the unit.
4. Products purchased "as-is" are not covered by this warranty.
5. Food loss due to any refrigerator or freezer failures.
6. Products used in a commercial setting.
7. Service calls which do not involve malfunction or defects in materials or workmanship, or for appliances not in ordinary household use or used other than in accordance with the provided instructions.
8. Service calls to correct the installation of your appliance or to instruct you how to use your appliance.
9. Expenses for making the appliance accessible for servicing, such as removal of trim, cupboards, shelves, etc., which are not a part of the appliance when it is shipped from the factory.
10. Service calls to repair or replace appliance light bulbs, air filters, water filters, other consumables, or knobs, handles, or other cosmetic parts.
11. Surcharges including, but not limited to, any after hour, weekend, or holiday service calls, tolls, ferry trip charges, or mileage expense for service calls to remote areas, including the state of Alaska.
12. Damages to the finish of appliance or home incurred during installation, including but not limited to floors, cabinets, walls, etc.
13. Damages caused by: services performed by unauthorized service companies; use of parts other than genuine Electrolux parts or parts obtained from persons other than authorized service companies; or external causes such as abuse, misuse, inadequate power supply, accidents, fires, or acts of God.

DISCLAIMER OF IMPLIED WARRANTIES; LIMITATION OF REMEDIES

CUSTOMER'S SOLE AND EXCLUSIVE REMEDY UNDER THIS LIMITED WARRANTY SHALL BE PRODUCT REPAIR OR REPLACEMENT AS PROVIDED HEREIN. CLAIMS BASED ON IMPLIED WARRANTIES, INCLUDING WARRANTIES OF MERCHANTABILITY OR FITNESS FOR A PARTICULAR PURPOSE, ARE LIMITED TO ONE YEAR OR THE SHORTEST PERIOD ALLOWED BY LAW, BUT NOT LESS THAN ONE YEAR. ELECTROLUX SHALL NOT BE LIABLE FOR CONSEQUENTIAL OR INCIDENTAL DAMAGES SUCH AS PROPERTY DAMAGE AND INCIDENTAL EXPENSES RESULTING FROM ANY BREACH OF THIS WRITTEN LIMITED WARRANTY OR ANY IMPLIED WARRANTY. SOME STATES AND PROVINCES DO NOT ALLOW THE EXCLUSION OR LIMITATION OF INCIDENTAL OR CONSEQUENTIAL DAMAGES, OR LIMITATIONS ON THE DURATION OF IMPLIED WARRANTIES, SO THESE LIMITATIONS OR EXCLUSIONS MAY NOT APPLY TO YOU. THIS WRITTEN WARRANTY GIVES YOU SPECIFIC LEGAL RIGHTS. YOU MAY ALSO HAVE OTHER RIGHTS THAT VARY FROM STATE TO STATE.

If You Need Service

Keep your receipt, delivery slip, or some other appropriate payment record to establish the warranty period should service be required. If service is performed, it is in your best interest to obtain and keep all receipts. Service under this warranty must be obtained by contacting Electrolux at the addresses or phone numbers below.

This warranty only applies in the USA and Canada. In the USA, your appliance is warranted by Electrolux Major Appliances North America, a division of Electrolux Home Products, Inc. In Canada, your appliance is warranted by Electrolux Canada Corp. Electrolux authorizes no person to change or add to any obligations under this warranty. Obligations for service and parts under this warranty must be performed by Electrolux or an authorized service company. Product features or specifications as described or illustrated are subject to change without notice.

USA
1-800-374-4432
Frigidaire
10200 David Taylor Drive
Charlotte, NC 28262

Electrolux

Canada
1.800.265.8352
Electrolux Canada Corp.
5855 Terry Fox Way
Mississauga, Ontario, Canada
L5V 3E4

FRIGIDAIRE

welcome **home**

Our home is your home. Visit us if you need help with any of these things:

owner support

accessories

service

registration

(See your registration card for more information.)

Frigidaire.com
1-800-374-4432

Frigidaire.ca
1-800-265-8352