FRIGIDAIRE

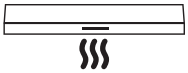

RANGE HOOD

use & care

Installation Instructions

316902495 (June 2026)
LIB0198545B

INTRODUCTION

Introduction	2
Important Safety Instructions	3
List of Materials	6
Location Requirements	6
Product Dimensions	7
Venting Requirements	7
Prepare the Location	9
Install Range Hood (Ducted version)	11
Install Range Hood (Recirculating version)	12
Range Hood Use	13
Range Hood Care	13
Troubleshooting	15
Warranty	16

Welcome to our family

Thank you for bringing Frigidaire into your home! We see your purchase as the beginning of a long relationship together.

This manual is your resource for the use and care of your product. Please read it before using your appliance. Keep it handy for quick reference. If something doesn't seem right, the troubleshooting section will help you with common issues.

FAQs, helpful tips and videos, cleaning products, and kitchen and home accessories are available at www.frigidaire.com.

We are here for you! Visit our website, chat with an agent, or call us if you need help. We may be able to help you avoid a service visit. If you do need service, we can get that started for you.

Keep your product info here so it's easy to find.

Model Number: _____

Serial Number: _____

Purchase Date: _____

Let's make it official! Be sure to register your product.

Visit us at Frigidaire.com/register

Or use your mobile device to scan the QR code.

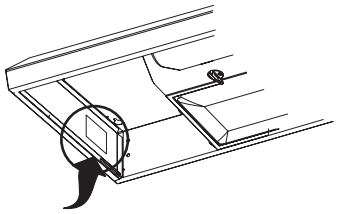

The serial plate is in the left side of the range hood

Installation Checklist

- ☐ Read all the safety instructions in the front of your Use & Care Manual.
- ☐ Remove all packaging materials from your appliance before cooking.
- ☐ Confirm that the electrical power to the appliance is turned on.
- ☐ Test range hood control to make sure it is working properly (page 13).
- ☐ Remember to complete your product registration!

Read all instructions before using this appliance.

Save these instructions for future references

Approved for residential appliances

For residential use only

This manual contains important safety symbols and instructions. Please pay attention to these symbols and follow all instructions given.

Do not attempt to install or operate your appliance until you have read the safety precautions in this manual. Safety items throughout this manual are labeled with a WARNING or CAUTION statement based on the risk type.

Warnings and important instructions appearing in this guide are not meant to cover all possible conditions and situations that may occur. Common sense, caution, and care must be exercised with installing, maintaining, or operating your appliance.

Always wear work gloves for all installation and maintenance operations

DEFINITIONS

⚠ This is the safety alert symbol. It is used to alert of potential personal injury hazards. Obey all safety messages that follow this symbol to avoid possible injury or death.

⚠ WARNING

This symbol alerts you to situations that may cause serious body harm, death or property damage.

⚠ CAUTION

Indicates a potentially hazardous situation which, if not avoided, may result in minor or moderate injury.

IMPORTANT

Indicates installation, operation or maintenance information which is important but not hazard-related.

NOTE

Indicates a short, informal reference – something written down to assist the memory or for future reference.

IMPORTANT INSTRUCTIONS FOR UNPACKING AND INSTALLATION

⚠ CAUTION

FOR GENERAL VENTILATING USE ONLY. DO NOT USE TO EXHAUST HAZARDOUS OR EXPLOSIVE MATERIALS OR VAPORS.

⚠ CAUTION

To reduce risk of fire and to properly exhaust air, be sure to duct air outside - do not vent exhaust air into spaces within walls, ceilings, attics, crawl spaces, or garages.

⚠ WARNING

TO REDUCE THE RISK OF FIRE, USE ONLY METAL DUCT WORK.
Install this hood in accordance with all requirements specified.

⚠ WARNING

TO REDUCE THE RISK OF FIRE, ELECTRIC SHOCK, OR INJURY TO PERSONS, OBSERVE THE FOLLOWING:
a) Installation work and electrical wiring must be done by qualified person(s) in accordance with all applicable codes and standards, including fire-rated construction.

b) Sufficient air is needed for proper combustion and exhausting of gases through the flue (chimney) of fuel burning equipment to prevent back drafting. Follow the heating equipment manufacturer's guideline and safety standards such as those published by the National Fire Protection Association (NFPA), and the American Society for Heating, Refrigeration and Air Conditioning Engineers (ASHRAE), and the local code authorities.

c) When cutting or drilling into wall or ceiling, do not damage electrical wiring and other hidden utilities.

d) Ducted fans must always be vented to the outdoors.

⚠ WARNING

To Reduce The Risk Of Fire Or Electric Shock, Do Not Use This Hood With Any External Solid State Speed Control Device.

WARNING

TO REDUCE THE RISK OF FIRE, ELECTRIC SHOCK, OR INJURY TO PERSONS, OBSERVE THE FOLLOWING:

a) Use this unit only in the manner intended by the manufacturer. If you have questions, contact the manufacturer.

b) Before servicing or cleaning unit, switch power off at service panel and lock the service disconnecting means to prevent power from being switched on accidentally. When the service disconnecting means cannot be locked, securely fasten a prominent warning device, such as a tag, to the service panel.

WARNING

TO REDUCE THE RISK OF INJURY TO PERSONS, IN THE EVENT OF A RANGE TOP GREASE FIRE, OBSERVE THE FOLLOWING:

a) SMOTHER FLAMES with a close - fitting lid, cookie sheet, or other metal tray, then turn off the gas burner or the electric element.

BE CAREFUL TO PREVENT BURNS. If the flames do not go out immediately, EVACUATE AND CALL THE FIRE DEPARTMENT.

b) NEVER PICK UP A FLAMING PAN - you may be burned.

c) DO NOT USE WATER, including wet dishcloths or towels - a violent steam explosion will result.

d) Use an extinguisher ONLY if:

1) You know you have a class ABC extinguisher, and you already know how to operate it.

2) The fire is small and contained in the area where it started.

3) The fire department is being called.

4) You can fight the fire with your back to an exit.

OPERATION

Always leave safety grills and filters in place. Without these components, operating blowers could catch onto hair, fingers and loose clothing.

The manufacturer declines all responsibility in the event of failure to observe the instructions given here for installation, maintenance and suitable use of the product. The manufacturer further declines all responsibility for injury due to negligence and the warranty of the unit automatically expires due to improper maintenance.

WARNING

TO REDUCE THE RISK OF A RANGE TOP GREASE FIRE.

a) Never leave surface units unattended at high settings. Boilovers cause smoking and greasy spillovers that may ignite. Heat oils slowly on low or medium settings.

b) Always turn hood ON when cooking at high heat or when flambéing food (i.e. Crepes Suzette, Cherries Jubilee, Peppercorn Beef Flambe').

c) Clean ventilating fans frequently. Grease should not be allowed to accumulate on fan or filter.

d) Use proper pan size. Always use cookware appropriate for the size of the surface element.

NOTE

This appliance is not intended for use by persons (including children) with reduced physical, sensory or mental capabilities, or lack of experience and knowledge, unless they have been given supervision or instruction concerning use of the appliance by a person responsible for their safety.

NOTE

Children should be supervised to ensure that they do not play with the appliance.

GROUNDING INSTRUCTIONS

WARNING

- Avoid fire hazard or electrical shock. Failure to follow this warning may cause serious injury, fire, or death.
- Avoid fire hazard or electrical shock. Do not use an adapter plug, use an extension cord, or remove grounding prong from the power cord. Failure to follow this warning may cause serious injury, fire, or death.

Observe all governing codes and ordinances.

Ensure that the electrical installation is adequate and in conformance with National Electrical Code, ANSI/NFPA 70 (latest edition), or CSA Standards C22.1-94, Canadian Electrical Code, Part 1 and C22.2 No. 0-M91 (latest edition) and all local codes and ordinances.

If codes permit and a separate ground wire is used, it is recommended that a qualified electrician determine that the ground path is adequate.

A copy of the above code standards can be obtained from:

National Fire Protection Association
One Batterymarch Park Quincy, MA 02269
CSA International
8501 East Pleasant Valley Road Cleveland, OH 44131-5575.

•• A 120 volt, 60 Hz., AC only, 15-amp, fused electrical circuit is required.

•• If the house has aluminum wiring, follow the procedure below:

1. Connect a section of solid copper wire to the pigtail leads.

2. Connect the aluminum wiring to the added section of copper wire using special connectors and/or tools designed and UL listed for joining copper to aluminum.

Follow the electrical connector manufacturer's recommended procedure. Aluminum/copper connection must conform with local codes and industry accepted wiring practices.

••Wire sizes and connections must conform with the rating of the appliance as specified on the model/serial rating plate.

The model/serial plate is located on the left side of the range hood.

••Wire sizes must conform to the requirements of the National Electrical Code ANSI/NFPA 70 — latest edition*, or CSA Standards C22.1-94, Canadian Electrical Code Part 1 and C22.2 No. 0-M91 - latest edition** and all local codes and ordinances.

If provided with an electrical plug, connect the hood to a receptacle that complies with current regulations and placed in an accessible position. Where an electrical plug is not provided (direct connection to electrical network) or the plug will not be in an accessible position after installation, place an approved bipolar switch in accessible position that provides full disconnection under overvoltage category III conditions, in accordance with local wiring rules.

It is the personal responsibility of the consumer to have the appropriate outlet or junction box with the correct, properly grounded wall receptacle installed by a qualified electrician. It is the responsibility and obligation of the consumer to contact a qualified installer to assure that the electrical installation is adequate and is in conformance with all local codes and ordinances.

IMPORTANT INSTRUCTIONS FOR CLEANING YOUR APPLIANCE

CAUTION

Before manually cleaning any part of the appliance, be sure all controls are turned off and the appliance is cool. Cleaning a hot appliance can cause burns.

Clean the appliance regularly to keep all parts free of grease that could catch fire. Do not allow grease to accumulate. Greasy deposits in the fan could catch fire.

Always follow the manufacturer's recommended directions for use of kitchen cleaners and aerosols. Be aware that excess residue from cleaners and aerosols may ignite causing damage and injury.

Clean ventilating hoods frequently - Grease should not be allowed to accumulate on hood or filter.

IMPORTANT INSTRUCTIONS FOR SERVICE AND MAINTENANCE

Do not repair or replace any part of the appliance unless specifically recommended in the manuals. All other servicing should be done only by a qualified technician. This reduces the risk of personal injury and damage to the appliance.

Always contact your dealer, distributor, service agent, or manufacturer about problems or conditions you do not understand.

Ask your dealer to recommend a qualified technician and an authorized repair service. Know how to disconnect the power to the appliance at the circuit breaker or fuse box in case of an emergency.

Do not touch a hot light bulb. Doing so could cause the bulb to break. Handle halogen lights (if equipped) with paper towels or soft gloves. Disconnect the appliance or shut off the power to the appliance before removing and replacing the bulb.

WARNING

California Residents: for cancer and reproductive harm information, visit www.P65Warnings.ca.gov

LIST OF MATERIALS

Parts included in your hood

☐ 1 - Vent	
☐ 1 - Grease Filter with Charcoal Filter	
☐ 4 - 0.45 x 1.3 cm mounting screws	
☐ 1- Optional Damper	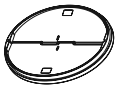

Parts Needed

- ☐ 2 - UL listed wire connectors
- ☐ Duct work as required
- ☐ Wall or roof cap with damper to match vent system as required
- ☐ Vent clamps/duct tape as required
- ☐ UL listed or CSA approved ½" strain relief

Tools/Materials required

- ☐ Drill
- ☐ 1¼" (3.0 cm) drill bit
- ☐ ⅛" (0.3 cm) drill bit for pilot holes
- ☐ Pencil
- ☐ Wire stripper or utility knife
- ☐ Tape measure or ruler
- ☐ Caulking gun and weatherproof caulking compound
- ☐ Flat-blade screwdriver
- ☐ Phillips screwdriver
- ☐ Saber or keyhole saw

For cabinets with recessed bottoms:

- ☐ Two - 2" (5.1 cm) wide filler strips. Length and thickness determined by recess dimensions.
- ☐ Four flat head wood screws or machine screws with washers and nuts (to attach filler strips).

IMPORTANT

Observe all governing codes and ordinances.

- It is the installer's responsibility to comply with rating plate. The model/serial rating plate is located inside the range hood on the left side (See page 2 for location). Range hood location should be away from strong draft areas, such as windows, doors and strong heating vents.

LOCATION REQUIREMENTS

IMPORTANT

- Cabinet opening dimensions that are shown must be used. Given dimensions provide minimum clearance. Consult the cooktop/range manufacturer installation instructions before making any cutouts.
- Grounded electrical outlet is required. See "Electrical Requirements" section.
- All openings in ceiling and wall where canopy hood will be installed must be sealed.
- Remove protection from the product before installation (if applicable).

For Mobile Home Installations

The installation of this range hood must conform to the Manufactured Home Construction Safety Standards, Title 24 CFR, Part 328 (formerly the Federal Standard for Mobile Home Construction and Safety, Title 24, HUD, Part 280) or when such standard is not applicable, the standard for Manufactured Home Installation 1982 (Manufactured Home Sites, Communities and Setups) ANSI A225.1/NFPA 501A, or latest edition, or with local codes.

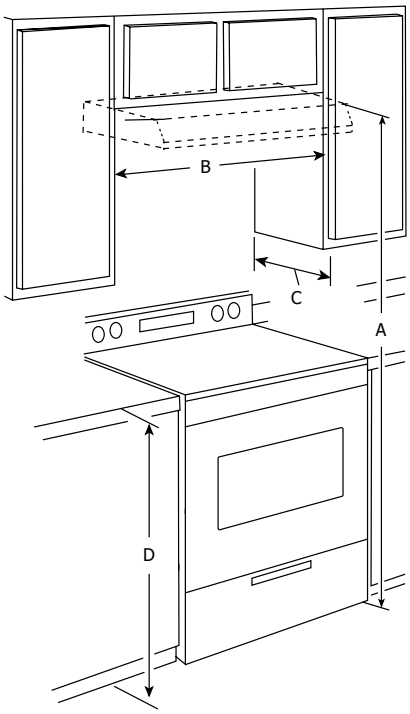

A. 66" (167 cm) suggested min. - top of range hood to floor.
B. 30" (76.2 cm) min. cabinet opening width.
C. 13" (33.0 cm) cabinet depth
D. 36" (91.4 cm) base cabinet height

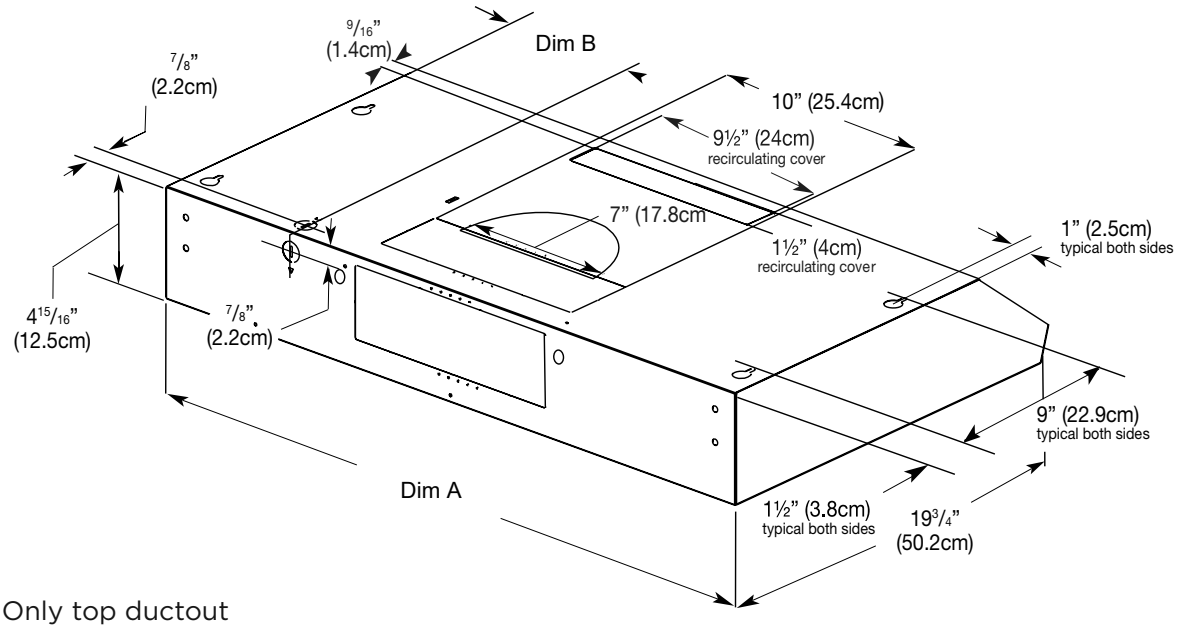

Only top ductout

	Dim A	Dim B
FCVW3025AS	30” (76.2 cm)	6 9/16” (16.7 cm)
FCVW3025AW		
FCVW3025AB		

VENTING REQUIREMENTS

- Vent system must terminate to the outdoors.
- Do not terminate the vent system into an attic or other enclosed area.
- Do not use a 4” (10.2 cm) laundry-type wall cap.
- Use a 7” (17.8 cm) round metal vent. Rigid metal vent is recommended.
- Plastic or metal foil vent is not recommended.
- The length of vent system and number of elbows should be kept to a minimum to provide efficient performance.

For the most efficient and quiet operation:

- Use no more than three 90° elbows.
- Make sure there is a minimum of 24” (61 cm) of straight vent between the elbows if more than 1 elbow is used.
- Do not install 2 elbows together.
- Use clamps or duct tape to seal all joints in the vent system.
- The vent system at exit must have a cold air damper.
- Use caulking to seal exterior wall or roof opening around the cap.
- Best performances are reached with straight piping, without elbows and using smooth pipe.
- Recommended equivalent calculated length vent system : round 50 ft (15.2m).

Cold Weather Installations

An additional back draft damper should be installed to minimize backward cold air flow and a thermal break should be installed to minimize conduction of outside temperatures as part of the vent system. The damper should be on the cold air side of the thermal break.

The break should be as close as possible to where the vent system enters the heated portion of the house.

Makeup Air

Local building codes may require the use of makeup air systems when using ventilation systems greater than specified CFM of air movement. The specified CFM varies from locale to locale. Consult your HVAC professional for specific requirements in your area.

8 VENTING REQUIREMENTS

Vent system can terminate either through the roof or wall. Use 7” (17.8 cm) round vent with a maximum length of 50 ft (15.2 m) for vent system.

NOTE

Flexible vent is not recommended. Flexible vent creates both back pressure and air turbulence that greatly reduce performance.

Roof venting

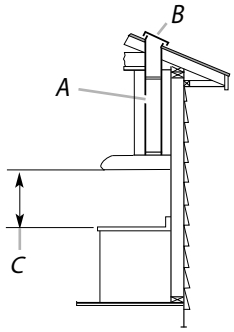

A. 7” (17.8 cm) round vent through the roof. (purchased separately)
B. Roof cap with damper (purchased separately)
C. 24” (61.0 cm) min. for electric ranges and 30” (76.2cm) min. for gas ranges installation above the cooking surface.

Wall venting

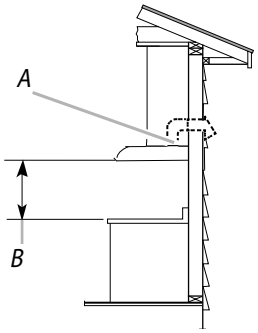

A. 7” (17.8 cm) round vent through the top (purchased separately)
B. 24” (61.0 cm) min. for electric ranges and 30” (76.2cm) min. for gas ranges installation above the cooking surface.

Recirculating

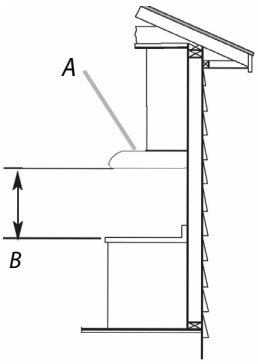

A. Remove cover
B. 24” (61.0 cm) min.for electric ranges and 30” (76.2cm) min. for gas ranges installation above the cooking surface.

Calculating Vent System Length

To calculate the length of the system you need, add the equivalent feet (meters) for each vent piece used in the system.

It’s important to note that the actual equivalent length can vary depending on factors design, material and any internal obstructions within the fitting. This is a general guideline, and other sources may provide slightly different values

Manufacturer data and engineering references should always be consulted for accurate and up to date information on the equivalent length of a specific fitting.

7” (17.8 cm) Round Vent System

Vent Piece	Length	
90° elbow	15 ft (4.57 m)	
7” (17.8 cm) wall cap	0.0 ft (0.0 m)	

Example Vent System

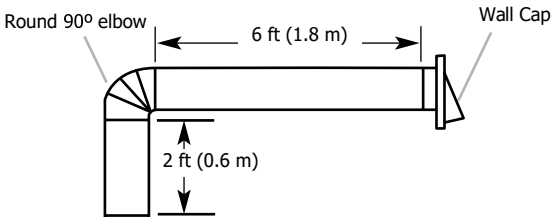

Maximum recommended length	= 50 ft (15.2 m)
90° elbow 6 ft (1.8 m) straight 1 wall cap	= 15 ft (4.57 m) = 6 ft (1.8 m) = 0.0 ft (0.0 m)
7” (17.8 cm) Wall cap	= 21 ft (6.37 m)

NOTE

Before making cutouts, make sure there is proper clearance within the ceiling or wall.

1. Disconnect power.
2. Lift the range hood and set it upside down onto covered surface.
3. If cabinet has recessed bottom, add wood filler strips on each side. Install screws to attach filler strips in locations shown.

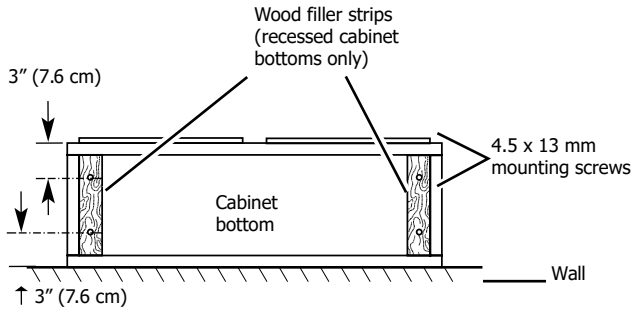

Determine Wiring Hole Location

1. Determine and clearly mark a vertical centerline on the wall and cabinet bottom.

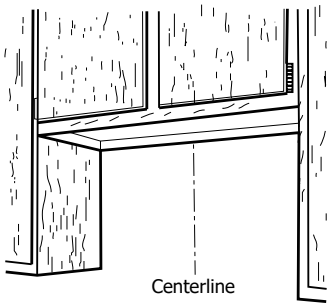

To wire through top:

2. Mark a line distance (A) from the right of the centerline on the underside of the cabinet. Mark the point on this line that is 2" (5.08 cm) from back wall. Drill a 1¼" (3.2 cm) diameter hole (B) through the cabinet at this point.

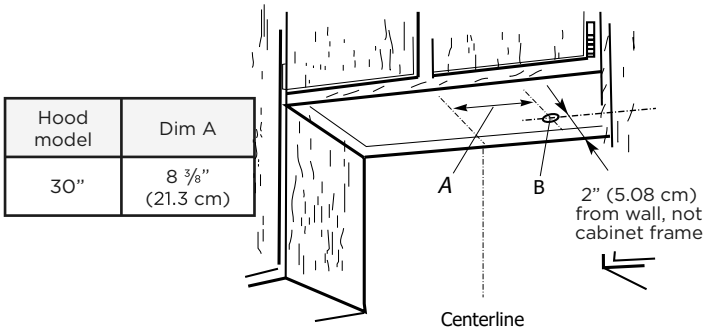

Hood model	Dim A
30"	8 ⅜" (21.3 cm)

To wire through wall:

1. Mark a line distance (A) from the right of the centerline on the underside of the wall. Mark the point on this line that is ⅞" (2.2 cm) from the underside of the cabinet. Drill a 1¼" (3.2 cm) diameter hole (B) through the rear wall at this point.

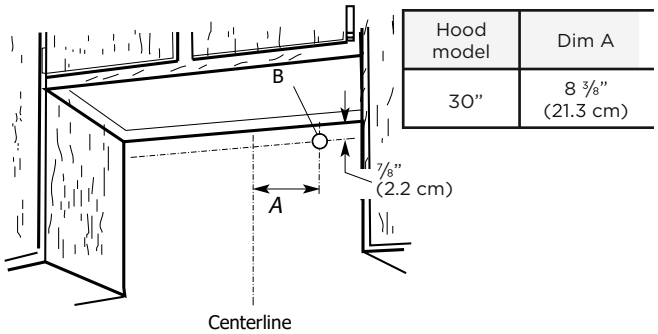

Hood model	Dim A
30"	8 ⅜" (21.3 cm)

VENTING

Choose venting exhaust discharge from the options listed that follows:

Style 1 - Recirculating Hood version

For this installation, go to "Install Range Hood (recirculating version)" on page 15.

NOTE: For installations which are venting out the roof or wall, **the recirculating vent cover must remain in place**.

NOTE: Consider use the A measure for 7"(17.8 cm) round transition and B measure for recirculating system on your cabinet dimensions.

Style 2 - Cut Openings for 7” (17.8 cm) Round Vent to Round Vent Transition

Roof Venting

To make a circular vent opening on the underside of the cabinet top:

1. Mark a centerline on the underside of the top of cabinet.
2. Mark a line 5” (12.7 cm) from the back wall on the underside of the top of cabinet.
3. Use a compass or a circle template to draw a circle with a diameter of 7½” (19 cm). Use saber or keyhole saw to cut the circular vent opening.
4. Repeat steps 1-3 for the underside of the top of the cabinet.

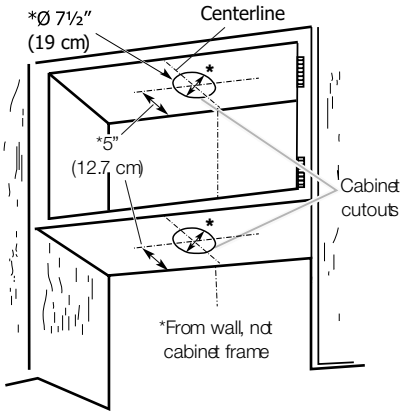

Install Vent System

1. Install vent through the vent opening in upper cabinet or wall. Complete venting system according to the selected venting method. See “Venting Requirements” section.
2. Use caulking to seal exterior wall or roof opening around the cap.

NOTE

Your model includes a 7” (17.8 cm) round vent mounting plate inside the package.

NOTE

Before beginning installation, remove the transition installed in your hood.

1. Lift the range hood up under cabinet and determine final location by centering beneath cabinet. Mark on the underside of cabinet the location of the 4 keyhole mounting slots on the range hood (See slot dimensions on page 9). Set range hood aside on a covered surface.

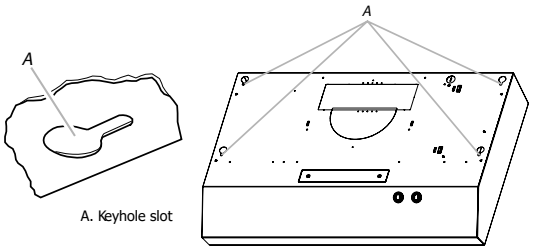

2. Use ⅛” (3 mm) drill bit and drill 4 pilot holes as shown.

   NOTE: Make the drill holes on the thin area of the slot.

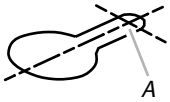

A. Drill pilot hole

3. Install the 4 - .45 cm x 1.3 cm mounting screws in pilot holes. Leave about ¼” (6.4 mm) space between screw heads and cabinet to slide range hood into place.

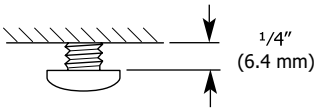

4. Remove the top round vent knockout.

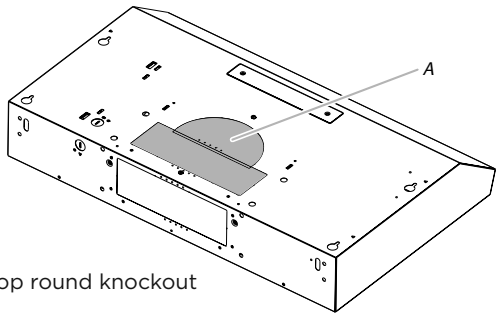

A. Top round knockout

NOTE

The knockout should be removed with a screwdriver or leverage element, not a hammer.

DUCTED VERSION

Vent Connector Installation

NOTE

Remove protective film entirely.

NOTE

Removal of the charcoal filter is required for this version. See section "Range Hood Care".

Install 7" (17.8 cm) round vent mounting plate. Attach to range hood using the indicated screws provided in hardware kit.

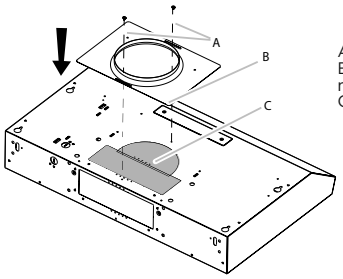

A. .29 x .65 cm screws
B. 7" (17.8 cm) round vent mounting plate.
C. Round vent knockout

NOTE

The 7" (17.8 cm) round vent mounting plate can be installed up to 1" (2.5 cm) on either side of the hood center to accommodate off center ductwork.

Power Supply Cable Installation

1. For direct wire installations, run the home power supply cable according to the National Electric Code or CSA standards and local codes and ordinances.

   There must be enough wiring from the fused disconnect (or circuit breaker) box to make the connection in the hood electrical terminal box.

NOTE

Do not reconnect power until the installation is complete.

2. Remove the screw from the terminal box cover. Remove terminal box cover and set aside.

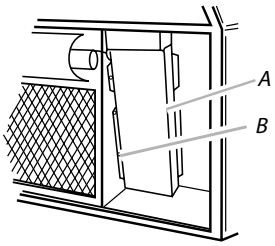

A. Terminal box cover
B. Screw

3. Remove the power supply knockout from the top or rear of the vent hood (depending on the incoming location of your home power supply cable) and install a UL listed or CSA approved ½" strain relief.

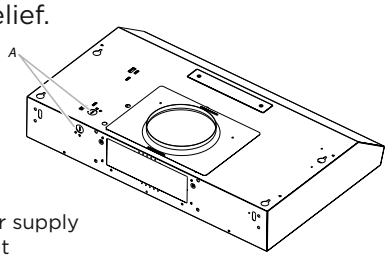

A. Power supply knockout

4. Using 2 or more people. lift the hood into final position. Tighten the strain relief screws.
5. Position the range hood so that the large end of the keyhole slots are over the mounting screws. Then push the hood toward the wall so that the screws are in the neck of the slots. Tighten the mounting screws, making sure the screws are in the narrow neck of slots.
6. Connect vent duct work to hood. Seal joints with vent clamps or duct tape to make secure and airtight.
7. Check that back draft dampers work properly.

MAKE ELECTRICAL CONNECTION

WARNING

Electrical Shock Hazard
Disconnect power before servicing.
Replace all parts and panels before operating.
Failure to do so can result in death or electrical shock.

1. Disconnect power.

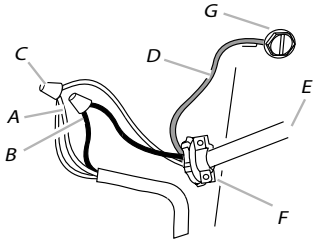

A.White wires
B. Black wires
C. UL listed wire connector
D. Green (or bare) ground wire
E. Home power supply cable
F. UL listed or CSA approved ½" strain relief
G. Green ground screw

2. Use UL listed wire connectors and connect white wires (A) together. **(there are two white wires on the hood, both must be connected to the power supply).**
3. Use UL listed wire connectors and connect black wires (B) together.
4. Connect green (or bare) ground wire from power supply to green ground screw in terminal box and securely tighten.
5. Install terminal box cover and reconnect power.

WARNING

Fire Hazard
Electrically ground the blower. Use copper wire.
Connect ground wire to green ground screw in terminal box. Failure to do so can result in death, fire or electrical shock.

Complete Installation

1. Replace grease filter if removed. See the "Range Hood Care" section.
2. Check the operation of the range hood fan and light. See "Range Hood Use" section. If range hood does not operate, check to see whether a circuit breaker has tripped or a household fuse has blown. Disconnect power and check wiring connections.

NOTE

To get the most efficient use from your range hood, read "Range Hood Use" section.

RECIRCULATING VERSION

NOTE

Remove protective film entirely.

1. Lift the range hood up under cabinet and determine final location by centering beneath cabinet. Mark on the underside of cabinet the location of the 4 keyhole mounting slots on the range hood (See slots dimensions on page 10). Set range hood aside on a covered surface.

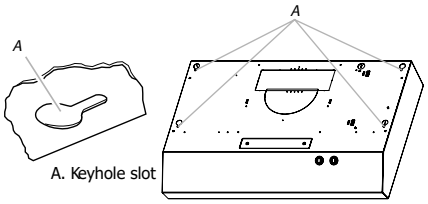

2. Use ⅛" (3 mm) drill bit and drill 4 pilot holes as shown.

NOTE: Make the drill holes on the thin area of the slot.

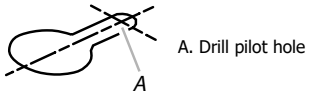

3. Install the 4 - .45 cm x 1.3 cm mounting screws in pilot holes. Leave about ¼" (6.4 mm) space between screw heads and cabinet to slide range hood into place.

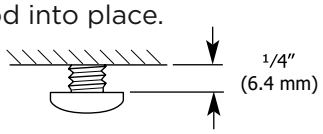

Power Supply Cable Installation

1. For direct wire installations, run the home power supply cable according to the National Electric Code or CSA standards and local codes and ordinances.

   There must be enough wiring from the fused disconnect (or circuit breaker) box to make the connection in the hood electrical terminal box.

NOTE

Do not reconnect power until the installation is complete.

2. Remove the screw from the terminal box cover. Remove terminal box cover and set aside.
3. Remove the power supply knockout from the top or rear of the vent hood (depending on the incoming location of your home power supply cable) and install a UL listed or CSA approved ½" strain relief.
4. Using 2 or more people, lift the hood into final position. Tighten the strain relief screws.
5. Position the range hood so that the large end of the keyhole slots are over the mounting screws. Then push the hood toward the wall so that the screws are in the neck of the slots. Tighten the mounting screws, making sure the screws are in the narrow neck of slots.

Recirculation Vent Cover

For installations which are recirculating the air exhaust, **the recirculation vent cover must be removed.**

Remove the recirculating vent cover by removing the 2 mounting screws with a Phillips screwdriver.

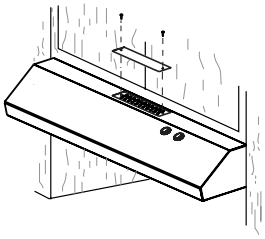

NOTE: For installations which are venting out the roof or wall, **the recirculating vent cover must remain in place**.

Do not remove as unit will not perform properly.

To complete the installation, go to "Make Electrical Connection" section on page 11.

NOTE: Consider use the A measure for 7"(17.8 cm) round transition and B measure for recirculating system.

The range hood is designed to remove smoke and cooking vapors from the cooktop area. For best results, start the hood before cooking and allow it to operate several minutes after the cooking is complete to clear all smoke from the kitchen.

A Charcoal Filter Kit to remove odors is already included (2 filters). See page 14 for more information for the replacement of this this kit.

The hood controls are located on the top of the range hood.

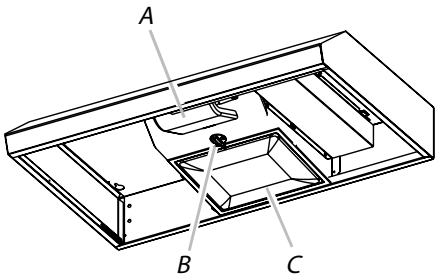

A. LED light housing and cover
B. Charcoal filter retainer
C. Grease filter

Hood Controls

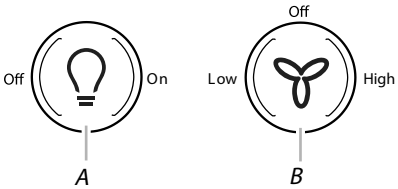

A. On/Off light switch
B. Fan speed switch

Operating the light

Push the light switch to the right to turn the light On.

Push the light switch to the left to the turn the light Off.

Operating the fan

Push the fan switch to the left for Low speed. Push the fan switch to the right for High speed. Push the fan switch to the middle for Off.

Cleaning

WARNING

To Reduce The Risk Of Fire Or Electrical shock disconnect from power supply before cleaning.

IMPORTANT

Clean the hood and grease filters frequently according to the following instructions. Replace grease filter before operating hood.

IMPORTANT

Exterior Surfaces

Do not use soap-filled scouring pads, abrasive cleaners, cooktop polishing creme, steel wool, gritty washcloths or paper towels.

To avoid damage to the stainless steel, do not use cleaners that contain chlorine.

Cleaning Method:

- Use warm water with liquid detergent or all purpose cleaner and soft cloth to clean outside surfaces.
- Rinse with clean water and dry with soft, lint-free cloth.
- Use glass cleaner to remove fingerprints
- For stainless steel finish rub in direction of grain to avoid scratching or damaging the surface.

NOTE: Do not stainless steel brush to avoid scratching or damaging the surface.

To clean or replace grease filter:

1. Remove screw from the plastic filter retainer clip with phillips screwdriver
2. Turn the filter retainer to release filter.

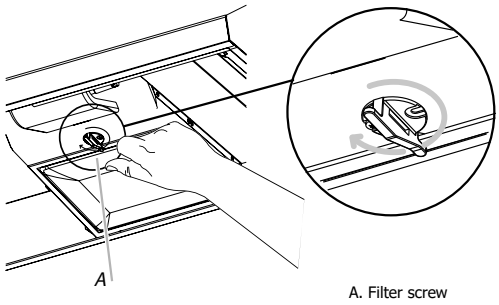

A. Filter screw

3. Reinstall the filter by placing the back edge in the channel at rear of hood. Push filter into place, turn the filter retainer to secure filter to range hood.

4. Replace screw in the filter retainer
5. To clean grease filter, soak the filters in hot water using a mild detergent. Rinse well and shake to dry. Or place in upper rack of dishwasher to clean.

   NOTE: Do not use ammonia. The aluminum on the grease filter will corrode and darken.

   NOTE: You can use either dishwasher or hot detergent solution and rinse in clean water.

NOTE

The grease filter is dishwasher safe.

To avoid grease filter damage while cleaning, place filter into the dishwasher top rack for cleaning

Charcoal / Grease Filter

1. For recirculating vent hood, an optional charcoal filter is available and already installed in filter.
2. The charcoal filter is not washable. It should last up to 6 months with normal use. Replace the old charcoal filter with a new one.
3. If you want to transform your hood for outdoor exhaust system you must remove the charcoal layer from the filter.
4. The charcoal layer is secured with a set of staples at the center of the filter; to remove the layer without damaging the filter, separate the edges of the charcoal from the frame until only the staples are left holding it.

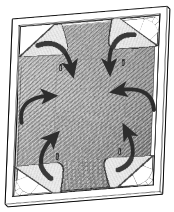

5. Pull the charcoal layer in the direction parallel to the staples.
   If you pull in other direction, it could be more difficult to detatch and the filter may suffer certain level of deformation.

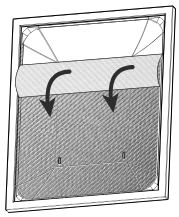

6. The layer can easily be removed by hand but in case of need, use scissors to cut it out.

Problem	Possible Causes	Solutions
After installation, the unit doesn't work.	1. The power line and the cable locking connector is not connecting properly.	1. Check the power connection with the unit is connected properly.
	2. The wires from the switches are disconnected or loose.	2. Make sure the wires on the switches are connected properly.
Light works, but motor is not turning.	1. The motor is defective, possible seized.	1. Change the motor.
	2. The thermally protected system detects if the motor is too hot to operate and shuts the motor down.	2. The motor will function properly after the thermally protected system cool down.
	3. The motor wire is not connected.	3. Make sure the motor wire is plugged into the Molex connector.
The unit is vibrating.	1. The motor is not secure in place.	1. Tighten the motor in place.
	2. Damaged blower wheel.	2. Change the blower.
	3. The hood is not secured in place.	3. Check the installation of the hood.
The motor is working, but the lights are not.	1. Defective lamp.	1. Change the LED lamp.
	2. The LED lamp is loose.	2. Tighten the LED lamp.
	3. The wires on the light switch are loose.	3. Make sure the wires on light switch are connected properly.
The hood is not venting out properly.	1. The hood might be hanging to high from the cook top.	1. Adjust the distance between the cook top and the bottom of the hood within 24" (61 cm) and 32" (76.2 cm) range.
	2. The wind from the opened windows or opened doors in the surrounding area are affecting the ventilation of the hood.	2. Close all the windows and doors to eliminate the outside wind flow.
	3. Blockage in the duct opening or duct work.	3. Remove all the blocking from the duct work or duct opening.
	4. The direction of duct opening is against the wind.	4. Adjust the duct opening direction.
	5. Using the wrong size of ducting.	5. Change the ducting to correct size.
Metal filter is vibrating.	1. Grease filter is loose.	1. Make sure filter retainer still works.
	2. Filter retainer does not freely move	2. Replace grease filter.

frigidaire.ca/right-to-repair/

Though Frigidaire makes every effort to make replacement parts, repair services and information necessary to maintain or repair our products available to consumers, parts, service and information are not guaranteed, pursuant to section 39 of the Consumer Protection Act, CQLR, c. P-40.1 and sections 79.18 to 79.20 of the Regulation respecting the application of the Consumer Protection Act, CQLR, c P-40.1, r. 3.

16 WARRANTY

Your appliance is covered by a one year limited warranty. For one year from your original date of purchase, Electrolux will pay all costs for repairing or replacing any parts of this appliance that prove to be defective in materials or workmanship when such appliance is installed, used and maintained in accordance with the provided instructions.

Exclusions

This warranty does not cover the following:

1. Products with original serial numbers that have been removed, altered or cannot be readily determined.
2. Product that has been transferred from its original owner to another party or removed outside the USA or Canada.
3. Rust on the interior or exterior of the unit.
4. Products purchased "as-is" are not covered by this warranty.
5. Food loss due to any refrigerator or freezer failures.
6. Products used in a commercial setting.
7. Service calls which do not involve malfunction or defects in materials or workmanship, or for appliances not in ordinary household use or used other than in accordance with the provided instructions.
8. Service calls to correct the installation of your appliance or to instruct you how to use your appliance.
9. Expenses for making the appliance accessible for servicing, such as removal of trim, cupboards, shelves, etc., which are not a part of the appliance when it is shipped from the factory.
10. Service calls to repair or replace appliance light bulbs, air filters, water filters, other consumables, or knobs, handles, or other cosmetic parts.
11. Surcharges including, but not limited to, any after hour, weekend, or holiday service calls, tolls, ferry trip charges, or mileage expense for service calls to remote areas, including the state of Alaska.
12. Damages to the finish of appliance or home incurred during installation, including but not limited to floors, cabinets, walls, etc.
13. Damages caused by: services performed by unauthorized service companies; use of parts other than genuine Electrolux parts or parts obtained from persons other than authorized service companies; or external causes such as abuse, misuse, inadequate power supply, accidents, fires, or acts of God.

DISCLAIMER OF IMPLIED WARRANTIES; LIMITATION OF REMEDIES

CUSTOMER'S SOLE AND EXCLUSIVE REMEDY UNDER THIS LIMITED WARRANTY SHALL BE PRODUCT REPAIR OR REPLACEMENT AS PROVIDED HEREIN. CLAIMS BASED ON IMPLIED WARRANTIES, INCLUDING WARRANTIES OF MERCHANTABILITY OR FITNESS FOR A PARTICULAR PURPOSE, ARE LIMITED TO ONE YEAR OR THE SHORTEST PERIOD ALLOWED BY LAW, BUT NOT LESS THAN ONE YEAR. ELECTROLUX SHALL NOT BE LIABLE FOR CONSEQUENTIAL OR INCIDENTAL DAMAGES SUCH AS PROPERTY DAMAGE AND INCIDENTAL EXPENSES RESULTING FROM ANY BREACH OF THIS WRITTEN LIMITED WARRANTY OR ANY IMPLIED WARRANTY. SOME STATES AND PROVINCES DO NOT ALLOW THE EXCLUSION OR LIMITATION OF INCIDENTAL OR CONSEQUENTIAL DAMAGES, OR LIMITATIONS ON THE DURATION OF IMPLIED WARRANTIES, SO THESE LIMITATIONS OR EXCLUSIONS MAY NOT APPLY TO YOU. THIS WRITTEN WARRANTY GIVES YOU SPECIFIC LEGAL RIGHTS. YOU MAY ALSO HAVE OTHER RIGHTS THAT VARY FROM STATE TO STATE.

If You Need Service

Keep your receipt, delivery slip, or some other appropriate payment record to establish the warranty period should service be required. If service is performed, it is in your best interest to obtain and keep all receipts. Service under this warranty must be obtained by contacting Electrolux at the addresses or phone numbers below.

This warranty only applies in the USA and Canada. In the USA, your appliance is warranted by Electrolux Major Appliances North America, a division of Electrolux Home Products, Inc. In Canada, your appliance is warranted by Electrolux Canada Corp. Electrolux authorizes no person to change or add to any obligations under this warranty. Obligations for service and parts under this warranty must be performed by Electrolux or an authorized service company. Product features or specifications as described or illustrated are subject to change without notice.

USA
1-800-374-4432
Frigidaire
10200 David Taylor Drive
Charlotte, NC 28262

Electrolux

Canada
1.800.265.8352
Electrolux Canada Corp.
5855 Terry Fox Way
Mississauga, Ontario, Canada
L5V 3E4

FRIGIDAIRE

welcome home

Our home is your home. Visit us if you need help with any of these things:

- owner support
- accessories
- service
- registration

(See your registration card for more information.)

Frigidaire.com
1-800-374-4432

Frigidaire.ca
1-800-265-8352