FRIGIDAIRE

All about the Installation, Use & Care of your Range Hood

USA 1-800-944-9044
www.frigidaire.com

Canada 1-800-265-8352
www.frigidaire.ca

LI30MD / 316902497
Jun/26

PRODUCT RECORD AND REGISTRATION

CONTENTS

Important Safety Instructions 3
List of materials 5
Electrical requirements 5
Location requirements 6
Product dimensions 6
Venting Requirements 7
Prepare the location 8
Install Range Hood (Ducted version) 10
Make Electrical Connection 12
Installing Range Hood (Recirculating version) 13
Range Hood Use 14
Range Hood Care 14
Troubleshooting 16
Warranty Information 17

Be sure to visit us online at
www.frigidaire.com
for a complete line of accessories.

Thank you for choosing **Frigidaire.**

This Use & Care Guide is part of our commitment to customer satisfaction and product quality throughout the service life of your new appliance.We view your purchase as the beginning of a relationship. To ensure our ability to continue serving you, please use this page to record important product information.

Need help??

Visit the Frigidaire web site at www.frigidaire.com
Before you call for service, there are a few things you can do to help us serve your better.

Read this Use & Care manual.
It contains instructions to help you use and maintain your range properly.

If you received a damaged range Hood...
immediately contact the dealer (or builder) that sold you the range hood.

Save time and money.
Check the "Troubleshooting" list. This section helps step you through some common problems that might occur. If you do need service, help is only a phone call away. Call Frigidaire Customer Services at **1-800-944-9044.**

Product Registration
Registering your product with Frigidaire enhances our ability to serve you. You can register online at **www.frigidaire.com** or by dropping your Product Registration Card in the mail.

Serial Plate Location

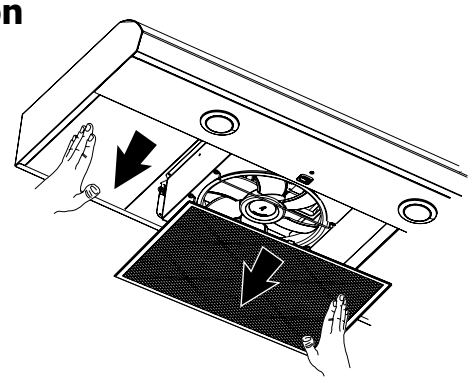

Remove the grease filter and the left side panel

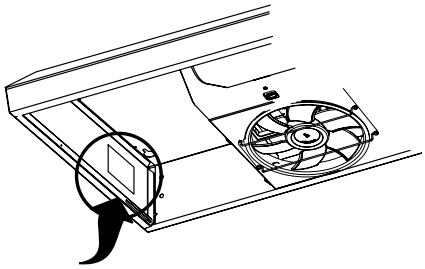

The serial plate is on the left side of the range hood

Record model & serial numbers here

Purchase date

Model number

Serial number

Read all instructions before using this appliance.

Save these instructions for future references

Approved for residential appliances

For residential use only

Do not attempt to install or operate your appliance until you have read the safety precautions in this manual. Safety items throughout this manual are labeled with a WARNING or CAUTION based on the risk type.

⚠This is the safety alert symbol. It is used to alert you to potential personal injury hazards. Obey all safety messages that follow this symbol to avoid possible injury or death.

⚠ WARNING

This symbol alerts you to situations that may cause serious body harm, death or property damage.

⚠ CAUTION

CAUTION indicates a potentially hazardous situation which, if not avoided, may result in minor or moderate injury.

➡ IMPORTANT

IMPORTANT indicates installation, operation, maintenance or valuable information that is not hazard related.

IMPORTANT SAFETY INSTRUCTIONS

⚠ CAUTION

FOR GENERAL VENTILATING USE ONLY. <u>DO NOT</u> USE TO EXHAUST HAZARDOUS OR EXPLOSIVE MATERIALS OR VAPORS.

⚠ WARNING

TO REDUCE THE RISK OF FIRE, ELECTRIC SHOCK, OR INJURY TO PERSONS, OBSERVE THE FOLLOWING:

A. Use this unit only in the manner intended by the manufacturer. If you have questions, contact the manufacturer

B. Before servicing or cleaning the unit, switch power off at service panel and lock service panel disconnecting means to prevent power from being switched on accidentally. When the service disconnecting means cannot be locked, securely fasten a prominent warning device, such as a tag, to the service panel.

C. Installation Work and Electrical Wiring Must Be Done By Qualified Person(s) In Accordance With all Aplicable Codes & Standards, Including Fire-rated Construction.

D. Sufficient air is needed for proper combustion and ex hausting of gases through the flue (Chimney) of fuel burning equipment to prevent back- drafting. Follow the heating equipment manufacturers guideline and safety standards such as those published by the National Fire Protection Association (NFPA), the American Society for Heating, Refrigeration and Air Conditioning Engineers (ASHRAE), and the local code authorities.

E. When cutting or drilling into wall or ceiling, do not damage electrical wiring and other hidden utilities.

F. Ducted systems must always be vented to the outdoors.

⚠ CAUTION

To reduce risk of fire and to properly exhaust air, be sure to duct air outside - do not vent exhaust air into spaces within walls, ceilings, attics, crawl spaces, or garages.

⚠ WARNING

TO REDUCE THE RISK OF FIRE, USE ONLY METAL DUCT WORK.
Install this hood in accordance with all requirements specified.

IMPORTANT SAFETY INSTRUCTIONS

⚠ WARNING

To Reduce The Risk Of Fire Or Electric Shock, Do Not Use This Hood With Any External Solid State Speed Control Device.

⚠ WARNING

TO REDUCE THE RISK OF A RANGE TOP GREASE FIRE.

a) Never leave surface units unattended at high settings. Boilovers cause smoking and greasy spillovers that may ignite. Heat oils slowly on low or medium settings.

b) Always turn hood ON when cooking at high heat or when flambeing food (I.e. Crepes Suzette, Cherries Jubilee, Peppercorn Beef Flambe').

c) Clean ventilating fans frequently. Grease should not be allowed to accumulate on fan or filter.

d) Use proper pan size. Always use cookware appropriate for the size of the surface element.

⚠ WARNING

TO REDUCE THE RISK OF INJURY TO PERSONS, IN THE EVENT OF A RANGE TOP GREASE FIRE, OBSERVE THE FOLLOWING:

a) **SMOTHER FLAMES** with a close - fitting lid, cookie sheet, or other metal tray, then turn off the gas burner or the electric element.

BE CAREFUL TO PREVENT BURNS. If the flames do not go out immediately, **EVACUATE AND CALL THE FIRE DEPARTMENT.**

b) **NEVER PICK UP A FLAMING PAN** - you may be burned.

c) **DO NOT USE WATER**, including wet dishcloths or towels - a violent steam explosion will result.

d) Use an extinguisher **ONLY** if:

1) You know you have a class ABC extinguisher, and you already know how to operate it.
2) The fire is small and contained in the area where it started.
3) The fire department is being called.
4) You can fight the fire with your back to an exit.

OPERATION

Always leave safety grills and filters in place.Without these components, operating blowers could catch onto hair, fingers and loose clothing.

The manufacturer declines all responsibility in the event of failure to observe the instructions given here for installation,maintenance and suitable use of the product. The manufacturer further declines all responsibility for injury due to negligence and the warranty of the unit automatically expires due to improper maintenance.

LIST OF MATERIALS

Parts included in your hood

- 4 - 0.45 x 1.3 cm mounting screws
- 2 - .35 x .65 cm rectangular vent transition mounting screws
- 2 - .29 x .65 cm round metal mounting plate mounting screws
- 3¼″ x 10″ (8.3 x 25.4 cm) rectangular metal vent system.
- 7″ (17.8 cm) round metal mounting plate.

Parts Needed

- 2 - UL listed wire connectors
- Wall or roof cap with damper to match vent system
- Vent clamps/duct tape as required
- UL listed or CSA approved ½″ strain relief

Tools/Materials required

- Drill
- 1¼″ (3.0 cm) drill bit
- ⅛″ (0.3 cm) drill bit for pilot holes
- Pencil
- Wire stripper or utility knife
- Tape measure or ruler
- Caulking gun and weatherproof caulking compound
- Flat-blade screwdriver
- Phillips screwdriver
- Saber or keyhole saw

For cabinets with recessed bottoms:

- Two - 2″ (5.1 cm) wide filler strips. Length and thickness determined by recess dimensions.
- Four flat head wood screws or machine screws with washers and nuts (to attach filler strips).

ELECTRICAL REQUIREMENTS

Observe all governing codes and ordinances.
Ensure that the electrical installation is adequate and in conformance with National Electrical Code, ANSI/NFPA 70 (latest edition), or CSA Standards C22.1-94, Canadian Electrical Code, Part 1 and C22.2 No. 0-M91 (latest edition) and all local codes and ordinances.
If codes permit and a separate ground wire is used, it is recommended that a qualified electrician determine that the ground path is adequate.
A copy of the above code standards can be obtained from:

National Fire Protection Association
One Batterymarch Park
Quincy, MA 02269
CSA International
8501 East Pleasant Valley Road
Cleveland, OH 44131-5575

- A 120 volt, 60 Hz., AC only, 15-amp, fused electrical circuit is required.
- If the house has aluminum wiring, follow the procedure below:
  1. Connect a section of solid copper wire to the pigtail leads.
  2. Connect the aluminum wiring to the added section of copper wire using special co nectors and/or tools designed and UL listed for joining copper to aluminum.

Follow the electrical connector manufacturer's recommended procedure. Aluminum/copper connection must conform with local codes and industry accepted wiring practices.

- Wire sizes and connections must conform with the rating of the appliance as specified on the model/serial rating plate.
  The model/serial plate is located on the left side of the range hood.
- Wire sizes must conform to the requirements of the National Electrical Code, ANSI/NFPA 70 (la est edition), or CSA Standards C22. 1-94, Canad an Electrical Code, Part 1 and C22.2 No. 0-M91 (latest edition) and all local codes and ordinances.

LOCATION REQUIREMENTS

IMPORTANT

Observe all governing codes and ordinances.

- It is the installer's responsibility to comply with installation clearances specified on the model/serial rating plate. The model/serial rating plate is located inside the range hood on the left side (See page 2 for location). Range hood location should be away from strong draft areas, such as windows, doors and strong heating vents.
- Cabinet opening dimensions that are shown must be used. Given dimensions provide minimum clearance. Consult the cooktop/range manufacturer installation instructions before making any cutouts.
- Grounded electrical outlet is required. See "Electrical Requirements" section.
- All openings in ceiling and wall where canopy hood will be installed must be sealed.

For Mobile Home Installations

The installation of this range hood must conform to the Manufactured Home Construction Safety Standards, Title 24 CFR, Part 328 (formerly the Federal Standard for Mobile Home Construction and Safety, Title 24, HUD, Part 280) or when such standard is not applicable, the standard for Manufactured Home Installation 1982 (Manufactured Home Sites, Communities and Setups) ANSI A225.1/NFPA 501A, or latest edition, or with local codes.

Cabinet Dimensions

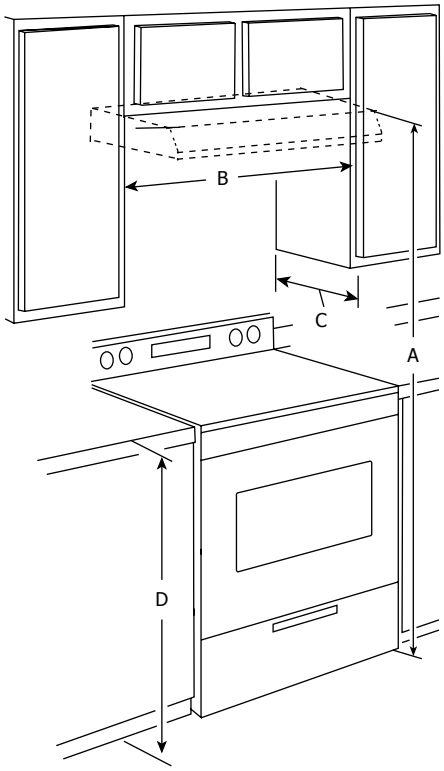

A. 66" (167 cm) suggested min. - top of range hood to floor.
B. 30" (76.2 cm) min. cabinet opening width for 30" (76.2 cm) models and 36" (91.4 cm) min. cabinet width for 36" (91.4 cm) models.
C. 13" (33.0 cm) cabinet depth
D. 36" (91.4 cm) base cabinet height

PRODUCT DIMENSIONS

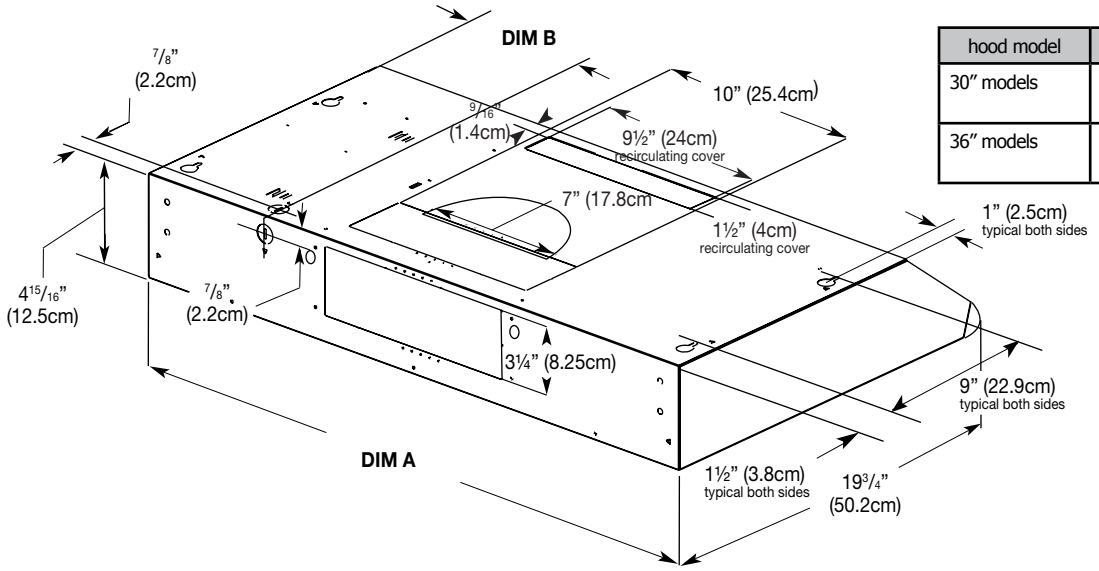

hood model	Dim A	Dim B
30" models	30" (76.2 cm)	6 9/16" (16.7 cm)
36" models	36" (91.44 cm)	9½" (24.3 cm)

- Vent system must terminate to the outdoors.
- Do not terminate the vent system into an attic or other enclosed area.
- Do not use a 4″ (10.2 cm) laundry-type wall cap.
- Use a 3¼″ x 10″ (8.3 x 25.4 cm) rectangular or 7″ (17.8 cm) round metal vent. Rigid metal vent is recommended. Plastic or metal foil vent is not recommended.
- The length of vent system and number of elbows should be kept to a minimum to provide efficient performance.

For the most efficient and quiet operation:
- Use no more than three 90° elbows.
- Make sure there is a minimum of 24″ (61 cm) of straight vent between the elbows if more than 1 elbow is used.
- Do not install 2 elbows together.
- Use clamps or duct tape to seal all joints in the vent system.
- The vent system at exit must have a cold air damper.
- Use caulking to seal exterior wall or roof opening around the cap.
- Best performances are reached with straight piping, without elbows and using smooth pipe.
- Maximum recomended vent system length: 35 ft (10.7m).

Cold Weather Installations
An additional back draft damper should be installed to minimize backward cold air flow and a thermal break should be installed to minimize conduction of outside temperatures as part of the vent system. The damper should be on the cold air side of the thermal break.
The break should be as close as possible to where the vent system enters the heated portion of the house.

Makeup Air
Local building codes may require the use of makeup air systems when using ventilation systems greater than specified CFM of air movement. The specified CFM varies from locale to locale. Consult your HVAC professional for specific requirements in your area.

Venting Methods
Vent system can terminate either through the roof or wall. Use 3¼″ x 10″ (8.3 x 25.4 cm) rectangular with a maximum vent length of 35 ft (10.7 m) or 7″ (17.8 cm) round vent with a maximum length of 50 ft (15.2 m) for vent system.

NOTE

Flexible vent is not recommended. Flexible vent creates both back pressure and air turbulence that greatly reduce performance.

Roof Venting

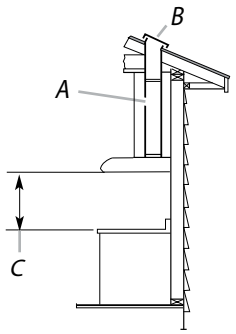

A. 3¼″ x 10″ (8.3 x 25.4 cm) rectangular or 7″ (17.8 cm) round vent through the roof. (purchased separately)
B. Roof cap with damper (purchased separately)
C. 24″ (61.0 cm) min. to 30″ (76.2cm) above the cooking surface

Wall Venting

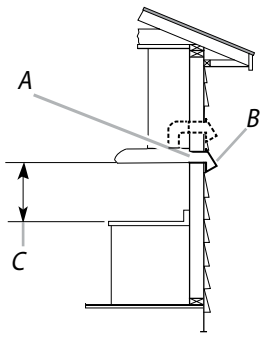

A. 3¼″ x 10″ (8.3 x 25.4 cm) rectangular or 7″ (17.8 cm) round vent through the wall or out the top (purchased separately)
B. Wall cap with damper (purchased separately)
C. 24″ (61.0 cm) min. to 30″ (76.2cm) above the cooking surface

Calculating Vent System Length
To calculate the length of the system you need, add the equivalent feet (meters) for each vent piece used in the system.

7″ (17.8 cm) Round Vent System

Vent Piece	Lenght	
90° elbow	5.0 ft (1.5 m)	
7″ (17.8 cm) wall cap	0.0 ft (0.0 m)	

Example Vent System

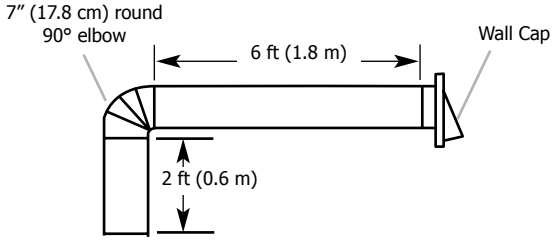

Maximum Recommended Length	= 50 ft (15.2 m)
1 - 90° elbow 8 ft (2.4 m) straight 1 - wall cap	= 5.0 ft (1.5 m) = 8.0 ft (2.4 m) = 0.0 ft (0.0 m)
Length of 7″ (17.8 cm) system	= 13.0 ft (3.9 m)

VENTING REQUIREMENTS

3¼″ x 10″ (8.3 cm x 25.4 cm) Vent System

Vent Piece	Lenght	
3¼″ x 10″ (8.3 cm x 25.4 cm) 90° elbow	5.0 ft (1.5 m)	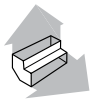
3¼″ x 10″ (8.3 cm x 25.4 cm) flat elbow	12.0 ft (3.7 m)	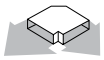
3¼″ x 10″ (8.3 cm x 25.4 cm) wall cap	0.0 ft (0.0 m)	

Example Vent System

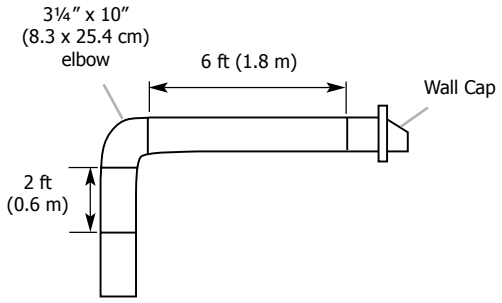

Maximum Recommended Length	= 35 ft (10.7 m)
1 - 90° elbow 8 ft (2.4 m) straight 1 - wall cap	= 5.0 ft (1.5 m) = 8.0 ft (2.4 m) = 0.0 ft (0.0 m)
Length of 3¼″ x 10″ = 13.0 ft (3.9 m)	= 13.0 ft (3.9 m)

PREPARE THE LOCATION

NOTE

Before making cutouts, make sure there is proper clearance within the ceiling or wall.

1. Disconnect power.
2. Select a flat surface for assembling the range hood. Place covering over that surface.
3. Lift the range hood and set it upside down onto covered surface.
4. If cabinet has recessed bottom, add wood filler strips on each side. Install screws to attach filler strips in locations shown.

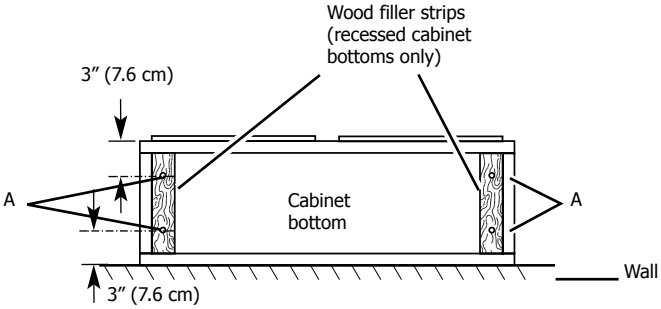

A. 4 flat head wood screws with washers and nuts

Determine Wiring Hole Location

1. Determine and clearly mark a vertical centerline on the wall and cabinet bottom.

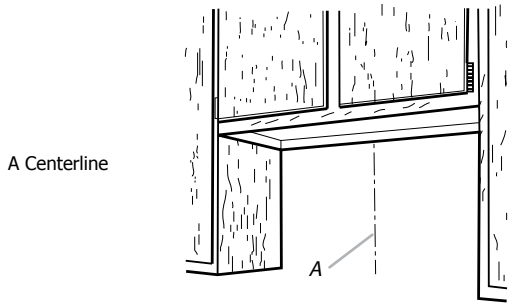

To wire through top:

2. Mark a line distance (A) from the right of the centerline on the underside of the cabinet. Mark the point on this line that is 7/8" (2.2 cm) from back wall. Drill a 1¼" (3.2 cm) diameter hole (B) through the cabinet at this point.

hood model	Dim A
30" & 36" models	8 3/8" (21.3 cm)

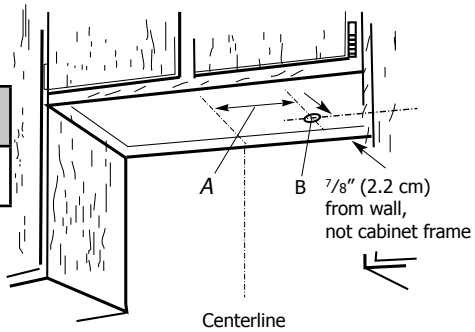

To wire through wall:

1. Mark a line distance (A) from the right of the centerline on the underside of the wall. Mark the point on this line that is 7/8" (2.2 cm) from the underside of the cabinet. Drill a 1¼" (3.2 cm) diameter hole (B) through the rear wall at this point.

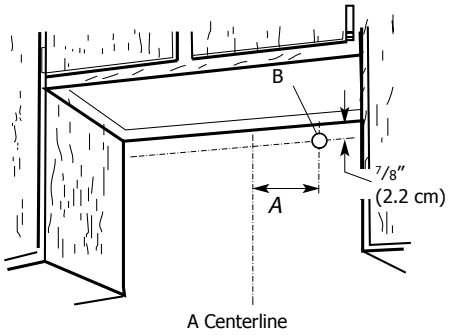

hood model	Dim A
30" & 36" models	8 3/8" (21.3 cm)

VENTING

Choose venting exhaust discharge from the various options listed - Style 1 - 4 that follows:

Style 1 - Recirculating Hood version

For this installation, go to "Install Range Hood (recirculating version)" on page 13.

Style 2 - Cut Openings for 3¼" x 10" (8.3 cm x 25.4 cm) Rectangular Vent System

Roof Venting

To make a 4" x 10½" (10.16 cm x 26.7 cm) rectangular cutout on the underside of cabinet top and bottom:

1. Mark lines ½" (1.3 cm) and 4¾" (12.1 cm) from the back wall on the centerline of the underside of cabinet.

2. Mark lines 5¼" (13.3 cm) to the right and left of the centerline on the underside of cabinet.

3. Use saber or keyhole saw to cut a rectangular opening for vent.

4. Repeat steps 1-3 for the underside of the top of the cabinet.

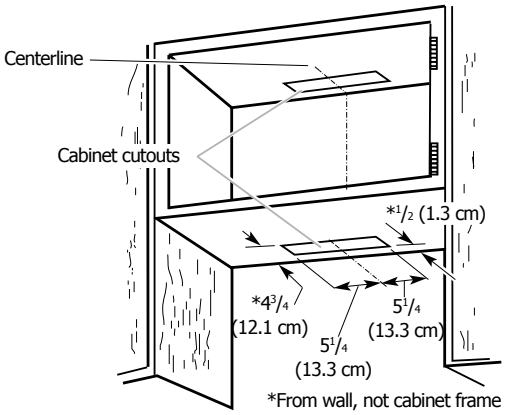

Wall Venting

To make a 3½" x 10½" (8.9 cm x 26.7 cm) rectangle in the wall:

1. Make 2 lines by measuring ⅜" (0.9 cm) and 3⅞" (9.8 cm) down from underside of cabinet and mark on the centerline on the back wall.

2. Mark lines 5¼" (13.3 cm) to the right and left of the centerline on the wall.

3. Use saber or keyhole saw to cut a rectangular opening in the wall for the vent.

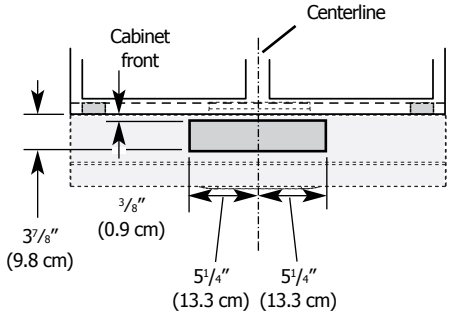

Style 3 - Cut Openings for 3¼" x 10" (8.3 x 25.4 cm) Rectangular Vent Transition to Round Vent

Roof Venting

To make a circular vent opening on the underside of the cabinet top:

1. Mark a centerline on the underside of the top of cabinet.
2. Mark a line 5" (12.7 cm) from the back wall on the underside of the top of cabinet.
3. Use a compass or a circle template to draw a circle with a diameter of 7½" (19 cm). Use saber or keyhole saw to cut the circular vent opening.

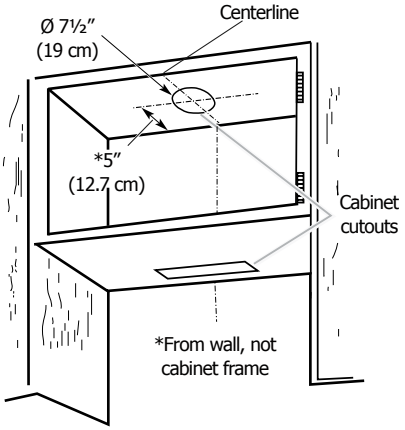

Style 4 - Cut Openings for 7" (17.8 cm) Round Vent to Round Vent Transition

Roof Venting

To make a circular vent opening on the underside of the cabinet top:

1. Mark a centerline on the underside of the top of cabinet.
2. Mark a line 5" (12.7 cm) from the back wall on the underside of the top of cabinet.
3. Use a compass or a circle template to draw a circle with a diameter of 7½" (19 cm).
   Use saber or keyhole saw to cut the circular vent opening.
4. Repeat steps 1-3 for the underside of the top of the cabinet.

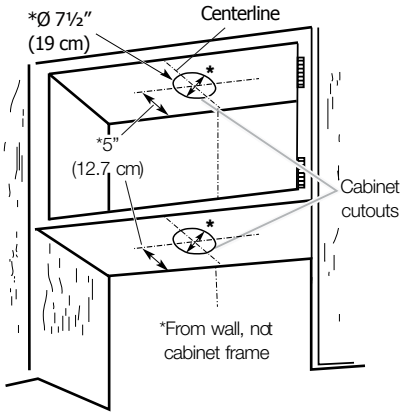

Install Vent System

1. Install vent through the vent opening in upper cabinet or wall. Complete venting system according to the selected venting method. See "Venting Requirements" section.
2. Use caulking to seal exterior wall or roof opening around the cap.

INSTALL RANGE HOOD (Ducted version)

NOTE

Your model includes a 3¼" x 10" (8.3 x 25.4 cm) rectangular transition and a 7" (17.8 cm) round vent mounting plate inside the package.

1. Detach the 3¼" x 10" (8.3 x 25.4 cm) rectangular and 7" (17.8 cm) round vent from the package.
   Unpack the one you have chosen and set the other in a safe place.

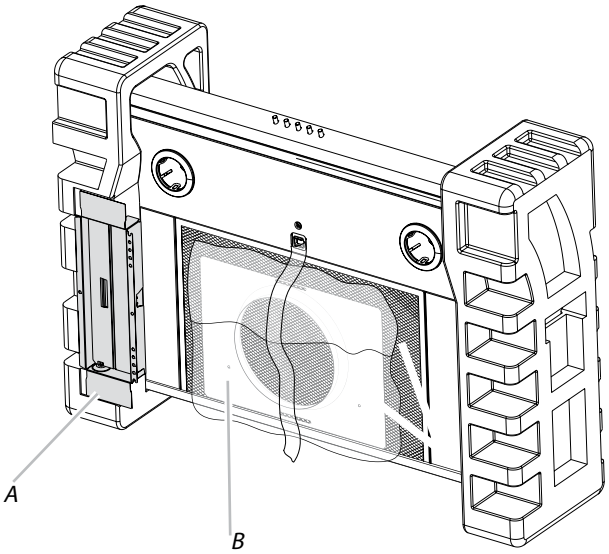

A. 3¼" x 10" (8.3 x 25.4 cm) rectangular vent damper
B. 7" (17.8 cm) round vent mounting plate

2. Lift the range hood up under cabinet and determine final location by centering beneath cabinet. Mark on the underside of cabinet the location of the 4 keyhole mounting slots on the range hood (See slot dimensions on page 6). Set range hood aside on a covered surface.

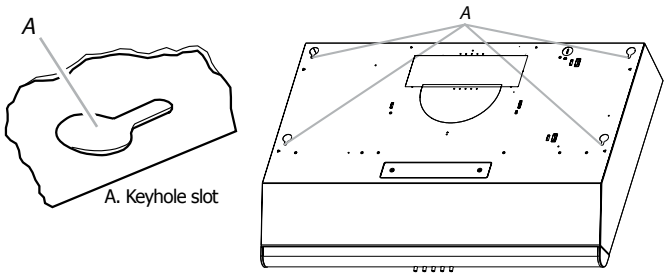

3. Use 1/8″ (3 mm) drill bit and drill 4 pilot holes as shown.
NOTE: Make the drill holes on the thin area of the slot.

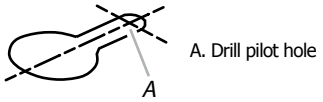

4. Install the 4 - .45 cm x 1.3 cm mounting screws in pilot holes. Leave about ¼″ (6.4 mm) space between screw heads and cabinet to slide range hood into place.

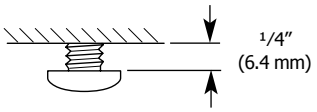

5. For roof installations, remove the top rectangular or round vent knockout depending on which vent system you desire to install. For wall installations, remove the rear rectangular vent knockout.

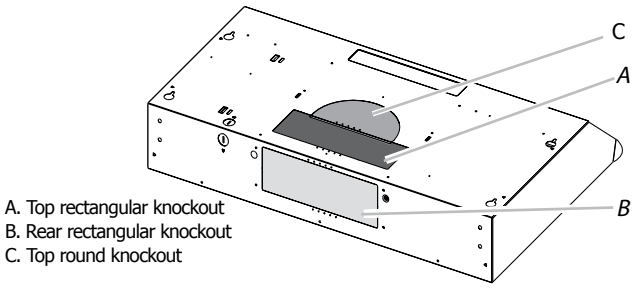

Vent Connector Installation
Install 7″ (17.8 cm) round vent mounting plate or 3¼″ x 10″ (8.3 x 25.4 cm) vent connector, depending on your vent system installation. Attach to range hood using the indicated screws provided in hardware kit.

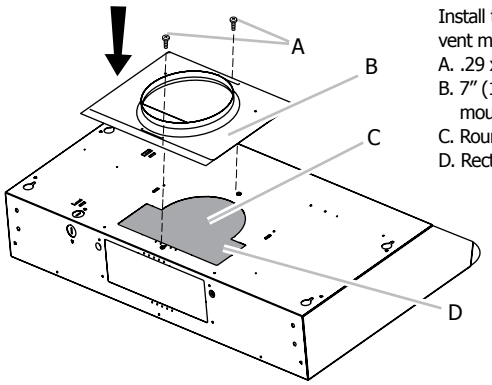

Install the 7″ (17.8 cm) round vent mounting plate
A. .29 x .65 cm screws
B. 7″ (17.8 cm) round vent mounting plate.
C. Round vent knockout
D. Rectangular vent knockout

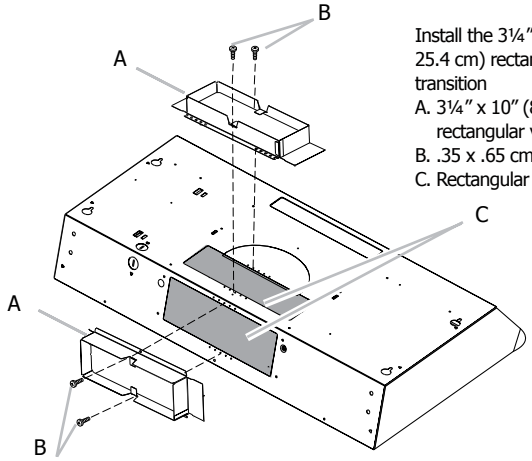

Install the 3¼″ x 10″ (8.3 x 25.4 cm) rectangular vent transition
A. 3¼″ x 10″ (8.3 x 25.4 cm) rectangular vent transition
B. .35 x .65 cm screws
C. Rectangular vent knockouts

NOTE

The 7″ (17.8 cm) round vent mounting plate or the 3¼″ x 10″ (8.3 x 25.4 cm) rectangular vent connector can be installed up to 1″ (2.5 cm) on either side of the hood center to accommodate off center ductwork.

- If a vent damper is installed with a wall cap with damper, check that they do not interfere with each other. Remove the vent connector damper flap if they interfere.

INSTALLING THE HOOD

Power Supply Cable Installation

1. For direct wire installations, run the home power supply cable according to the National Electric Code or CSA standards and local codes and ordinances. There must be enough wiring from the fused disconnect (or circuit breaker) box to make the connection in the hood electrical terminal box.

NOTE

Do not reconnect power until the installation is complete.
Before starting the installation, remove the grease filter, left and right side panels
Complete installation to reinstall the side panels.

2. Remove the screw from the terminal box cover. Remove terminal box cover and set aside.

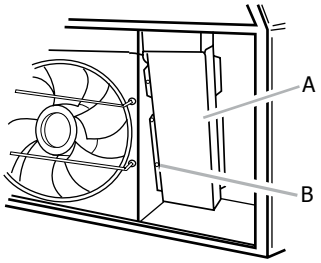

A. Terminal box cover
B. Screw

3. Remove the power supply knockout from the top or rear of the vent hood (depending on the incoming location of your home power supply cable) and install a UL listed or CSA approved ½" strain relief.

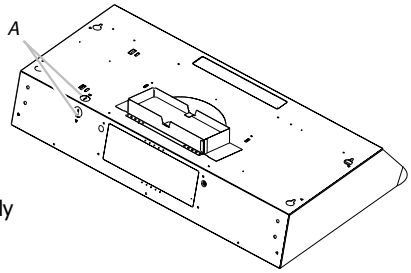

A. Power supply knockout

4. Using 2 or more people, lift the hood into final position. Feed enough electrical wire through the ½" UL listed or CSA approved strain relief to make connections in the terminal box. Tighten the strain relief screws.
5. Position the range hood so that the large end of the keyhole slots are over the mounting screws. Then push the hood toward the wall so that the screws are in the neck of the slots. Tighten the mounting screws, making sure the screws are in the narrow neck of slots.
6. Connect ventwork to hood. Seal joints with vent clamps or duct tape to make secure and airtight.
7. Check that back draft dampers work properly.

MAKE ELECTRICAL CONNECTION

WARNING

Electrical Shock Hazard
Disconnect power before servicing.
Replace all parts and panels before operating.
Failure to do so can result in death or electrical shock.

1. Disconnect power.

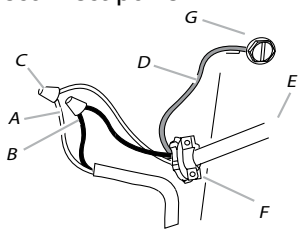

A.White wires
B. Black wires
C. UL listed wire connector
D. Green (or bare) ground wire
E. Home power supply cable
F. UL listed or CSA approved ½" strain relief
G. Green ground screw

2. Use UL listed wire connectors and connect white wires (A) together.
3. Use UL listed wire connectors and connect black wires (B) together.

WARNING

Fire Hazard
Electrically ground the blower. Use copper wire. Connect ground wire to green ground screw in terminal box. Failure to do so can result in death, fire, or electrical shock.

4. Connect green (or bare) ground wire from power supply to green ground screw in terminal box and securely tighten.
5. Install terminal box cover.
6. Install the 50W maximum halogen light bulb. See "Replacing the halogen lamp" in the "Range Hood Care" section.
7. Reconnect power.

Complete Installation

1. Replace the two bottom panels.
2. Replace grease filter if removed. See the "Range Hood Care" section.
3. Check the operation of the range hood fan and light. See "Range Hood Use" section.

If range hood does not operate, check to see whether a circuit breaker has tripped or a household fuse has blown. Disconnect power and check wiring connections.

NOTE

To get the most efficient use from your new range hood, read the "Range Hood Use" section.

INSTALL RANGE HOOD (Recirculating version)

1. Lift the range hood up under cabinet and determine final location by centering beneath cabinet. Mark on the underside of cabinet the location of the 4 keyhole mounting slots on the range hood (See slots dimensions on page 6). Set range hood aside on a covered surface.

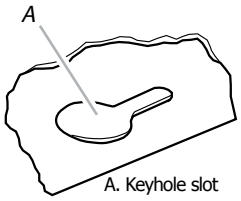

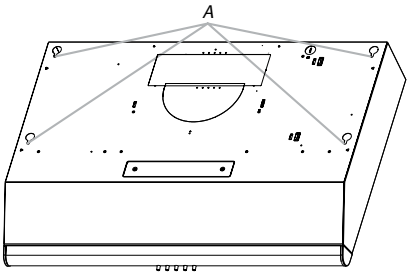

Use 1/8" (3 mm) drill bit and drill 4 pilot holes as shown.

NOTE: Make the drill holes on the thin area of the slot.

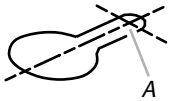

A. Drill pilot hole

2. Install the 4 - .45 cm x 1.3 cm mounting screws in pilot holes. Leave about ¼" (6.4 mm) space between screw heads and cabinet to slide range hood into place.

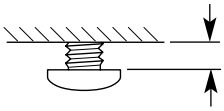

Power Supply Cable Installation

1. For direct wire installations, run the home power supply cable according to the National Electric Code or CSA standards and local codes and ordinances. There must be enough wiring from the fused disconnect (or circuit breaker) box to make the connection in the hood electrical terminal box.

NOTE

Do not reconnect power until the installation is complete.

2. Remove the screw from the terminal box cover. Remove terminal box cover and set aside.

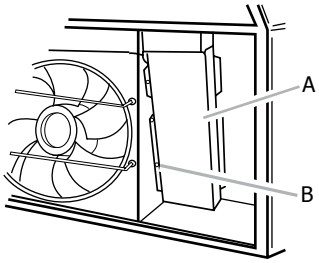

A. Terminal box cover
B. Screw

3. Remove the power supply knockout from the top or rear of the vent hood (depending on the incoming location of your home power supply cable) and install a UL listed or CSA approved ½" strain relief.

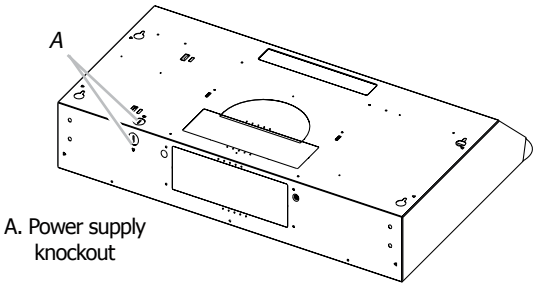

A. Power supply knockout

4. Using 2 or more people, lift the hood into final position. Feed enough electrical wire through the ½" UL listed or CSA approved strain relief to make connections in the terminal box. Tighten the strain relief screws.

5. Position the range hood so that the large end of the keyhole slots are over the mounting screws. Then push the hood toward the wall so that the screws are in the neck of the slots. Tighten the mounting screws, making sure the screws are in the narrow neck of slots.

Recirculation Vent Cover

For installations which are recirculating the air exhaust, **the recirculation vent cover must be removed.**

Remove the recirculating vent cover by removing the 2 mounting screws with a phillips screw-driver.

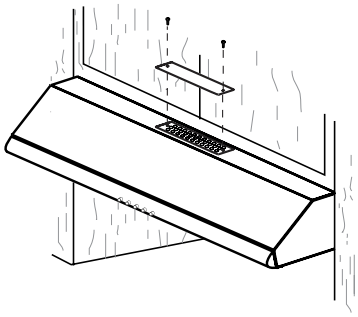

Part being removed

NOTE: For installations which are venting out the roof or wall, **the recirculating vent cover must remain in place.**
Do not remove as unit will not perform properly.

To complete the installation, go to "Make Electrical Connection" section on page 12.

RANGE HOOD USE

The range hood is designed to remove smoke and cooking vapors from the cooktop area. For best results, start the hood before cooking and allow it to operate several minutes after the cooking is complete to clear all smoke from the kitchen.
A Charcoal Filter Kit to remove odors is available. See page 15 for more information regarding this kit.
The hood controls are located on the front of the range hood.

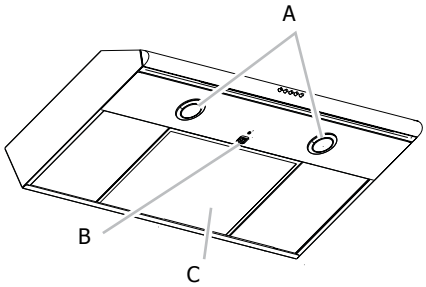

A. Halogen lights
C. Filter retainer
B. Grease filter

Range Hood Controls

Operating the light The Light On/Off button controls both lights. Press once for On and again for Off.	**Light On/Off**
Operating the blower The Fan On/Off button turn the blower on. Press the Fan On/Off button turn the blower off.	**Fan On/Off**
Speed The speed can be changed anytime during fan operation by pressing the desired blower speed button.	**1** **2** **3**

Cleaning

WARNING

To Reduce The Risk Of Fire Or Electrical shock disconnect from power supply before cleaning.

IMPORTANT

Clean the hood and grease filters frequently according to the following instructions. Replace grease filter before operating hood.

IMPORTANT

Exterior Surfaces
Do not use soap-filled scouring pads, abrasive cleaners, Cooktop Polishing Creme, steel wool, gritty washcloths or paper towels.
To avoid damage to the stainless steel, do not use cleaners that contain chlorine.

Cleaning Method:
- Use warm water with liquid detergent or all purpose cleaner and soft cloth to clean outside surfaces.
- Rinse with clean water and dry with soft, lint-free cloth.
- Use glass cleaner to remove fingerprints.
- For stainless steel finish rub in direction of grain to avoid scratching or damaging the surface.

NOTE: On stainless steel finish, clean in direction of stainless steel brush to avoid scratching or damaging the surface.

To clean or replace grease filter:

1. Remove phillips screw from the filter retainer.

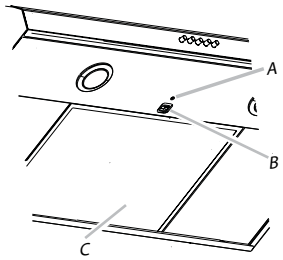

A. Screw
B. Grease filter retainer
C. Grease filter

2. To remove, pull the filter retainer toward the front of the range hood and pull down on the front edge of the filter.

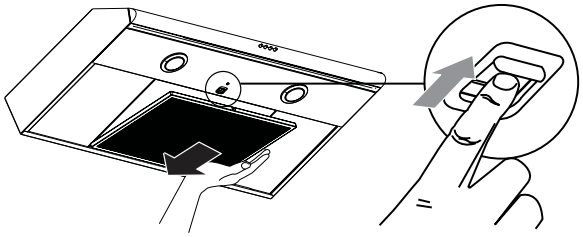

3. To clean grease filter, soak the filters in hot water using a mild detergent. Rinse well and shake to dry. Or place in upper rack of dishwasher to clean.

NOTE: Do not use ammonia. The aluminum on the grease filter will corrode and darken.

NOTE: You can use either dishwasher or hot detergent solution and rinse in clean water.

NOTE

The grease filter is dishwasher safe.
To avoid grease filter damage while cleaning, place filter into the dishwasher top rack for cleaning

Replacing the Halogen Lamp

Turn off the range hood and allow the halogen lamp to cool. To avoid damage or decreasing the life of the new lamp, do not touch lamp with bare fingers. Replace lamp, using tissue or wearing cotton gloves to handle lamp.
If new lamps do not operate, make sure the lamps are inserted correctly before calling service.

1. Disconnect power.
2. Push up on the lens and turn it counterclockwise.
3. Remove the lamp and replace it with a 120-volt, 50 watt maximum halogen lamp with a GU10 base. Turn it clockwise to lock it into place.
4. Repeat steps 2-3 for the other lamps if needed.
5. Reconnect power.

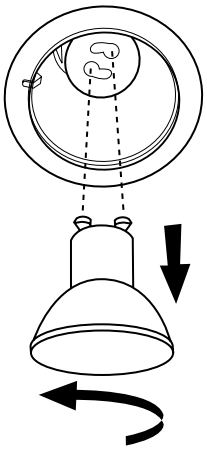

Charcoal / Grease Filter Accessory Kit

For recirculating vent hood, an optional charcoal filter is available. It purifyes the air and also removes odors. You can order this as part number 5304486303.
The charcoal filter is not washable. It should last up to 6 months with normal use.

Replace the charcoal filer regularly to maintain best vent hood performance.

TROUBLESHOOTING

Problem	Possible Causes	Solutions
After installation, the unit doesn't work.	1. The power line and the cable locking connector is not connecting properly.	1. Check the power connection with the unit is connected properly.
	2. The wires from the switches are disconnected or loose.	2. Make sure the wires on the switches are connected properly.
Light works, but motor is not turning.	1. The motor is defective, possible seized.	1. Change the motor.
	2. The thermally protected system detects if the motor is too hot to operate and shuts the motor down.	2. The motor will function properly after the thermally protected system cool down.
	4. The motor wire is not connected.	4. Make sure the motor wire is plugged into the molex connector.
The unit is vibrating.	1. The motor is not secure in place.	1. Tighten the motor in place.
	2. Damaged blower wheel.	2. Change the blower.
	3. The hood is not secured in place.	3. Check the installation of the hood.
The motor is working, but the lights are not.	1. Defective lamp.	1. Change the halogen lamp.
	2. The halogen lamp is loose.	2. Tighten the halogen lamp.
	3. The wires on the light switch are loose.	3. Make sure the wires on light switch are connected properly.
The hood is not venting out properly.	1. The hood might be hanging to high from the cook top.	1. Adjust the distance between the cook top and the bottom of the hood within 24" (61 cm) and 32" (76.2 cm) range.
	2. The wind from the opened windows or opened doors in the surrounding area are affecting the ventilation of the hood.	2. Close all the windows and doors to eliminate the outside wind flow.
	3. Blockage in the duct opening or duct work.	3. Remove all the blocking from the duct work or duct opening.
	4. The direction of duct opening is against the wind.	4. Adjust the duct opening direction.
	5. Using the wrong size of ducting.	5. Change the ducting to correct size.
Metal filter is vibrating.	1. Grease filter is loose.	1. Make sure filter retainer still works.
	2. Filter retainer does not freely move	2. Replace grease filter.

frigidaire.ca/right-to-repair/
Though Frigidaire makes every effort to make replacement parts, repair services and information necessary to maintain or repair our products available to consumers, parts, service and information are not guaranteed, pursuant to section 39 of the Consumer Protection Act, CQLR, c. P-40.1 and sections 79.18 to 79.20 of the Regulation respecting the application of the Consumer Protection Act, CQLR, c P-40.1, r. 3.

Warranty

Your appliance is covered by a one year limited warranty. For one year from your original date of purchase, Electrolux will repair or replace any parts of this appliance that prove to be defective in materials or workmanship when such appliance is installed, used, and maintained in accordance with the provided instructions. In addition, the glass cooktop or radiant surface element of your appliance (excluding built-in and free-standing range appliances) is covered by a two through five year limited warranty. During the 2nd through 5th years from your original date of purchase, Electrolux will provide a replacement glass cooktop or radiant surface element for your appliance which has proven to be defective in materials or workmanship when such appliance is installed, used, and maintained in accordance with the provided instructions.

Exclusions

1. Products with original serial numbers that have been removed, altered or cannot be readily determined.
2. Product that has been transferred from its original owner to another party or removed outside the USA or Canada.
3. Rust on the interior or exterior of the unit.
4. Products purchased "as-is" are not covered by this warranty.
5. Products used in a commercial setting.
6. Service calls which do not involve malfunction or defects in materials or workmanship, or for appliances not in ordinary household use or used other than in accordance with the provided instructions.
7. Service calls to correct the installation of your appliance or to instruct you how to use your appliance.
8. Expenses for making the appliance accessible for servicing, such as removal of trim, cupboards, shelves, etc., which are not a part of the appliance when it is shipped from the factory.
9. Service calls to repair or replace appliance light bulbs, air filters, water filters, other consumables, or knobs, handles, or other cosmetic parts.
10. Labor or in-home service costs during the additional limited warranty periods beyond the first year from your original date of purchase.
11. Pickup and delivery costs; your appliance is designed to be repaired in the home.
12. Surcharges including, but not limited to, any after hour, weekend, or holiday service calls, tolls, ferry trip charges, or mileage expense for service calls to remote areas, including the state of Alaska.
13. Damages to the finish of appliance or home incurred during transportation or installation, including but not limited to floors, cabinets, walls, etc.
14. Damages caused by: services performed by unauthorized service companies; use of parts other than genuine Electrolux parts or parts obtained from persons other than authorized service companies; or external causes such as abuse, misuse, inadequate power supply, accidents, fire or acts of God.

DISCLAIMER OF IMPLIED WARRANTIES; LIMITATION OF REMEDIES
CUSTOMER'S SOLE AND EXCLUSIVE REMEDY UNDER THIS LIMITED WARRANTY SHALL BE REPAIR OR REPLACEMENT AS PROVIDED HEREIN. CLAIMS BASED ON IMPLIED WARRANTIES, INCLUDING WARRANTIES OF MERCHANTABILITY OR FITNESS FOR A PARTICULAR PURPOSE, ARE LIMITED TO ONE YEAR OR THE SHORTEST PERIOD ALLOWED BY LAW, BUT NOT LESS THAN ONE YEAR. ELECTROLUX SHALL NOT BE LIABLE FOR CONSEQUENTIAL OR INCIDENTAL DAMAGES SUCH AS PROPERTY DAMAGE AND INCIDENTAL EXPENSES RESULTING FROM ANY BREACH OF THIS WRITTEN LIMITED WARRANTY OR ANY IMPLIED WARRANTY. SOME STATES AND PROVINCES DO NOT ALLOW THE EXCLUSION OR LIMITATION OF INCIDENTAL OR CONSEQUENTIAL DAMAGES, OR LIMITATIONS ON THE DURATION OF IMPLIED WARRANTIES, SO THESE LIMITATIONS OR EXCLUSIONS MAY NOT APPLY TO YOU. THIS WRITTEN WARRANTY GIVES YOU SPECIFIC LEGAL RIGHTS. YOU MAY ALSO HAVE OTHER RIGHTS THAT VARY FROM STATE TO STATE.

If You Need Service

Keep your receipt, delivery slip, or some other appropriate payment record to establish the warranty period should service be required. If service is performed, it is in your best interest to obtain and keep all receipts. Service under this warranty must be obtained by contacting Electrolux at the addresses or phone numbers below.

This warranty only applies in the USA, Puerto Rico and Canada. In the USA and Puerto Rico, your appliance is warranted by Electrolux Major Appliances North America, a division of Electrolux Home Products, Inc. In Canada, your appliance is warranted by Electrolux Canada Corp. Electrolux authorizes no person to change or add to any obligations under this warranty. Obligations for service and parts under this warranty must be performed by Electrolux or an authorized service company. Product features or specifications as described or illustrated are subject to change without notice.

USA
1.282.622.373
Electrolux Major Appliances
North America
10200 David Taylor Drive
Charlotte, NC 28262

Canada
1.800.265.8352
Electrolux Canada Corp.
5855 Terry Fox Way
Mississauga, Ontario, Canada
L5V 3E4

printed in Mexico

FRIGIDAIRE