User's Guide

for Dryers

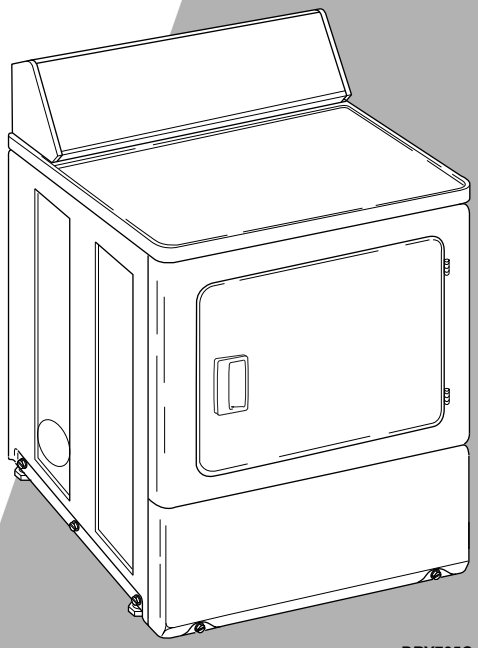

DRY735C_SVG

Original Instructions

Keep These Instructions for Future Reference.

CAUTION: Read the instructions before using the machine.

(If this machine changes ownership, this manual must accompany machine.)

Alliance™ Laundry Systems

www.speedqueen.com

Part No. D519197ENR3
September 2026

WARNING

WARNING

FOR YOUR SAFETY, the information in this manual must be followed to minimize the risk of fire or explosion or to prevent property damage, personal injury or death.

W033

WARNING

- **Do not store or use gasoline or other flammable vapors and liquids in the vicinity of this or any other appliance.**
- **WHAT TO DO IF YOU SMELL GAS:**
  - **Do not try to light any appliance.**
  - **Do not touch any electrical switch; do not use any phone in your building.**
  - **Clear the room, building or area of all occupants.**
  - **Immediately call your gas supplier from a neighbor's phone. Follow the gas supplier's instructions.**
  - **If you cannot reach your gas supplier, call the fire department.**
- **Installation and service must be performed by a qualified installer, service agency or the gas supplier.**

W052

EPA EST. NO.:101050-WI-1

© Copyright, Alliance Laundry Systems LLC -
DO NOT COPY or TRANSMIT

Register Your Product

Welcome to the Speed Queen family.

Thank you for your support of our truly commercial quality products. Please take a moment to register your product.

Benefits of registering your product:

- Provides verification of ownership
- Receive product notifications
- Simplifies warranty service, if needed
- Grants access to leave a product review
- Opt-in for latest offers and promotions

It's quick and easy to register.

Simply go to:

https://speedqueen.com/support/register-your-products/

Or scan:

© Copyright, Alliance Laundry Systems LLC -
DO NOT COPY or TRANSMIT

Safety Information

Explanation of Safety Instruction Messages

Precautionary statements (“DANGER,” “WARNING,” and “CAUTION”), followed by specific instructions, are found in this manual and on machine decals. These precautions are intended for the personal safety of the operator, user, servicer, and those maintaining the machine.

DANGER

Indicates an imminently hazardous situation that, if not avoided, will cause severe personal injury or death.

WARNING

Indicates a hazardous situation that, if not avoided, could cause severe personal injury or death.

CAUTION

Indicates a hazardous situation that, if not avoided, may cause minor or moderate personal injury or property damage.

Additional precautionary statements (“IMPORTANT” and “NOTE”) are followed by specific instructions.

IMPORTANT: The word “IMPORTANT” is used to inform the reader of specific procedures where minor machine damage will occur if the procedure is not followed.

NOTE: The word “NOTE” is used to communicate installation, operation, maintenance or servicing information that is important but not hazard related.

Important Safety Instructions

Save These Instructions

WARNING

To reduce the risk of fire, electric shock, serious injury or death to persons when using your dryer, follow these basic precautions:

W130

- Read all instructions before using the dryer.
- Refer to the GROUNDING INSTRUCTIONS in the INSTALLATION manual for the proper grounding of the dryer.
- Do not dry articles that have been previously cleaned in, soaked in, washed in, or spotted with gasoline, dry-cleaning solvents, other flammable or explosive substances as they give off vapors that could ignite or explode. Highly flammable substances commonly used in domestic environments including acetone, denatured alcohol, petrol/gasoline, kerosene, spot removers (some brands), turpentine, waxes and wax removers. This appliance shall not be used to dry off solvents or dry-cleaning fluids.
- Do not allow children to play on or in the unit. This appliance is not intended for use by young children or infirm persons without supervision. Young children should be supervised to ensure that they do not play with the appliance.
- Before the dryer is removed from service or discarded, remove the door to the drying compartment.
- Do not reach into the dryer if the cylinder is revolving.
- Do not install or store the dryer where it will be exposed to water and/or weather.
- Do not tamper with the controls.
- Do not repair or replace any part of the dryer, or attempt any servicing unless specifically recommended in the user-maintenance instructions or in published user-repair instructions that you understand and have the skills to carry out.
- Do not use fabric softeners or products to eliminate static unless recommended by the manufacturer of the fabric softener product.
- To reduce the risk of fire, DO NOT DRY plastics or articles containing foam rubber (also known as latex foam) or similarly textured rubberlike materials. Foam rubber materials can, when heated, produce fire by spontaneous combustion.
- Always clean the filter after every load. A layer of lint in the filter reduces drying efficiency and prolongs drying time.

© Copyright, Alliance Laundry Systems LLC -
DO NOT COPY or TRANSMIT

- Keep area around the exhaust opening and adjacent surrounding area free from the accumulation of lint, dust and dirt.
- The interior of the dryer and the exhaust duct should be cleaned periodically by qualified service personnel.
- This gas appliance contains or produces a chemical or chemicals which can cause death or serious illness and which are known to the State of California to cause cancer, birth defects, or other reproductive harm. To reduce the risk from substances int he fuel or from fuel combustion, make sure this appliance is installed, operated, and maintained according to the manufacturer's instructions.
- Dryer will not operate with the loading door open. DO NOT bypass the door safety switch by permitting the dryer to operate with the door open. The dryer will stop tumbling when the door is opened. Do not use the dryer if it does not stop tumbling when the door is opened. Do not use the dryer if it does not stop tumbling when the door is opened or starts tumbling without pressing or turning the START mechanism. Remove the dryer from use and call the service person.
- Do not put articles soiled with vegetable or cooking oil in the dryer, as these oils may not be removed during washing. Due to the remaining oil, the fabric may catch on fire by itself.
- To reduce the risk of fire, DO NOT put clothes which have traces of any flammable substances such as machine oil, flammable chemicals, thinner, etc. or anything containing wax or chemicals such as in mops and cleaning cloths, or anything dry-cleaned at home with dry-cleaning solvent in the dryer.
- Use the dryer only for its intended purpose, drying clothes.
- Always disconnect the electrical power to the dryer before attempting service. Disconnect the power cord by grasping the plug, not the cord.
- If supply cord is damaged, it must be replaced by a special cord or assembly available from the manufacturer or its service agent.
- Install this dryer according to the INSTALLATION INSTRUCTIONS. All connections for electrical power, earthing and gas supply must comply with local codes and be made by licensed personnel when required. Do not do it yourself unless you know how!
- Remove laundry immediately after the dryer stops.
- Always read and follow manufacturer's instructions on packages of laundry and cleaning aids. Heed all warnings or precautions. To reduce the risk of poisoning or chemical burns, keep them out of reach of children at all times (preferably in a locked cabinet).
- Do not tumble fiberglass curtains and draperies unless the label says it can be done. If they are dried, wipe out the cylinder with a damp cloth to remove particles of fiberglass.
- ALWAYS follow the fabric care instructions supplied by the garment manufacturer.
- Never operate the dryer with any guards and/or panels removed.
- DO NOT operate the dryer with missing or broken parts.
- DO NOT bypass any safety devices.
- Failure to install, maintain, and/or operate this machine according to the manufacturer's instructions may result in conditions which can produce bodily injury and/or property damage.

NOTE: The WARNING and IMPORTANT SAFETY INSTRUCTIONS appearing in this manual are not meant to cover all possible conditions and situations that may occur. Common sense, caution and care must be exercised when installing, maintaining, or operating the dryer.

Always contact your dealer, distributor, service agent or the manufacturer about any problems or conditions you do not understand.

© Copyright, Alliance Laundry Systems LLC -
DO NOT COPY or TRANSMIT

Table of Contents

Before Drying 8
- Energy Saving Tips 8
- Helps and Hints 8
- Sort 8
- Load 8

Operating Your Dryer 10
- Cycle Selection 10
  - Auto-Sensing 10
  - Sanitize 10
  - Time Dry 10
  - Pet Plus™ 10
  - Steam Refresh 11
- Auto-Dryness 11
- Fabric Selector 11
- Steam Boost 11
- End of Cycle Signal 11
- Status 11
- To Dry Clothes 12
- Optional Drying Rack 13

Maintenance 14
- Lubrication 14
- Care of Your Dryer 14
  - Exhaust System 14
- Lint Filter 14

Troubleshooting 15
- Normal Operating Sounds 16
- Warranty Repairs 17
- Contact Information 18

© Copyright 2026, Alliance Laundry Systems LLC
All rights reserved. No part of the contents of this book may be reproduced or transmitted in any form or by any means without the expressed written consent of the publisher.

Before Drying

Energy Saving Tips

- Make sure the lint filter is always clean.
- Do not overload the dryer.
- Do not overdry items.
- Remove items to be ironed while still damp.
- Large loads of similar fabrics dry the most efficiently. However, dry permanent press in smaller loads to prevent wrinkling.
- Use the correct cycle for the type of fabric being dried.
- Locate your dryer so the exhaust duct is as short and straight as possible.
- Do not open the door during the drying cycle.
- Plan to do your laundry on low humidity days; your clothes will dry faster.
- Dry multiple loads of clothes one right after another so dryer interior does not have to be reheated for each load.

Helps and Hints

WARNING

To reduce the risk of fire, explosion, serious injury or death, clothes which have traces of any flammable substances such as cooking oil, machine oil, flammable chemicals, thinner, etc. must not be put into the dryer.

W131

- The directions for installation and proper exhausting are given in the Installation Instructions which are included with the dryer.
- Static electricity may cause garments of synthetic fibers (as in lingerie) to cling together, especially if they are overdried. The use of a liquid fabric softener in the rinse water of the washer, or a fabric softener sheet in the dryer, will soften clothes and reduce static electricity.
- Do not wash or dry clothes that shed lint in the same load with permanent press or knit garments.
- Remove permanent press loads immediately after dryer stops.
- Follow the care labels on FLAME RETARDANT, SCOTCHGUARD™, etc., garments for proper washing and drying.
- If loads should be damp for ironing, use the Damp Dryness setting, in an Automatic cycle.

Sort

If you have correctly sorted the items for washing, they should be properly sorted for drying too.

1. Sort by color.
2. Separate lint shedding fabrics and lint receiving fabrics. Towels, flannels, chenille, cottons, rugs, etc., shed lint. Corduroys, knits (including socks), permanent press, and synthetics attract lint.
3. Separate no heat, low heat and high heat items.

In any kind of drying, lightweight fabrics will dry faster than heavyweight fabrics. If mixed loads are dried together (such as sheets and towels), remove the lighter weight fabrics when they are dry to prevent overdrying and wrinkling. The best method is to dry clothes which require the same time, temperature or dryness level in the same load.

Load

WARNING

Do not wash or dry items soiled with vegetable or cooking oils. Some oils may remain after washing and may cause the fabric to catch on fire by itself.

W527

- Do not overload your dryer. Bulk, not weight, determines the load size. If the dryer is overloaded, it could cause discoloration or permanent heat damage to the load.
- There should be space in the dryer for the clothes to tumble freely and help to reduce wrinkles.
- Large and small pieces together make up loads which will tumble well. Permanent press loads should be smaller to provide room for tumbling. Proper tumbling allows for fewer wrinkles.
- A load can be too small. Just a few small pieces will not tumble properly. They will take longer to dry and they may be wrinkled. For small loads, add a couple of large towels or non lint shedding items to aid in tumbling.
- The following illustrations show the ideal load sizes for fabrics. The average load will fill the cylinder one third to half full when wet.

© Copyright, Alliance Laundry Systems LLC -
DO NOT COPY or TRANSMIT

Cylinder with wet linens and cottons

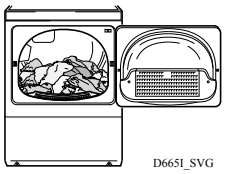

Cylinder with wet permanent press items

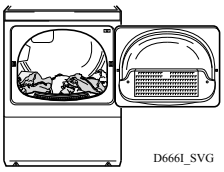

© Copyright, Alliance Laundry Systems LLC -
DO NOT COPY or TRANSMIT

Operating Your Dryer

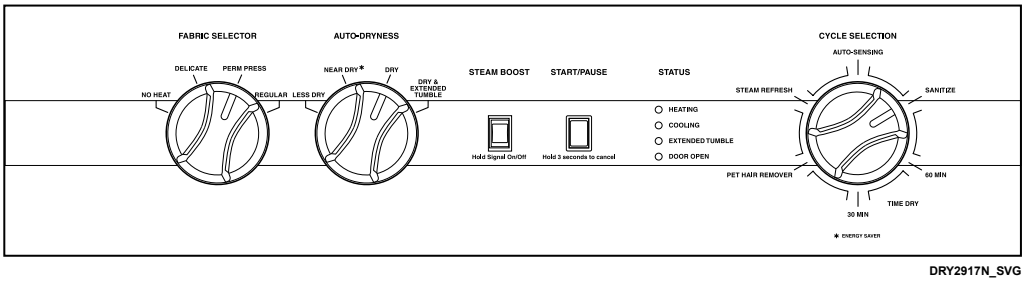

Figure 1

WARNING

To reduce the risk of fire, electric shock, serious injury or death to persons, read the Safety Information section before operating the dryer.

W520

Cycle Selection

The following cycle descriptions will help determine which cycle to choose depending on the type of laundry being dried.

NOTE: Always check fabric care label for proper care instructions.

Auto-Sensing

The Auto-Sensing drying cycle operation is determined by the type of cycle selected as well as the moisture sensing system, which can be set by changing the Auto-Dryness setting. Auto-Sensing cycles are Energy Saver cycles that help prevent over-drying.

When a wet load is put into the dryer it takes a certain amount of time to reach the desired dryness level. The time will vary with load size, type of fabric, amount of moisture in the load, air flow and the laundry room environment.

To use, set Cycle Selection to Auto-Sensing, the Fabric Selector to the desired cycle setting, and Auto-Dryness to the desired dryness level.

NOTE: To use the energy-saving setting, select the Auto-Sensing cycle, set the Auto-Dryness to Near Dry*, and set the Fabric Selector to Regular.

Sanitize

Sanitize is a 75-minute, high-heat cycle that sanitizes your laundry by killing 99.9% of common household bacteria*. It is recommended for medium size loads.

To use, set Cycle Selection to Sanitize and allow the cycle to complete uninterrupted. Auto-Dryness is ignored unless set to Dry & Extended Tumble.

NOTE: The Fabric Selector is ignored and will run at high heat.

The Extended Tumble and Steam options are available with the Sanitize Cycle.

NOTE: The Sanitize setting uses high heat and is not recommended for all fabric types. Check the fabric label for proper care instructions.

**Bacteria tested by an independent lab were Staphylococcus aureus, Pseudomonas aeruginosa, Klebsiella pneumoniae. Individual results may vary.*

Time Dry

Time Dry, will run at the selected temperature for a set number of minutes. Select the temperature based on the fabric care label. The time may need to be adjusted up if the items are still damp or down if the items are overdry.

To use, set Cycle Selection to Time Dry (30 minutes or 60 minutes) and set the Fabric Selector to the proper temperature for the type of load. The Auto-Dryness setting is ignored unless Dry & Extended tumble is selected.

Pet Plus™

The Pet Hair Remover cycle is used to remove pet hair from dry items. It is a set 10-minute cycle and can be used as a stand-alone refresh, or as pre-wash cycle before putting items in the washer.

NOTE: Clean lint filter before each use. Excessive hair build-up may impact results. A second Pet Hair Remover cycle may be necessary if there is a large amount of hair in the lint filter.

NOTE: Clean out dryer cylinder after using Pet Plus cycles. Pet items may cause stains or odors on subsequent loads.

© Copyright, Alliance Laundry Systems LLC -
DO NOT COPY or TRANSMIT

WARNING

This cycle is only intended for laundry items such as clothing, bedding, and pet items. It is not intended for pets or people.

W1073

Steam Refresh

Steam Refresh releases wrinkles and refreshes items. It is recommended for small loads of 1-4 items. The cycle applies a medium-temperature heat for 28 minutes to the load.

To use, set the Cycle Selection to Steam Refresh. Setting the Fabric Selector to Delicate, Perm Press or Regular initiates the 28 min, medium heat cycle. Auto-Dryness is ignored unless set to Dry & Extended Tumble.

IMPORTANT: Do not use dryer sheets when using steam cycles.

IMPORTANT: Do not run steam with no load to help prevent water from staining the cylinder.

NOTE: Do not overload machine for steam cycles. Overloading during a steam cycle may cause the load to have wet spots at the end of the cycle.

NOTE: Using steam on overly damp items may result in load not completely drying.

Auto-Dryness

Use the Auto-Dryness selections to select the dryness level.

Less Dry, which uses the least energy, will dry large loads and lightweight items, such as sheets and shirts, but might leave other items, such as denim and heavy bath towels, more damp.

Near Dry*, will stop the cycle when items are slightly damp. Certain fabric labels recommend removing items from the dryer before they are completely dry to help prevent shrinking and wrinkling.

Dry, will dry very small loads and some heavy items, such as blue jeans, but will overdry lightweight items, such as sheets and shirts. Overdrying can cause wrinkling, shrinking, excessive lint conditions, and will use more energy than necessary.

Dry & Extended Tumble will dry very small loads and some heavy items, such as blue jeans, but will overdry lightweight items, such as sheets and shirts. Overdrying can cause wrinkling, shrinking, excessive lint conditions, and will use more energy than necessary. The EXTENDED TUMBLE setting continues to tumble items at no heat after the cycle has completed. This prevents wrinkling when garments cannot be removed from the dryer immediately.

The Energy Saver settings, marked with an asterisk(*), show which settings will use the least energy and will leave items damp for easier ironing.

The Cooling period at the end of each cycle provides items a chance to tumble with no heat and cool down to room temperature. This prevents wrinkles from setting if items cannot be cared for immediately.

Over-drying can cause wrinkling, shrinking, excessive lint conditions, and will use more energy than necessary. To increase energy savings and to make sure loads are dried without overdrying, set your Auto-Sensing loads on Near Dry* or Less Dry. If items are damp or over-dry at the end of a cycle, increase or decrease the Dryness setting the next time these loads are dried. Remember the settings that work best to get ideal drying results.

Fabric Selector

The type of heat is determined by selecting the proper Fabric Selector option.

1. NO HEAT uses no heat, use on items that shrink easily or to fluff.
2. DELICATE uses low heat, use to dry delicate items.
3. PERM PRESS uses medium heat, use for permanent press items and synthetics.
4. REGULAR uses medium-high heat, use for sturdy items like play or work clothes.

Steam Boost

Steam Boost releases wrinkles and softens fabrics. It is available with the Auto-Sensing (Perm Press and Regular Fabric Selectors) and Sanitize Cycle Selections. When using Steam Boost, Auto-Dryness must be set to either Near Dry or Dry.

NOTE: The Steam Boost option is not available with the energy saving setting, which is the Auto-Sensing Cycle Selection, Regular Fabric Selector, and Near Dry* Auto-Dryness.

End of Cycle Signal

To turn the signal on or off, press and hold the STEAM BOOST button.

Status

The Status lights are lit during the cycle to show what part of the cycle is running.

1. The HEATING status light is lit to indicate that a heat portion of the cycle is currently operating.
2. The COOLING status light is lit during the cool-down portion of the cycle.
3. The EXTENDED TUMBLE status light is lit during the Dry & Extended Tumble cycle.
4. The DOOR OPEN status light is lit any time that the dryer door is open.

© Copyright, Alliance Laundry Systems LLC -
DO NOT COPY or TRANSMIT

To Dry Clothes

This appliance shall not be used to dry off solvents or dry cleaning fluids. Fabric softeners, or similar products, should be used as specified by the fabric softener instructions.

IMPORTANT: Refer to the INSTALLATION INSTRUCTIONS before using dryer.

IMPORTANT: Before using dryer for the first time, use an all-purpose cleaner or a detergent and water solution and a damp cloth to remove shipping dust from inside of dryer drum.

NOTE: This appliance is designed for repeated normal operation according to operating instructions.

1. Sort items into separate loads.

NOTE: Remove all objects from pockets such as lighters and matches.

IMPORTANT: Oil affected items can ignite spontaneously, especially when exposed to heat sources such as in a tumble dryer. The items become warm, causing an oxidation reaction in the oil. Oxidation creates heat. If the heat cannot escape, the items can become hot enough to catch fire. Piling, stacking or storing oil affected items can prevent heat from escaping and so create a fire hazard.

NOTE: Remove all sharp objects from laundry to avoid tears and rips to items during normal machine operation.

2. Clean lint filter (if using lint filter guard, remove first).

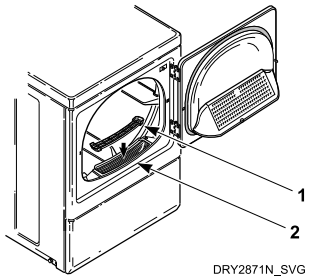

1. *Lint Filter Guard (optional)*
2. *Lint Filter*

Figure 2

WARNING

To reduce the risk of fire and risk of lint collecting in exhaust duct, do not operate dryer without lint filter in place.

W771

NOTE: The Lint Filter Guard is an optional accessory to help prevent items from falling in the lint filter.

3. Load dryer half full with laundry (18 pounds [8.2 kg] maximum dry clothes load). Add fabric softener sheet, if desired, except with steam cycles.

WARNING

To reduce the risk of fire, explosion, serious injury or death, clothes which have traces of any flammable substances such as cooking oil, machine oil, flammable chemicals, thinner, etc. must not be put into the dryer.

W131

NOTE: To avoid damage to dryer, do not use more than one fabric softener sheet per load.

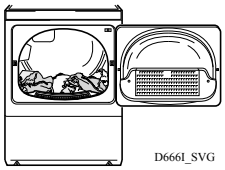

4. Close loading door. Dryer will not operate with the door open.

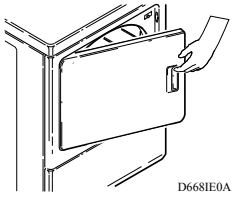

5. Select the desired cycle setting under Cycle Selection. These settings control the drying time.

The ENERGY SAVER settings, marked with an asterisk (*), show which dryer settings will use the least energy.

6. Select Fabric Selector based on load type. Follow garment manufacturer's care labels for recommended temperature settings.
7. Select the dryness level under Auto-Dryness.
8. Push start button to start dryer.

NOTE: To stop dryer at any time, open the door or press the Start/Pause button. To restart dryer, close door and press the Start/Pause button again.

9. Remove laundry immediately after dryer stops at end of cycle.

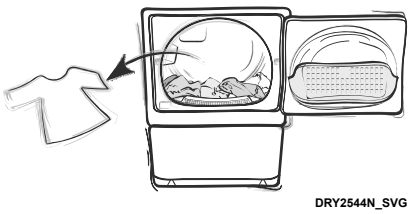

© Copyright, Alliance Laundry Systems LLC -
DO NOT COPY or TRANSMIT

Optional Drying Rack

A drying rack, Part No. D512082, is available at extra cost through your Factory Authorized Service Center.

The drying rack can be used in time dry cycles only for no-tumble drying of articles such as tennis shoes, sweaters, stuffed toys or other delicate items.

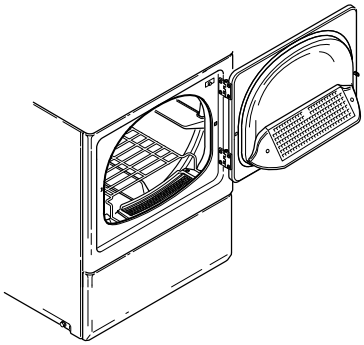

© Copyright, Alliance Laundry Systems LLC -
DO NOT COPY or TRANSMIT

Maintenance

Lubrication

All moving parts are sealed in a permanent supply of lubricant or are equipped with oilless bearings. Additional lubrication will not be necessary.

Care of Your Dryer

WARNING

To reduce the risk of an electric shock, serious injury or death, disconnect the electrical service to the dryer before cleaning the interior.

W132

Dryer Interior

Wipe the surfaces using a soft cloth and household cleaner or a non-abrasive paste of powdered laundry detergent and hot water, followed by a short heat cycle with a load of rags.

To remove crayon or ball point ink off the dryer drum, put the heat on high and use old rags in the dryer to absorb the crayon or ink. If unsuccessful, contact the appliance dealer. DO NOT use any chemicals in the dryer.

IMPORTANT: The use of chlorine bleach for removing any discolorations should be avoided because bleach could damage the finish.

Cabinet

Wipe the dryer cabinet as needed. If detergent, bleach or other washing products have been spilled on the dryer, wipe immediately. Some products will cause permanent damage if spilled on the cabinet.

Control Panel

Use only a damp or sudsy cloth for cleaning the control panel. Some spray pretreat products may harm the finish on the control panel. DO NOT use products that contain alcohol on the control panel.

Exhaust System

WARNING

To reduce the risk of electric shock, disconnect the electrical service to the dryer before cleaning.

W043

WARNING

Any disassembly requiring the use of tools must be performed by a suitably qualified service person.

W299

The exhaust duct should be inspected after one year of use and cleaned if necessary by a qualified service person to remove any lint build-up. Inspect and clean exhaust duct every one to two years as required thereafter.

Every two years a qualified service person should remove all front panels and vacuum the inside of the dryer

NOTE: This recommended maintenance is not covered under the terms of the warranty.

The weather hood should be checked frequently to make sure the dampers move freely, dampers are not pushed in and that nothing has been set against them.

Keep dryer area clear and free from combustible materials, gasoline and other flammable vapors and liquids.

Do not obstruct the flow of combustion and ventilation air.

NOTE: Verify proper operation after servicing.

Lint Filter

The lint filter is located at the front of the dryer in the lower part of the door opening.

CLEAN THE LINT FILTER BEFORE DRYING EACH LOAD. (If using optional lint filter guard, remove first).

Annually remove lint filter and screw to vacuum the duct under it.

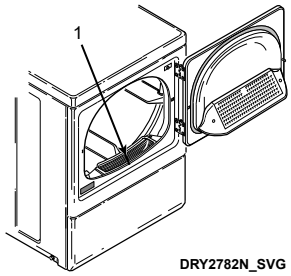

1. Lint Filter

Figure 3

© Copyright, Alliance Laundry Systems LLC -
DO NOT COPY or TRANSMIT

Troubleshooting

Try these troubleshooting tips before making a service call.
They may save you time and money.

Dryer Symptom	Possible Cause/Solution
Dryer won't start	• Make sure the power cord is plugged all the way into the electrical outlet. • Make sure loading door is closed. • Push start button to start dryer. • Make sure the laundry room fuse(s) isn't blown or loose, or circuit breakers aren't open. • The dryer itself does not have an electrical fuse. An electric dryer has an electrical circuit with two fuses. • Check if motor overload protector has cycled. Wait 10 minutes and try again.
Dryer won't heat	• Electric dryers only – Some homes may have two fuses or circuit breakers for an electric dryer; both fuses or circuit breakers should be checked. Make sure the laundry room fuse(s) isn't blown or loose, or that the circuit breakers aren't open. • Gas dryer only – Make sure equipment and main gas line valve is turned on. • Check exhaust duct to outside to see if it is kinked, blocked or needs cleaning. • Check weather hood to make sure flapper moves freely, has not been pushed in or has not been blocked.
Dryer doesn't dry clothes satisfactorily	• Check exhaust duct to outside to see if it is kinked, blocked or needs cleaning. • Check weather hood to make sure flapper moves freely, has not been pushed in or has not been blocked. • Auto-Sensing cycle – Adjust Dryness selection. • Time Dry cycle - Allow more or less time. • Clean the lint filter. • Make sure the load isn't too small. Small loads may not tumble properly or dry evenly. • The Auto-Sensing cycles are not suggested to be used for small loads such as two small towels. For those loads, use the Time Dry cycle. • Check load being dried. Heavy items dried with lightweight items will not dry as quickly as the rest of the load. • Refer to Sort section for proper sorting information.
Dryer is noisy	• Check dryer for foreign objects (nails, coins, bobby pins, metal, plastic toys, etc.). Remove items from dryer. • Make sure dryer is level. Uneven leveling can cause vibration.

continues...

© Copyright, Alliance Laundry Systems LLC -
DO NOT COPY or TRANSMIT

Dryer Symptom	Possible Cause/Solution
Clothes are too wrinkled	• Check heat setting. Overdrying can cause wrinkling. • Check load size. Large loads may not tumble properly and may cause wrinkling.
Clothes have odor	• Check room for odors before drying clothes. Any odor (fried foods, paint, varnish, cleaners, burning wood, etc.) will transfer to clothing as the dryer draws air from the room. • Ventilate room before drying clothes.
Cycle advances too slowly	• When in an Auto-Sensing cycle, the time it takes depends on the type and size of the load being dried. When clothing has more moisture, the cycle takes longer than when the clothes are more dry.
Water Leaks	• Check that inlet hose is properly installed on the faucet and the dryer's steam valve. • Check the condition of the inlet hose. Replace inlet hose every five years. • Check laundry room plumbing. • Check house water pressure. In cases of extremely low water pressure, leaking may occur.

Normal Operating Sounds

The following normal operating sounds may be heard while the machine is running a cycle.

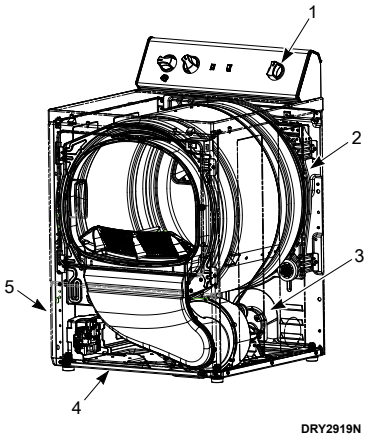

1. Ticking of Timer
2. Rhythmic Thumping (Caused by Cylinder Seam Contacting Drum Roller)
3. Thumping Noise from Belt
4. Rush of Air (Gas Models)
5. Clicks from Relays on Output Board

Figure 4

© Copyright, Alliance Laundry Systems LLC -
DO NOT COPY or TRANSMIT

Warranty Repairs

If your appliance needs repair, you can locate an authorized service provider directly from our Support page at www.speedqueen.com.

Before scheduling service, please consult Limited Warranty for full terms. As a reminder, the following items are not covered by the limited warranty and, if a service technician is called, you will be responsible for payment of the service call.

- Plugged or restricted venting
- Kinked venting
- Cleaning lint from within the dryer
- Home electrical issues
- Home gas issues
- Foreign objects found inside the dryer
- Instruction on how to use machine
- Issues related to improper installation

As detailed in the Limited Warranty, if the unit is operated in a multiple-user setting or commercial application, the unit's limited warranty is three (3) years parts only. Labor coverage is not included in this warranty.

© Copyright, Alliance Laundry Systems LLC -
DO NOT COPY or TRANSMIT

Contact Information

If you have any questions or need assistance with your appliance, please visit us online at *www.speedqueen.com*. From our website you can:

- Register your appliance
- Find manuals and other product literature
- FAQs and troubleshooting
- How-to videos
- Verify your appliance warranty
- Request repair or locate authorized service providers near you
- Locate replacement parts

If additional support is needed, contact us using one of the following methods:

Phone: (920) 748-3121 or (800) 552-5475

Contact Us Form: *www.speedqueen.com/contact/*

Mail: Speed Queen
Shepard Street
P.O. Box 990
Ripon, WI 54971-0990

When contacting us, please provide the following information:

- Date Purchased
- Model Number
- Serial Number

The Model and Serial Numbers are located on the serial plate. The serial plate will be in the location shown.

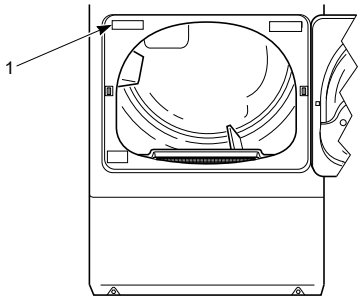

DRY2527N_SVG

1. Serial Plate

WARNING

To reduce the risk of serious injury or death, DO NOT repair or replace any part of the unit or attempt any servicing unless specifically recommended in the user-maintenance instructions or in published user-repair instructions that you understand and have the skills to carry out.

W329

© Copyright, Alliance Laundry Systems LLC -
DO NOT COPY or TRANSMIT