24" Compact Washer

300 Series Washer – WGA14400UC

WGA14400UC
White

The 300 series washer is a perfect companion piece to the 300 series dryer, matching in quality, performance and design.

Features & Benefits

SpeedPerfect® delivers a faster wash, perfect for small loads.

EcoSilence™ motor delivers quiet, efficient & long lasting performance.

At 2.2 cu. ft., Bosch washers are compact in size without sacrificing capacity so you can fit a variety of loads.

General Properties	
Tub material	Stainless Steel
Maximum spin speed	1,400 rpm
Interior light	No
Leak protection systems	Reinforced Hose
Internal water heater	Yes
Stackable	Yes with Stacking Kit Accessory
Silence level – washing	52 dBA
Silence level – spinning	72 dBA
Programs (No.), [Special]	(15), [Allergen, Jeans, Heavy Duty]
Options (No.), [Special]	(6), [SpeedPerfect®, PreWash]
Energy consumption	84 kWh/yr
Water consumption	2,288 gal/yr
ENERGY STAR® certified	Yes
Capacity	
Capacity	2.2 cu. ft.
Design Elements	
Door ring	White
Control type	Touch
Dial	White
Bosch logo on door glass	Yes
Technical Details	
Watts	2,520 W
Circuit breaker	15 A*
Volts	208/220-240 V
Current	10.5 A
Frequency	60 Hz
Power Cord (included) [Type]	(Yes) [240V; NEMA 6-15, 3-prong]
Power cord length	63" (Full Length)
Drain hose length	57" (Full Length)
Inlet hose length	48" (Full Length)
Door hinge	Left Side (Not Reversible)

Dimensions & Weight	
Overall appliance dimensions (HxWxD)	33 1/4" x 23 1/2" x 24 1/4"
Net weight	163 lbs
Minimum stack height	67 3/4"

ADA compliance
- Meets ADA height and access requirements *when installed on pedestal.*
- Meets ADA operable parts requirements for controls and detergent dispenser.

Accessories – Optional

Dryer Stacking Kits

WTZ11400UC
Kit w/Shelf

WTZ20410UC
Kit w/out Shelf

WTZSB30UC
Kit w/Brackets

Necessary only when stacking a matching Bosch dryer on top of washer. Shown here for reference only.

Power Adapters

WTZPA20UC
4-Prong

WTZPA30US
3-Prong

Matching Bosch Dryers are supplied with WTZPA20UC adapter to fit a standard 4-Prong, 30A, Dryer receptacle (NEMA 14-30R) to power both Bosch Washers and Dryers.

Note: – 3-Prong Adapter may be ordered directly from Bosch (not supplied with Washer or Dryer).
– Use of two individual NEMA 6-15R or 6-20R receptacles/circuits may be used as alternative means to power Washer and Dryer.

WMZPW50W
Washer Pedestal

*Stated circuit breaker size is if the appliance is plugged into an individual 240/208V, 15A minimum branch circuit.

Accessories: To purchase Bosch accessories, cleaners & parts please visit www.bosch-home.com/us/store or call 1-800-944-2904 (Mon to Fri 5 am to 6 pm PST, Sat 6 am to 3 pm PST).

Notes: All height, width and depth dimensions are shown in inches. BSH reserves the absolute and unrestricted right to change product materials and specifications, at any time, without notice. Consult the product's installation instructions for final dimensional data and other details prior to making cutout.

Warranties: Please see Use & Care manual or Bosch website for statement of limited warranty.

For more information on our entire line of products, go to www.bosch-home.com/us or call 1-800-944-2904

© BSH Home Appliances Corporation. All rights reserved. Bosch is a registered trademark of Robert Bosch GmbH.

24" Compact Washer

300 Series Washer – WGA14400UC

Installation Details

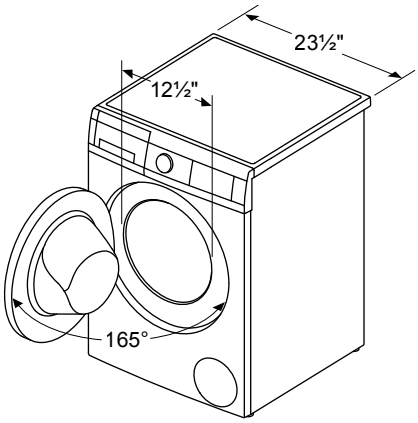

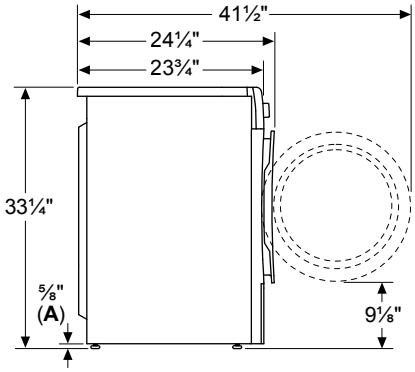

A: ⅝" nominal; ½" minimum; 1" maximum

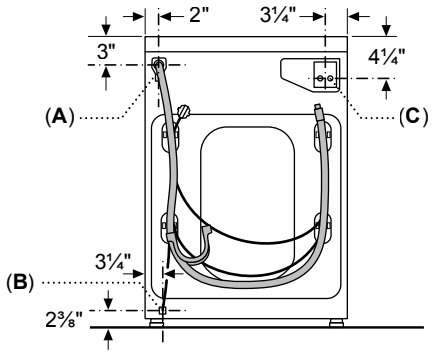

A: Drain exit
B: Power cord exit
C: Supply hoses (Hot and Cold)

measurements in inches

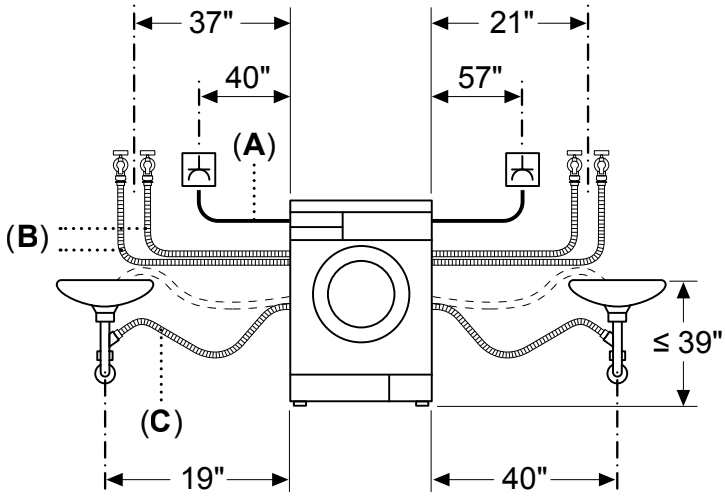

Electrical Receptacle
A: Power Cord
B: Supply Hoses
C: Drain Hose

PFAS

Accessories: To purchase Bosch accessories, cleaners & parts please visit www.bosch-home.com/us/store or call 1-800-944-2904 (Mon to Fri 5 am to 6 pm PST, Sat 6 am to 3 pm PST).

Notes: All height, width and depth dimensions are shown in inches. BSH reserves the absolute and unrestricted right to change product materials and specifications, at any time, without notice. Consult the product's installation instructions for final dimensional data and other details prior to making cutout.

Warranties: Please see Use & Care manual or Bosch website for statement of limited warranty.

For more information on our entire line of products, go to www.bosch-home.com/us or call 1-800-944-2904

© BSH Home Appliances Corporation. All rights reserved. Bosch is a registered trademark of Robert Bosch GmbH.

24" Compact Washer

300 Series Washer – WGA14400UC

Installation Details

Reach of Power cords + Adapter (Not to Scale)

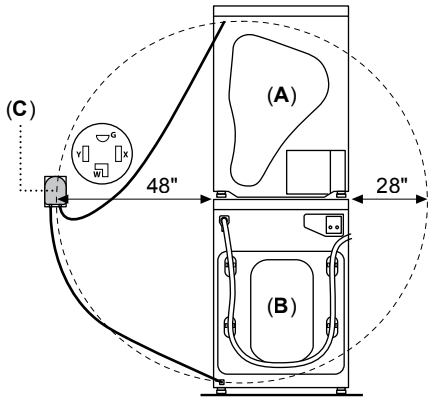

A: Dryer
B: Washer
C: Power Adapter
All references to NEMA 14-30R Dryer receptacles in this document have the orientation with the ground pin up.

Use of two individual NEMA 6-15R or 6-20R receptacles may be used as alternative means to power Washer and Dryer.

Dimensions reflect use of stacking kits.

Optional Pedestal

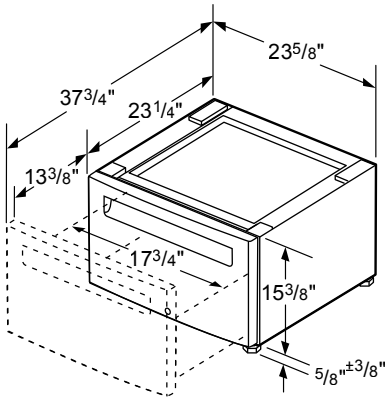

Guidance for location of Dryer receptacle and Water taps to minimize depth allowance (Not to Scale)

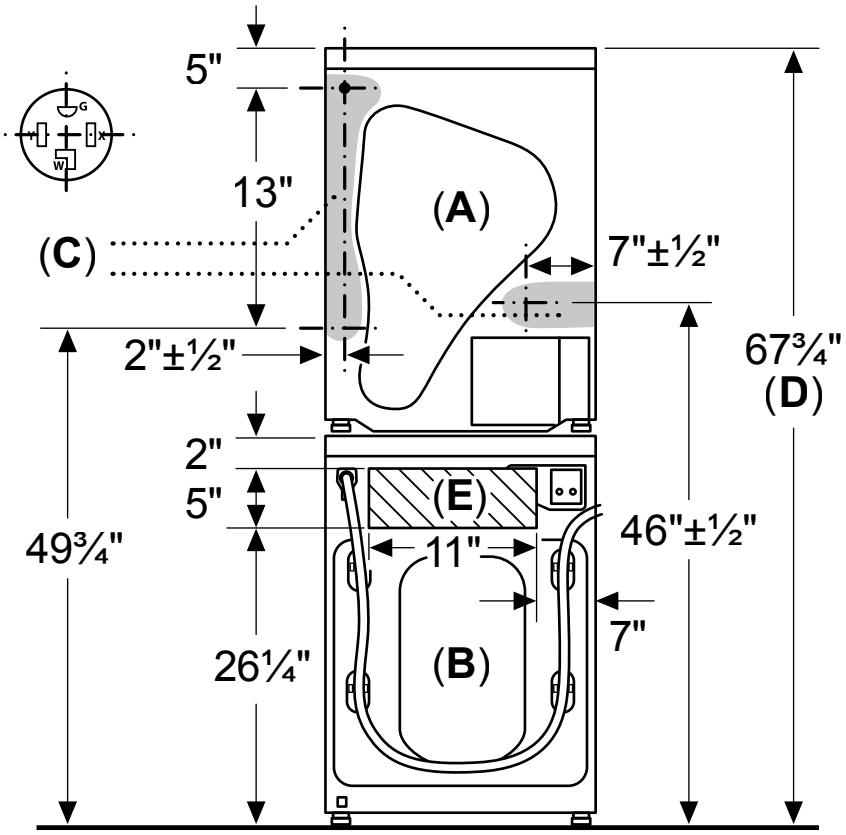

A: Dryer
B: Washer
C: Axis lines, in shaded areas, indicate Center Line of home's Dryer receptacle for minimal depth allowance if located entirely behind appliances.
D: Minimum Stack Height (with Stacking Kit)
E: Hatched area - indicates location for home's Hot and Cold water taps/outlets for minimal depth if located entirely behind appliances.

Installer / Customer is responsible for fit, function, maintenance and safety of utility installation.

measurements in inches

Accessories: To purchase Bosch accessories, cleaners & parts please visit www.bosch-home.com/us/store or call 1-800-944-2904 (Mon to Fri 5 am to 6 pm PST, Sat 6 am to 3 pm PST).

Notes: All height, width and depth dimensions are shown in inches. BSH reserves the absolute and unrestricted right to change product materials and specifications, at any time, without notice. Consult the product's installation instructions for final dimensional data and other details prior to making cutout.

Warranties: Please see Use & Care manual or Bosch website for statement of limited warranty.

For more information on our entire line of products, go to www.bosch-home.com/us or call 1-800-944-2904

© BSH Home Appliances Corporation. All rights reserved. Bosch is a registered trademark of Robert Bosch GmbH.

24" Compact Washer

300 Series Washer – WGA14400UC

Installation Details

Closet: Stacked Washer and Condensation Dryer

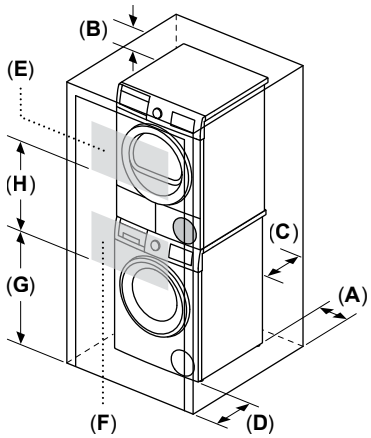

Minimum clearance requirements
(Stacked, Stand Alone or Side by Side):
A: Both sides (left and right) – 5/8"
B: Top – 6¼"
C: Rear – 2½"
D: Front – 2½"

Minimum louvered area and spacing:
E: Top louver area – 63 sq. in.
F: Bottom louver area – 63 sq. in.
G: Lower Height (stacked) – 37"
H: Upper Height (stacked) – 26"
J: Lower Height (stand alone) – 3"
K: Upper Height (stand alone) – 29"

For shortest drying times keep closet door open while dryer is operating. When closet doors are closed, open areas only allow minimal drying results (expect long drying times).

Closet: Stand Alone (shown) or Side by Side

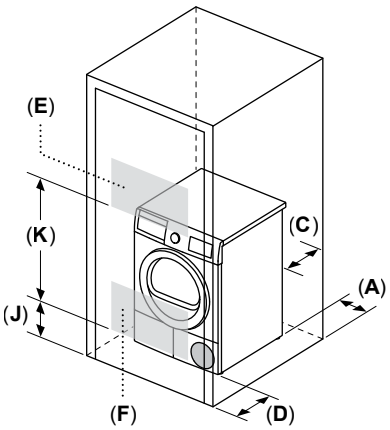

Closet: Stacked Washer with Heat Pump Dryer

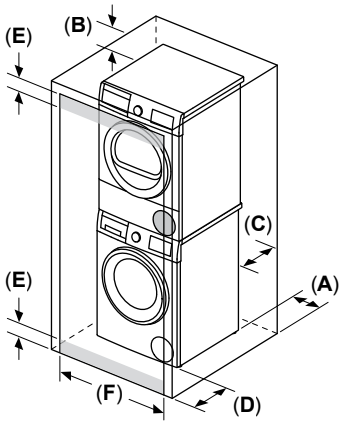

Minimum clearance requirements
(Stacked, Stand Alone or Side by Side):
A: Both sides (left and right) – 1/2"
B: Top – 6¼"
C: Rear – 3"
D: Front – ½"

Minimum door undercut (louvered area):
E: Undercut height (Top and Bottom) – 1¼"
Louvered areas of equal total sizes and split between upper and lower portions of door are permitted.
F: Undercut width (Top and Bottom):
– 24" minimum for Stacked and Stand Alone
– 48" minimum for Side by Side

For shortest drying times keep closet door open while dryer is operating. When closet doors are closed, open areas only allow minimal drying results (expect long drying times).

Under Counter (Preferred)

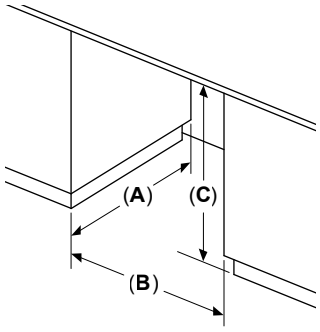

Minimum opening dimensions:
A: Depth – 28"
B: Width – 23⅞"
C: Height – 34½"

Front of appliance fully open.
No doors or coverings.

Under Counter Enclosed (Less Preferred)

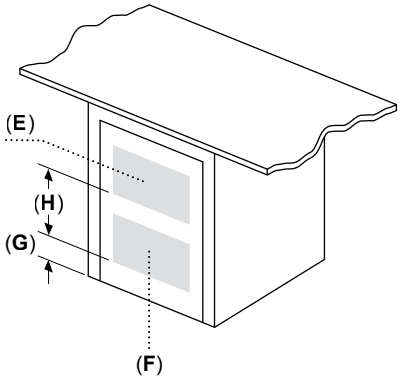

If the front of the appliance is covered, louvered openings must be installed as shown and front/rear clearances adhered to according to closet installations.

Minimum louvered area and spacing:
E: Top louver area – 63 sq. in.
F: Bottom louver area – 63 sq. in.
G: Lower Height – 3"
H: Upper Height – 14"

For shortest drying times keep cabinet door open while dryer is operating. When cabinet door is closed, open areas only allow minimal drying results (expect long drying times).

measurements in inches

Accessories: To purchase Bosch accessories, cleaners & parts please visit www.bosch-home.com/us/store or call 1-800-944-2904 (Mon to Fri 5 am to 6 pm PST, Sat 6 am to 3 pm PST).

Notes: All height, width and depth dimensions are shown in inches. BSH reserves the absolute and unrestricted right to change product materials and specifications, at any time, without notice. Consult the product's installation instructions for final dimensional data and other details prior to making cutout.

Warranties: Please see Use & Care manual or Bosch website for statement of limited warranty.

For more information on our entire line of products, go to www.bosch-home.com/us or call 1-800-944-2904

© BSH Home Appliances Corporation. All rights reserved. Bosch is a registered trademark of Robert Bosch GmbH.