FRIGIDAIRE

frigidaire.com/register

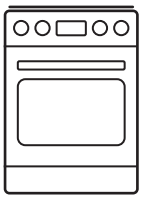

**EN** User Manual | **Induction Range**

**Welcome to our family**

Thank you for bringing Frigidaire into your home! We see your purchase as the beginning of a long relationship together.
This manual is your resource for the use and care of your product. Please read it before using your appliance. Keep it handy for quick reference. If something doesn't seem right, the troubleshooting section will help you with common issues.
FAQ, helpful tips and videos, cleaning products, and kitchen and home accessories are available at **http://www.frigidaire.com**.
We are here for you! Visit our website, chat with an agent, or call us if you need help. We may be able to help you avoid a service visit. If you do need service, we can get that started for you.
Let's make it official! Be sure to register your product.

CONTENTS


**1.** IMPORTANT SAFETY INFORMATION....2
**2.** COOKING RECOMMENDATIONS....5
**3.** BEFORE USING THE COOKTOP....7
**4.** SETTING INDUCTION SURFACE CONTROLS....8
**5.** BEFORE USING THE OVEN....10
**6.** SETTING OVEN CONTROLS....10
**7.** CARE AND CLEANING....15
**8.** TROUBLESHOOTING....17
**9.** LIMITED WARRANTY....19


# 1. IMPORTANT SAFETY INFORMATION

## 1.1 Keep a record for quick reference

Model number

.....

Serial number

.....

Purchase date

.....

**Serial Number Location**

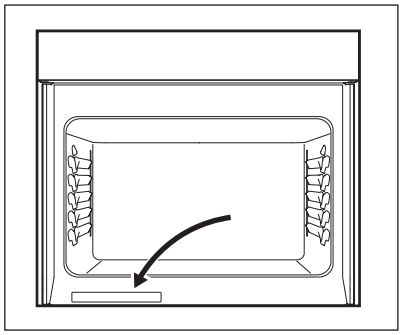

Read all instructions before using this appliance.
This manual contains important safety symbols and instructions. Please pay attention to these symbols and follow all instructions given.
Read safety precautions in this manual before installing or using your appliance. Safety items throughout this manual are labeled with a WARNING or CAUTION statement based on the risk type.
Warnings and important instructions appearing in this guide are not meant to cover all possible conditions and situations that may occur. Common sense, caution, and care must be exercised with installing, maintaining, or operating your appliance.

## 1.2 ✓ Installation checklist

- Read all the safety instructions in the front of your user manual.
- Remove all packaging materials from your appliance before cooking.
- Confirm that the electrical power to the appliance is turned on.
- Wipe out the inside of the oven cavity with a damp cloth.
- Apply a thin layer of cooking oil to the sides of the oven racks to keep them gliding smoothly.
- Set the clock. Refer to the set the clock chapter.
- Test all surface elements/burners to make sure they are working properly.
- Before cooking, set the oven to bake at 350°F (177ºC) for 30 minutes. Some noise and odors are normal on the first cooking cycle.
- Remember to complete your product registration.

## 1.3 Safety definitions

⚠
This is the safety alert symbol. It is used to alert of potential personal injury hazards. Follow all safety messages that follow this symbol to avoid possible injury or death.

**⚠ WARNING!**
Indicates a potentially hazardous situation which, if not avoided, may result in death or serious injury.

**⚠ CAUTION!**
Indicates a potentially hazardous situation which, if not avoided, may result in minor or moderate injury.

**➲ IMPORTANT**
Indicates installation, operation, or maintenance information which is important but not hazard-related.

**NOTE**
Indicates a short, informal reference – something written down to assist the memory or for future reference.

## ⚠ WARNING!

**Tip over hazard**

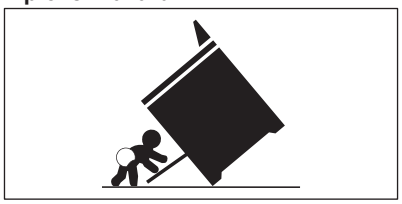

- A child or adult can tip the oven and be killed.
- Install the anti-tip device to oven and/or structure per installation instructions.
- Ensure the anti-tip device is re-engaged when the oven is moved.
- Do not operate the oven without the anti-tip device in place and engaged.
- Failure to follow these instructions can result in death or serious burns to children and adults.

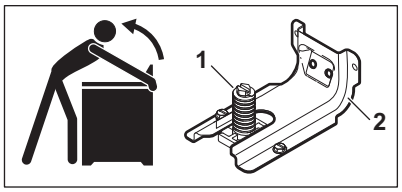


1. Range leveling leg / 2. Anti-tip bracket

To check if the anti-tip bracket is installed properly, use both arms to grasp the rear edge of the range back. Carefully attempt to tilt range forward. When properly installed, the range should not tilt forward.

Refer to the anti-tip bracket installation instructions supplied with your range for proper installation.

## 1.4 Important instructions for unpacking and installation

### ➔ IMPORTANT

Read and follow the below instructions and precautions for unpacking, installing, and servicing your appliance.

Remove all tape and packaging before using the appliance. Destroy the carton and plastic bags after unpacking the appliance. Never allow children to play with packaging material. Do not remove the wiring label and other literature attached to the appliance. Do not remove model/serial number plate.

Cold temperatures can damage the electronic control. When using this appliance for the first time, or when the appliance has not been used for an extended period of time, be sure the appliance has been in temperatures above 32ºF (0ºC) for at least 3 hours before turning on the power to the appliance.

All materials used in construction of cabinets, enclosures, and supports surrounding the product must have a temperature rating above 200°F (94°C).

Never modify or alter the construction of the appliance by removing the leveling legs, panels, wire covers, anti-tip brackets/ screws, or any other part of the appliance.

Be sure to have an appropriate foam-type fire extinguisher available, visible, and easily accessible located near the appliance.

## 1.5 Grounding instructions

### ⚠ WARNING!

- Avoid fire hazard or electrical shock. Failure to follow this warning may cause serious injury, fire, or death.
- Avoid fire hazard or electrical shock. Do not use an adapter plug, use an extension cord, or remove grounding prong from the power cord. Failure to follow this warning may cause serious injury, fire, or death.

Proper Installation - Be sure your appliance is properly installed and grounded by a qualified technician. In the United States, install in accordance with the National Fuel Gas Code ANSI Z223.1/NPFA No. 54, latest edition and National Electrical Code NFPA No. 70 latest edition, and local electrical code requirements. In Canada, install in accordance with CAN/CGA B149.1 and CAN/CGA B149.2 and CSA Standard C22.1, Canadian Electrical code, Part 1- latest editions and local electrical code requirements. Install only per installation instructions provided in the literature package for this appliance.

For personal safety, this appliance must be properly grounded. For maximum safety, the power cord must be securely connected to an electrical outlet or junction box that is the correct voltage, is correctly polarized and properly grounded, and protected by a circuit breaker in accordance with local codes.

It is the personal responsibility of the consumer to have the appropriate outlet or junction box with the correct, properly grounded wall receptacle installed by a qualified electrician. Contact a qualified installer to assure that the electrical installation is adequate and is in conformance with all local codes and ordinances.

See the installation instructions packaged with this appliance for complete installation and grounding instructions.

## 1.6 Important instructions for using the appliance

### ⚠ WARNING!

- Storage In or On Appliance - Flammable materials should not be stored in an oven or microwave, near surface burners or elements, or in the storage or warmer drawer (if equipped). This includes paper, plastic, and cloth items, such as cookbooks, plasticware, and towels, as well as flammable liquids. Do not store explosives, such as aerosol cans, on or near the appliance.
- Do not leave children alone - Children should not be left alone or unattended in the area where appliance is in use. They should never be allowed to sit or stand on any part of the appliance, including the storage drawer, lower broiler drawer, warmer drawer, or lower double oven.
- Do not store items of interest to children in the cabinets above the appliance or on the backguards of ranges. Children climbing on or near the appliance to reach items could be seriously injured.
- Do not allow children to climb or play around the appliance. The weight of a child on an open oven door may cause the appliance to tip, resulting in serious burns or other injury. An open drawer when hot may cause burns.
- Stepping, leaning, or sitting on the door or drawers of this appliance can result in serious injuries and also cause damage to the appliance.
- Never cover any slots, holes, or passages in the oven bottom or cover an entire rack with materials such as aluminum foil. Doing so blocks airflow through the oven and may cause carbon monoxide poisoning. Aluminum foil linings may also trap heat, causing a fire hazard.
- Do not use oven or warmer drawer (if equipped) for storage.
- Never use your appliance as a space heater to heat or warm the room. Doing so may result in carbon monoxide poisoning and overheating of the appliance.

### ⚠ CAUTION!

- When heating fat or grease, watch it closely. Grease may catch fire if it becomes too hot.
- Do not use water or flour on grease fires. Smother fire or flame or use dry chemical or foam-type extinguisher. Cover the fire with a pan lid or use baking soda.
- Use dry potholders. Moist or damp potholders on hot surfaces may result in burns from steam. Do not let potholders touch hot cooking areas. Do not use towels or other bulky cloths.
- Do not heat unopened food containers - Build-up of pressure may cause container to burst and result in injury.
- Wear proper apparel - Loose-fitting or hanging garments should never be worn while using the appliance. Do not let clothing or other flammable materials contact hot surfaces.
- Do not touch surface burners or elements, or areas near these burners or elements, interior surfaces of the oven, or the warmer drawer (if equipped). Surface burners and elements may be hot even though they appear cool. Areas near surface burners and elements may become hot enough to cause burns. During and after use, do not touch, or let clothing or other flammable materials touch these areas until they are cool. These areas may include the cooktop, surfaces facing the cooktop, oven vent areas, oven door, and oven window.
- Do not attempt to operate the appliance during a power failure. If the power fails, always turn off the appliance. If the appliance is not turned off and the power resumes, electric surface elements may resume operation when power is restored. Once the power resumes, reset the clock and the oven function.

## 1.7 Important instructions for using induction cooktop

### ⚠ CAUTION!

- Persons with a pacemaker or similar medical device should exercise caution using or standing near an induction unit while it is in operation, as the electromagnetic field may affect the working of the pacemaker or similar medical device. It would be advisable to consult your doctor or the pacemaker or similar medical device manufacturer about your particular situation.
- Do not place metallic objects such as knives, forks spoons, and lids on the cooktop surface, since they can get hot.

Know which knob or key controls each surface heating area. Place cookware with food on the cooking area before turning it on. Turn the cooking area off before removing the cookware.
Cookware handles should be turned inward and not extend over adjacent surface elements. To reduce the risk of burns, ignition of flammable materials, and spillage due to unintentional contact with the utensil, the handle of the cookware should be positioned so that it is turned inward, and does not extend over other cooking areas.
Glazed cooking utensils - Only certain types of cookware are suitable for cook top service and must be magnetic to work properly on the induction zones. Check the manufacturer's recommendations for cooktop use to ensure that the cookware is compatible with induction cooking.
Improper cookware may break due to sudden changes in temperature. Check the cookware manufacturer's recommendations for cooktop use.
Use proper pan size - This appliance is equipped with one or more surface units of different sizes. Select cookware with flat bottoms that match the surface unit size. Using the proper cookware on the cooking area will improve efficiency.
Never leave surface elements unattended. Boil-overs may cause smoking and greasy spills that may ignite. A pan that has boiled dry could be damaged and may damage the cooktop.
When you are flaming foods under a ventilating hood, turn on the fan.

## 1.8 Important instructions for using glass and ceramic cooktops

Do not clean or operate a broken cooktop. If cooktop should break, cleaning solutions and spillovers may penetrate the broken cooktop and create a risk of electric shock. Contact a qualified technician immediately.
Clean the cooktop glass with caution. If a wet sponge or cloth is used to wipe spills on a hot cooking area, be careful to avoid a steam burn. Some cleaners can produce harmful fumes if applied to a hot surface.
Avoid scratching the cooktop glass with sharp objects.

## 1.9 Important instructions for using your oven

Protective liners: Do not use aluminum foil, aftermarket oven liners, or any other materials or devices to line oven bottom, oven racks, or any other part of the appliance. Only use aluminum as recommended for baking, such as lining

cookware or as a cover placed on food. Any other use of protective liners or aluminum foil may result in a risk of electric shock or fire or a short circuit.
Use care when opening oven door, lower oven door, or warmer drawer (some models). Stand to the side of the appliance when opening the door of a hot oven. Let hot air or steam escape before you remove or replace food in the oven.
Keep oven vent ducts unobstructed. Touching surfaces in this area when the oven is on may cause severe burns. Do not place plastic or heat-sensitive items on or near the oven vent. These items can melt or ignite.
Placement of oven racks: Always place oven racks in desired location while oven is cool. If rack must be moved while oven is hot, do not let potholder contact hot burner or element in oven. Use potholders and grasp the rack with both hands to reposition. Remove all cookware and utensils before moving the rack.
Do not use a broiler pan without its insert. Broiler pans and inserts allow dripping fat to drain away from the high heat of the broiler. Do not cover the broiler insert with aluminum foil; exposed fat and grease could ignite.
Do not cook food on the oven bottom. Always cook in proper cookware and always use the oven racks.

## 1.10 Important instructions for cleaning the appliance

**⚠ CAUTION!**

Before manually cleaning any part of the appliance, be sure all controls are turned off and the appliance is cool. Cleaning a hot appliance can cause burns.

Clean the appliance regularly to keep all parts free of grease that could catch fire. Do not allow grease to accumulate. Greasy deposits in the fan could catch fire.
Always follow the manufacturer's recommended directions for use of kitchen cleaners and aerosols. Be aware that excess residue from cleaners and aerosols may ignite causing damage and injury.
Clean ventilating hoods frequently - Grease should not be allowed to accumulate on hood or filter. Follow the manufacturer's instructions for cleaning vent hoods.

## 1.11 Important instructions for service and maintenance

Do not repair or replace any part of the appliance unless specifically recommended in the manuals. All other servicing should be done only by a qualified technician. This reduces the risk of personal injury and damage to the appliance.
Always contact your dealer, distributor, service agent, or manufacturer about problems or conditions you do not understand.
Ask your dealer to recommend a qualified technician and an authorized repair service. Know how to disconnect the power to the appliance at the circuit breaker or fuse box in case of an emergency.
Remove the oven door from any unused oven if it is to be stored or discarded.
Do not touch a hot oven light bulb with a damp cloth. Doing so could cause the bulb to break. Handle halogen lights (if equipped) with paper towels or soft gloves. Disconnect the appliance or shut off the power to the appliance before removing and replacing the bulb.

**⚠ WARNING!**

California Residents: for cancer and reproductive harm information, visit www.P65Warnings.ca.gov

Important: This appliance has been tested and found to comply with the limits for a class B digital device, pursuant to Part 18 of the FCC rules (United States) and ICES001 (Canada). These limits are designed to provide reasonable protection against harmful interference in a residential installation. This unit uses and can radiate radio frequency energy and, if not installed and used in accordance with the instructions, may cause harmful interference to radio communications. However, there is no guarantee that interference will not occur in a particular installation. If this unit does cause harmful interference to radio or television reception, which can be determined by turning the unit off and on, the user is encouraged to try to correct the interference by one or more of the following measures:

- Reorient or relocate the receiving antennae.
- Increase distance between unit and receiver.
- Connect the unit into an outlet or a circuit different from that to which the receiver is connected.

# 2. COOKING RECOMMENDATIONS

### 2.1 Bakeware

The material of bakeware affects how evenly and quickly it transfers heat from the pan to the food.

| Material | Attributes | Recommendation |
|---|---|---|
| Shiny metal bakeware | Shiny, aluminum, and non-coated bakeware is the best for even heating. It is suitable for all baked goods. | Recommended cooking temperatures and times are based on shiny metal bakeware. |
| Dark metal bakeware | Dark bakeware cooks hotter than shiny bakeware. | Reduce the cooking temperature by 25°F / 13-14°C when you use a dark bakeware. |
| Glass bakeware | Glass bakeware cooks hotter than shiny bakeware.<br>Glass is convenient, you can use the same piece of bakeware for cooking, serving, and storing food. | Reduce the cooking temperature by 25°F / 13-14°C when you use a glass bakeware. |
| Insulated bakeware | Insulated bakeware cooks cooler than shiny bakeware.<br>Insulated bakeware is designed for baking in gas oven. | When you use insulated bakeware, the recipe baking time may be longer than usual. |

## 2.2 Cooking Conditions

Conditions in your kitchen can affect the performance of your appliance when cooking food.

| Condition | Attributes | Recommendation |
|---|---|---|
| Aging cookware | As pans age and become discolored, you may need to slightly reduce a cooking time. | If food is too dark or overcooked, use the minimum cook time in the recipe or packaging.<br>If food is too light or undercooked, use the middle to maximum cook time recommended in the recipe or on the packaging. |
| High altitude | Air is drier and air pressure is lower.<br>Water boils at a lower temperature, and liquids evaporate faster.<br>Foods may take longer to bake.<br>Doughs may rise faster. | Adjust cooking temperature, cooking time or recipes as needed.<br>Increase amount of liquid in baking recipes.<br>Increase cook time on cooktop. Cover dishes to reduce evaporation.<br>Increase bake time or oven temperature.<br>Reduce the amount of baking soda or baking powder in recipe. Reduce rising time or punch down dough and allow it to rise twice. |

## 2.3 Cooking Results

Small adjustments may help you achieve the best results.

| Result | Recommendation |
|---|---|
| Food too light | Use the middle to maximum cook time recommended on packaging or recipe. |
| Food too dark | Use the minimum cook time recommended on packaging or recipe. |

### Bakeware

The material of bakeware affects how evenly and quickly it transfers heat from the pan to the food.

| Material | Attributes | Recommendation |
|---|---|---|
| Shiny metal bakeware | Shiny, aluminum, and non-coated bakeware is the best for even heating. It is suitable for all baked goods. | Recommended cooking temperatures and times are based on shiny metal bakeware. |
| Dark metal bakeware | Dark bakeware cooks hotter than shiny bakeware. | Reduce the cooking temperature by 25°F / 13-14°C when you use a dark bakeware. |
| Glass bakeware | Glass bakeware cooks hotter than shiny bakeware.<br>Glass is convenient, you can use the same piece of bakeware for cooking, serving, and storing food. | Reduce the cooking temperature by 25°F / 13-14°C when you use a glass bakeware. |
| Insulated bakeware | Insulated bakeware cooks cooler than shiny bakeware.<br>Insulated bakeware is designed for baking in gas oven. | When you use insulated bakeware, the recipe baking time may be longer than usual. |

## 2.4 Cooking Tips

Use these additional tips to get the best results from your appliance.

| Situation | Recommendation |
|---|---|
| **Baking** | |
| Rack placement | Refer to Setting Oven Controls. |
| Preheat | Fully preheat the oven before baking items like cookies, cakes, biscuits, and breads. Insert food immediately after the beep. |
| Checking food | Use the window and oven light when you check the food. Opening the door may reduce baking performance. |
| Bake or Convection Bake | Convection bake is the best function to use for baking on multiple racks. For best performance, refer to Setting Oven Controls. |
| Food placement | Allow at least 2 inches / 5 cm of space between bakeware for proper air circulation. |
| **Broiling / Roasting** | |
| Broiling pan | For best results when broiling, use a broil pan with an insert designed to drain the fat from the food, help avoid spatter, and reduce smoke. The broiler pan catches grease spills, and insert helps prevent grease splatters. |
| **Convection cooking** | |
| Convection attributes | Convection cooking uses a fan to circulate hot air around the oven and food. It browns food more evenly and reduces hot spots in the oven.<br>Convection saves time when you use multiple racks or cook several food items at once. |
| Convection bake | Reduce cooking temperature by 25°F / 13-14°C from the recipe unless the recipe is written for convection baking.<br>Preheat the oven for best result. |

**⚠ WARNING!**

Refer to Safety chapters.

### 3.1 Induction Cooktop Features

Refer to Safety chapters.

Induction offers several advantages:

- **Cooler Cooktop** - regardless of whether the Induction Cooktop is turned on or not, the surface remains cooler than ceramic cooktops.
- **Cleaner Cooking** - spills do not cook or stick to the surface, because induction works by heating the cookware and not the cooktop.
- **Magnetic Detector** - the coil sensor automatically detects whether the pan is magnetic and prevents from accidental activation.
- **Pan Size Detection** - the pan recognition sensor automatically detects and adapts the Cooking Zones to the pan sizes in use.
- **Energy Efficiency** - induction cooking heats cookware faster while using less energy.
- **Fast Heating** - cookware heats up faster than on a ceramic cooktop. You may need to use a lower setting for cooking food than you are used to.
- **Even Heating** - cookware heats more evenly than on a ceramic cooktop, so you are less likely to have hot or cool spots in the cookware.

**⚠ CAUTION!**

The Cooking Zones do not directly generate heat, but the glass surface may become hot from contact with hot cookware. There is a risk of burns! Do not touch the Cooking Zone or the surrounding area until it is cooled to a safe temperature.

### 3.2 Sounds

The magnetic field over the induction Cooking Zone may cause cookware to vibrate, creating a buzzing or humming noise. These sounds are not unusual, especially at high settings.

You may hear sounds when:

- The bottom of the cookware is not perfectly flat and may vibrate slightly against the cooktop.
- The pan or cookware handle is loose and may vibrate in its socket.
- Cookware is multi-material which may allow small vibrations in its structure.

Sounds are less likely to occur with heavier, higher quality cookware.

An induction cooktop may also produce faint clicking sounds from the electronic switches that maintain the desired cooking temperature. You may also hear a fan that cools the electronics inside the cooktop.

**NOTE**

Be sure to read detailed instructions for induction cooktop cleaning in the “Care and Cleaning” section and “Troubleshooting” section of this User Manual.

### 3.3 Correct Cookware Type

Induction cooking heats the cookware by generating an electromagnetic field using a coil placed under the cooking zone.

Use a suitable cookware, made of or containing a ferromagnetic metal.

- **correct:** cast iron, steel, enamelled steel, stainless steel, multi-layer bottom (with a correct marking from a manufacturer).
- **not correct:** aluminium, copper, brass, glass, ceramic, porcelain.

Cookware is suitable for an induction hob if:

- it has induction symbol on the packaging or on the bottom of the cookware.
- water boils very quickly on a zone set to the highest heat setting.
- a magnet sticks to the bottom of the cookware.

Cookware recommendations:

- Use cookware with a flat bottom, so they make full contact with the entire surface of the cooking zone. Check if the bottom is flat by rotating a ruler across the bottom of the cookware.
- Use quality cookware with heavier bottoms for better heat distribution allowing for more even cooking results.
- The cookware size should be appropriate for the amount of food being cooked.
- Do not use dirty pans with grease buildup. Use only cookware with clean and dry bottom.
- Do not let the cookware boil dry. This may cause damage to the cookware and ceramic cooktop. This type of damage is not covered by the warranty.

**⚠ CAUTION!**

Do not slide the cookware across the cooktop surface. This may scratch the ceramic surface and permanently damage your appliance.

**⚠ CAUTION!**

Do not touch hot cookware with bare hands. There is a risk of burns! Always use oven gloves or pot holders.

### 3.4 Pan Sensing

When the cooktop is active, cookware placement is auto-detected by the Cooking Zones. The corresponding control illuminates, indicating the control section for the active zone.

If you remove a pan from an active cooking zone, the zone will turn off after 30 seconds.

If the cooktop does not detect cookware in any zone for 30 seconds, the whole cooktop will turn off.

Table below shows pan sensing conditions that may prevent pan detection.

| Correct | Incorrect |
|---|---|
| Cookware base material has good magnetic characteristics. | Cookware base material is non-magnetic. |
| Cookware centered correctly on cooking zone. | Cookware not centered on cooking zone. |
| Flat pan bottom and straight sides. | Curved or warped pan bottoms or sides. |
| Pan rests completely and is level on the cooktop surface. | Pan bottom rests on cooktop edge. |
| Pan is properly balanced. | Heavy handle tilts pan. |

### 3.5 Minimum and Maximum Pan Size

The inner ring on each Cooking Zone indicates the minimum, and the outer ring indicates the maximum pan size of each Cooking Zone.

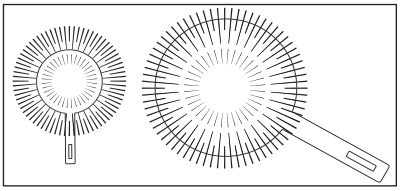

For best results, use cookware that matches the size of the Cooking Zone.

Cookware that is too small for a zone may not activate the cookware detection sensor. Cookware that is much larger than a cooking zone will cook slower and uneven.

If your cookware is not a perfect match, it is best to use a zone a little smaller than the bottom of the cookware.

### 3.6 Using the Cooking Zones

Be sure to follow the recommendations for using the Cooking Zones:

- Place the cookware in the center of the Cooking Zone.
- Use cookware with flat bottom and straight sides.
- Be sure the cookware size meets or exceeds the size of the Cooking Zone by a maximum 1/2 inch (13 mm).
- The bottom of the cookware should completely adhere to the Cooking Zone surface.

**NOTE**

If the cookware does not meet one or more of the above conditions, the power level flashes and the Cooking Zone does not heat up. Correct the problem before attempting to use the cooktop again.

### 3.7 Hot Surface Indicator

When a Cooking Zone is turned off, it may still be hot due to contact with hot cookware. The Hot Surface Indicator will come on and remain visible until the cooking zone cools to a safe temperature.

**⚠ CAUTION!**

The Cooking Zones do not directly generate heat, but the glass surface may become hot from contact with hot cookware. There is a risk of burns! Do not touch the Cooking Zone or the surrounding area until it is cooled to a safe temperature.

**⚠ CAUTION!**

Do not place aluminum foil, plastic items or any material that can melt on top of the range when it is in use. These items could melt or ignite and cause permanent damage to the cooktop. Potholders, towels or wooden spoons may catch fire if placed too close to the Cooking Zones.

**⚠ CAUTION!**

Do not use aluminum foil to line any part of the cooktop. Improper installation of cooktop liners may result in risk of electric shock or fire. If these items melt on the cooktop, they will damage it.

### 3.8 Lock or Unlock the Cooktop

The control can be programmed to lockout the cooktop control keys.

To activate the lockout feature:

1. Press and hold the 🔒 key for 3 seconds.
2. Once the controls are locked, 🔒 will appear on the display.

To cancel the lockout feature:

1. Press and hold the 🔒 key for 3 seconds.
2. When the lock icon no longer displays, the cooktop control keypad is available for use.

**NOTE**

If you press any key when the oven lockout is active, the control will triple beep, indicating the action is not possible.

### 3.9 Moving Cookware on a Smooth Cooktop

Lift the cookware before moving it on the ceramic glass cooktop.

Cookware that has a rough or dirty bottom can mark and scratch the ceramic glass surface.

**NOTE**

Always start with clean cookware.

**⚠ CAUTION!**

Move cookware carefully on the cooktop.

### 3.10 Power Management

The induction cooktop is equipped with 2 generators and 4 cooking zones, depending on a model. Each generator powers 2 cooking zones. If you use more than one cooking zone on high power at the same time and they share the same generator, the cooktop may need to manage power between two cooking zones.

**Power management for 4 cooking zones**

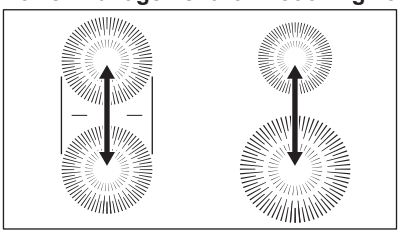

**NOTE**

To get the best performance of the cooking zones, start cooking on a single cooking zone and once the initial cookware reaches the desired cooking temperature, proceed to use the second cooking zone.

### 3.11 Home Canning

Be sure to read and observe all the following points when home canning with your appliance. Check with the USDA (United States Department of Agriculture) Web site and be sure to read all the information available as well as follow recommendations for home canning procedures.

Canning recommendations:

- Use only a completely flat bottom canner with no ridges that radiate from the bottom center when home canning. Heat is spread more evenly when the bottom surface is flat. Use a straight-edge to check canner bottom.
- Make sure the diameter of the canner does not exceed 1 inch beyond the surface element markings or burner.
- It is recommended to use smaller diameter canners on electric coil and ceramic glass cooktops, and to center canners on the burner grates.
- Start with hot tap water to bring water to boil more quickly.
- Use the highest heat setting when first bringing the water to a boil. Once boiling is achieved, reduce heat to lowest possible setting to maintain that boil.
- Use tested recipes and follow instructions carefully. Check with your local Cooperative Agricultural Extension Service or a manufacturer of glass jars for the latest canning information.
- It is best to can small amounts and light loads.

**⚠ CAUTION!**

Do not leave water bath or pressure canners on high heat for an extended amount of time.

## 4. SETTING INDUCTION SURFACE CONTROLS

**⚠ WARNING!**

Refer to Safety chapters.

## 4.1 Cooktop Controls

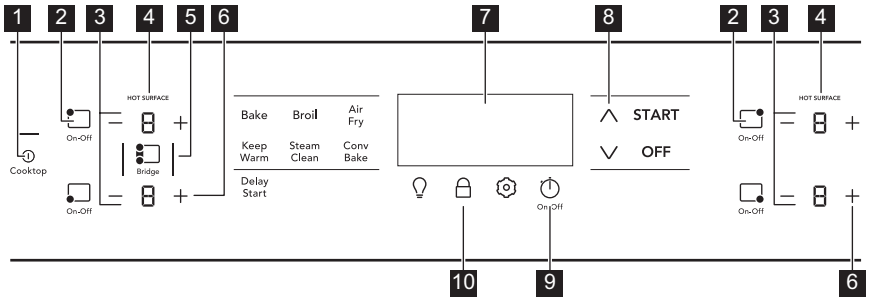


1 **Power** - press to turn on or turn off the cooktop.

2 **Cooking Zone Power Button** - press the symbol to activate or deactivate the Cooking Zone.

3 **Power Level Indicator** - displays the selected power level of the Cooking Zone.

4 **Hot Surface Indicator** - lights up when one of the cooking zones on the same side is hot.

5 **Bridge** - lights up when both left Cooking Zones detect cookware. Refer to Setting Surface Controls chapter.

6 **Cooking Zone Power Adjust +/-** - press + or - to set desired cooking level.

7 **Display** - shows the countdown time.

8 **Up/Down Arrows** - to adjust timer settings.

9 **Timer On/Off** - press to set or cancel the timer.

10 **Lock** - locks the cooktop controls to prevent accidental activation of the Cooking Zones. Refer to Before Using the Cooktopchapter.

## 4.2 Setting Induction Cooking Zones

To operate an induction Cooking Zone:

1. Press **Power** key to turn on the cooktop.
2. Place correctly sized cookware on the cooking zone. The **Power Level Indicator** for the cooking zone will show “--”.
3. Press the **Cooking Zone Power Button** for the active cooking zone. The **Power Level Indicator** for the cooking zone will show “0”.
4. Press **+** or **-** to set the Cooking Zone to the desired level. Refer to Setting Induction Surface Controls - "Suggested Zone Settings" section. You can change the setting any time during cooking.
5. When cooking is complete, press **Cooking Zone Power Button** or **Power** key to turn off the Cooking Zone, before removing the cookware. If all of the zones are off, the cooktop will automatically turn off in 30 seconds.

### IMPORTANT

Do not leave empty cookware on an operating cooking zone. Cookware will heat up very quickly and may be damaged or deformed.

### NOTE

The Cooking Zone will activate only with correct cookware in position. Refer to Before Using the Cooktop - "Pan Sensing" and "Correct Cookware Type".

## 4.3 Suggested Induction Cooking Zone Settings

Start most cooking operations on a higher setting, then turn to a lower setting to finish cooking.

The suggested settings found in the table below are based on cooking with medium-weight stainless steel pans with lids. Settings may vary when using other types of pans.

**Power Level Induction Recommendation**

| Power Level | Temp Range | Type of Cooking |
|---|---|---|
| 1 | Low | Keep foods warm. 1) |
| 2 - 4 | Medium Low | Continue cooking, poach, stew.1)2) |
| 5-6 | Medium | Maintain a slow boil, thicken sauces and gravies, steaming cooking.2) |
| 7-8 | Medium High | Keep foods cooking; poaching and stewing.2) |
| 9 | High | Start cooking most foods, maintain water at a boil, pan cooking, searing. |
| P | Power Boil | Start heating pans that contain large amounts of food or to bring pots of water to boil. |

1) Use this setting if you want to keep food warm at temperature range 145°F -160°F .
2) Use this setting if you want to simmer at temperature range 185°F - 200°F.

NOTE:

- The cooking result depends on the size and type of cookware and amount of food being cooked.
- The Power Boil function is active only for 10 minutes, after this time it will automatically change to High setting (9).
- When you turn off the Cooking Zone and it is still hot, the Hot Surface Indicator will remain on until the surface cools down sufficiently.

## 4.4 Bridge Function

The Bridge function allows you to use an extra-long piece of cookware, such as a griddle, on the left side of your cooktop.

If one of the left Cooking Zones is active and cookware is detected in both of the left zones, the bridge function becomes available.

To operate the function:

1. Press **Power** key to turn the cooktop on.
2. Place a long piece of cookware on both left zones.

The Power Level Indicators of the zones will show “--”.

3. Press **Cooking Zone Power Button** for one of the Cooking Zones.

The **Power Level Indicator** will show "0".

4. Press **Bridge** key to activate the Bridge Function.

The led indicators on both sides of the key will light up and the Cooking Zone setting for of the left zones will become linked.

5. Set the Cooking Zone to the desired level by pressing **+** or **-** on the front left Cooking Zone.

You can change the setting at any time during cooking

To deactivate the Bridge Function, press the **Bridge** control or deactivate one of the bridged cooking zones by pressing its **Cooking Zone Power Button**.

## 4.5 Setting the Timer

The range has a timer function to remind you when food has been cooking for a specified amount of time.

To set the Timer:

1. Press On-Off.

The Display will show "00".

2. Press **Up/Down Arrows** to set the desired number of minutes. You can press and hold the keys to set the value faster.
3. Press On-Off again to start the countdown.

You can press **Up/Down Arrows** to adjust the remaining time at any time.

When the set time ends the signal will sound and **"End"** message will appear on the display. Press the arrow or ⏻ to cancel the alarm.

You can deactivate the Timer by pressing ⏻ at any time.

**➔ IMPORTANT**

When the Timer stops or the signal sounds, the Cooking Zones will continue to operate. The timer does not affect the cooking zone settings in any way.

## 5. BEFORE USING THE OVEN

**⚠ WARNING!**

Refer to Safety chapters.

### 5.1 Oven Vent Location

The oven air vents are located in the rear side of the cooktop. When the oven is on, warm air is released through the vent. This venting is necessary for proper air circulation in the oven and good baking results.

Steam or moisture may appear near the oven vent. This is normal.

**➔ IMPORTANT**

Do not block oven vent or cover the openings with aluminium foil or any other material.

**⚠ WARNING!**

Protective Liners — Do not use aluminum foil (or any other material) or liners to line the oven bottom, walls, racks or any other part of the range. Doing so will alter the heat distribution, produce poor baking results, and possibly cause permanent damage to the oven interior. Improper installation of these liners may result in risk of electric shock or fire.

**⚠ CAUTION!**

Always use pot holders or oven mitts when using the oven. When cooking, the oven interior, oven exterior, oven racks, and cooktop will become very hot which can cause burns.
To prevent possible damage to the oven, do not attempt to close the oven door until all the oven racks are fully positioned back inside the oven cavity.

### 5.2 Types of Oven Rack

**Flat Oven Rack**

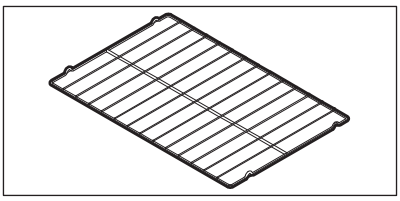

Flat oven racks may be used for most cooking needs and may be placed in most oven rack positions.

## 6. SETTING OVEN CONTROLS

**⚠ WARNING!**

Refer to Safety chapters.

### 6.1 Oven Controls

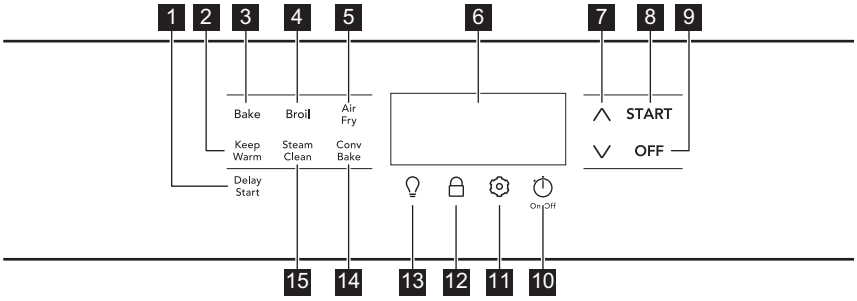


1. **Delay Start** - to postpone the start of the oven cooking.
2. **Keep Warm** - to keep cooked foods at serving temperature in the oven.
3. **Bake** - for delicate foods that need heat to rise and move gently in the oven.
4. **Broil** - for broiling and grilling foods under direct, high heat.
5. **Air Fry** - for preparing packaged and convenience foods with little or no oil.
6. **Display** - shows the countdown time.
7. **Up/Down Arrows** - to scroll to temperature and time settings.
8. **START** - starts cooking functions and sets the clock.
9. **OFF** - turns off all cooking functions.
10. **Timer On/Off** - to set or cancel the minute timer.
11. **Settings** - to set user preferences for various control functions, including:
    - **"CloC"::** to set clock to 12-hour or 24-hour mode.
    - **"Hour":** to switch between the 12-hour energy saving feature or Continuous Bake.
    - **"Aud":** to set the volume of control keys or to operate in silent mode.
    - **"F-C":** display temperatures in Fahrenheit or Celcius.
    - **"rSEt":** to reset all user preferences to original factory settings.
    - **"uPo":** to adjust the oven temperature settings.
    - **"E-SA":** to turn the 12-hour energy savings feature on or off .
12. **Lock** - deactivates the control panel to prevent accidental operation of the appliance.
13. **Oven Light** - to turn the interior light on and off. The oven light also turns on automatically when you open the door.
14. **Conv Bake** - circulates the oven heat continuously for baking.

15 **Steam Clean** - starts a steam cleaning cycle to loosen light soils.

| Feature | Mode | Min.Temp/Time | Max.Temp/Time |
|---|---|---|---|
| Bake | | 170°F (77°C) | 550°F (288°C) |
| Broil | | LO | HI |
| Conv Bake | | 170°F (77°C) | 550°F (288°C) |
| Keep Warm | | 170°F (77°C) | 200°F (93°C) |
| Clock | 12 Hr. | 1:00 Hr./Min. | 12:59 Hr./Min. |
| | 24 Hr. | 0:00 Min | 23:59 Hr./Min. |
| Timer On/Off | | 0:01 Min. | 11:59 Hr./Min. |

**NOTE**

An entry acceptance tone (1 beep) will sound each time a key is touched (the oven lock key is delayed 3 seconds). An entry error tone (3 short beeps) will sound if the entry of the temperature or time is below the minimum or above the maximum settings for the feature.

## 6.2 Setting the Clock

Set the clock to the correct time of day before using the appliance.

**NOTE**

When the appliance is first plugged in or if the power supply is interrupted, the display will flash 12:00. In this case, skip to Step 4 of the instructions below.

To set the clock:

1. Press ⚙.
2. Press the **Up** or **Down** arrow until **"CloC"** appears on the display.
3. Press **START**.
4. Press the **Up** or **Down** arrow until the correct time appears on the display. You can press and hold the **Up** or **Down** arrow to change the time faster.
5. Press **START**.

**NOTE**

You cannot change the clock when the oven is set for cooking.

## 6.3 Setting 12 hr or 24 hr Display Mode ("Hour")

The clock display mode allows you to select 12 hr or 24 hr modes. The factory pre-set clock display mode is 12 hours.

To set display mode:

1. Press ⚙.
2. Press the **Up** or **Down** arrow until **"Hour"** appears on the display.
3. Press **START**.
4. Press **Up** or **Down** arrow key to switch between 12 hr and 24 hr setting.
5. Press **START** to confirm the desired clock setting.

Display will return to the settings menu. After a few seconds, it will return to the time of day.

## 6.4 Setting a Silent Control Panel Mode ("Aud")

When selecting a function, an audible tone is heard each time a key is pressed. You can set the control to silent operation, if needed.

To set the controls for silent mode:

1. Press ⚙.
2. Press the **Up** or **Down** arrow until **"Aud"** appears on the display.
3. Press **START**.
4. Press **Up** or **Down** arrow key to switch between **"oFF"** and **"on"**.
5. Press **START** to confirm the desired setting.

Display will return to the settings menu. After a few seconds, it will return to the time of day.

## 6.5 Setting Temperature Display ("F-C")

The default unit in which temperature is displayed is Fahrenheit (°F). You can change the unit to Celsius (°C). You can set the oven to operate at any temperature from 170°F to 550°F (77°C to 287°C)

To change the temperature unit:

1. Press ⚙.
2. Press the **Up** or **Down** arrow until **"F-C"** appears on the display.
3. Press **START**.
4. Press **Up** or **Down** arrow key to switch between **"F"** and **"C"**.
5. Press **START** to confirm the desired setting.

Display will return to the settings menu. After a few seconds, it will return to the time of day.

## 6.6 Adjust Oven Temperature ("UPO")

Your appliance has been factory calibrated and tested to ensure an accurate baking temperature. For the first few uses, follow your recipe times and temperature recommendations carefully. If you think the oven is cooking too hot or too cool for your recipe times, you can adjust the control so the oven cooks hotter or cooler than the temperature displayed.

**IMPORTANT**

Do not use oven thermometers such as those found in grocery stores to check the temperature settings inside your oven. These oven thermometers may vary by 20 to 40 degrees from actual temperatures.

To increase or decrease the oven temperature by 20°F:

1. Press ⚙.
2. Press the **Up** or **Down** arrow until **"UPO"** appears on the display.
3. Press **START**.
4. Press the **Up** or **Down** arrow until the desired temperature adjustment appears in the display.
   The oven temperature may be changed by +/-35°F from the factory settings. You can also adjust the temperature if the control is set to display temperatures in Celsius (+/-19°C).
5. Press **START** to confirm the desired setting.

**NOTE**

Oven temperature adjustments will not change for the functions: Broil, or Keep Warm.

## 6.7 Restore Factory Settings ("rSEt")

Your appliance was set with default oven control settings. You can change the following settings while using the appliance over time:

- 12 hr or 24 hr display mode
- Continuous bake or 12-hour energy savings mode
- Silent or audible controls
- Oven temperature display (Fahrenheit or Celsius)
- Oven temperature adjustments ("UPO")

To restore oven control to factory default settings:

1. Press ⚙.
2. Press the **Up** or **Down** arrow until **"rSEt"** appears on the display.
3. Press and hold **START** for 3 seconds. The control has been reset with the default settings.

## 6.8 Continuous Bake Setting or 12-hour Energy Saving Feature ("E-SA")

The oven control has a built-in 12-hour energy saving feature that will shut off the oven if the oven is left on for more than 12 hours. The oven control can be programmed to override this feature for continuous baking.

To change the continuous bake setting:

1. Press ⚙.
2. Press the **Up** or **Down** arrow until **"E-SA"** appears on the display.
3. Press **START**.
4. Press the **Up** or **Down** arrow to switch between **"12Hr"** and **"Cont."**.

5. Press **START** to confirm the desired setting.

### 6.9 Setting the Minute Timer

The timer can be set for any amount of time from 1 minute to 11 hours and 59 minutes. The minute timer can be used alone or while using any of the other oven features. If another feature is active when the minute timer is active, the minute timer will show in the display. To view information about other active features, press the key for that feature.

**NOTE**

The Minute Timer does not start or stop the cooking process.

Example: Setting timer for 15 minutes.

1. Press On-Off.
2. Press **Up** or **Down** arrows until the desired time appears in the display. You can press and hold the **Up** or **Down** arrow to change the time faster.
3. Press **START**. The timer will begin to countdown.

When the set time ends, the display will show **"End"**.

To turn the timer off at any time, press On-Off.

The timer will beep three times and will continue to beep three times every minute until On-Off is pressed.

### 6.10 Operating Oven Light

The interior oven light will automatically turn on when the oven door is opened.

Press to turn the interior oven light on and off whenever the oven door is closed.

For best baking results, do not leave oven light on while baking.

To change the interior oven light, refer to Care and Cleaning.

### 6.11 Oven Lock

The appliance can be programmed to lockout: cooktop surface, oven control keys.

#### To activate the lockout feature:

1. Press and hold the key for 3 seconds.
2. Once the controls are locked, will appear on the display.

#### To cancel the oven lockout feature:

1. Press and hold the key for 3 seconds.
2. When the lock icon no longer displays, the oven control keypad is available for use.

**NOTE**

If you press any key when the oven lockout is active, the control will triple beep, indicating the action is not possible.

### 6.12 Setting Bake

Bake cooks with heat that rises from the oven bottom. The heat and air circulate naturally in the oven. A tone will sound indicating when the set bake temperature is reached and to place the food in the oven. The convection fan will turn on in preheat and then cycle on and off as needed during baking. Bake may be set for any oven temperature between 170°F (77°C) to 550°F (288°C).

**⚠ CAUTION!**

Always use pot holders or oven gloves when using the oven. When cooking the oven interior, oven racks, and cooktop will become very hot. There is a risk of burns!

Baking tips:

- Fully preheat the oven before baking items like cookies, cakes, biscuits and breads.
- Use the convection bake function for best results when baking cookies on multiple racks.
- Bake is the best function to use for baking cakes.
- For best results when baking layer cakes using two oven racks, place racks like shown on the picture below.

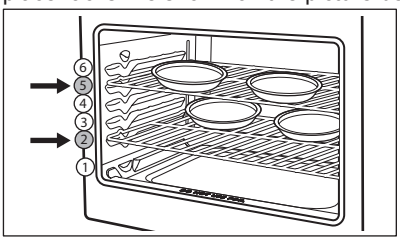


- When using any single rack for baking cookies, cakes, biscuits, or muffins use rack position 3.
- Allow at least 2 inches (5 cm) of space between bakeware for proper air circulation.
- Dark or dull bakeware absorbs more heat than shiny bakeware, resulting in dark or overbrowned foods. It may be necessary to reduce oven temperature or cook time to prevent overbrowning of some foods.
- Dark pans are recommended for pies. Shiny pans are recommended for cakes, cookies, and muffins.
- Do not open oven door often. Opening the door will reduce the temperature in the oven and may increase cook time.
- Do not leave oven light on while baking.

**IMPORTANT**

The oven will bake no longer than 12 hours. If you wish to bake for a longer period, see “Continuous Bake Setting or 12-hour Energy Saving Feature (E-SA)” section for detailed information.

#### To set Bake for (default) oven temperature of 350°F:

1. Press **Bake**. **"Bake"** and **350°** will appear on the display.
2. Press **START**.

To cancel Bake at any time, press **OFF**.

#### To change the oven temperature to 425°F when the oven is baking:

1. Press **Up** arrow to scroll to new temperature of 425° and release the arrow key.
2. Press **START**. If you do not press the **START**, the temperature will return to the previous setting.

To cancel Bake at any time, press **OFF**.

### 6.13 Setting Conv Bake

Convection Bake uses a fan to circulate the oven's heat uniformly around the oven. This improved heat distribution allows for even cooking and browning results. Heated air flows around the food from all sides. The convection fan will turn on in preheat and remain on during baking. Convection Bake may be set for any oven temperature between 170°F (77°C) and 550°F (288°C).

**⚠ CAUTION!**

Always use pot holders or oven gloves when using the oven. When cooking the oven interior, oven racks, and cooktop will become very hot. There is a risk of burns!

Benefits of convection cooking include:

- Multiple rack baking.
- Foods may cook faster, saving time and energy.

Baking tips:

- Fully preheat the oven before baking items like cookies, cakes, biscuits and breads.
- When baking cakes using two oven racks, place bakeware like shown on the picture below.

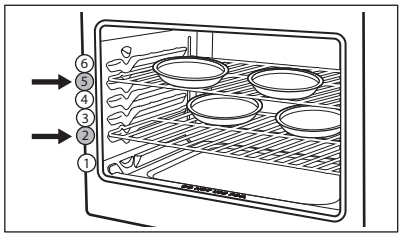


- When using any single rack for baking cookies, cakes, biscuits or muffins, use rack position 3.
- Unless the recipe is written for convection cooking, use Conv Convert to reduce oven temperature from the recipe's recommended oven temperature.
- Dark or dull bakeware absorbs more heat than shiny bakeware, resulting in dark or overbrowned foods. It may be necessary to reduce oven temperature or cook time to prevent overbrowning of some foods.
- Dark pans are recommended for pies. Shiny pans are recommended for cakes, cookies, and muffins.
- Do not open oven door often. Opening the door will reduce the temperature in the oven and may increase cook time.
- Do not leave oven light on while baking.

To set Convection Bake with a default oven set temperature of 325°F:

1. Press **Conv Bake**.
2. **"Conv Bake"** and **325°** will appear on the display.
3. Press **START**. The convection fan will turn on and stay on during the cooking process.

To cancel Convection Bake at any time, press **OFF**.

## 6.14 Setting Broil

Use the Broil function to cook foods that require direct exposure to radiant heat for optimum browning results. Broiling may produce smoke. If smoke is excessive, place food further away from the flames.

### ⚠ WARNING!

Should an oven fire occur, leave the oven door closed and turn off the oven. If the fire continues, use a fire extinguisher. Do not put water or flour on the fire. Flour may be explosive and water can cause a grease fire to spread and cause personal injury.

### ⚠ CAUTION!

Always use pot holders or oven gloves when using the oven. When cooking the oven interior, oven racks, and cooktop will become very hot. There is a risk of burns!

### ➔ IMPORTANT

Broiler pans and inserts allow the grease to drain away from the high heat of the broiler. Do not use the pan without the insert. Do not cover the insert with foil – the exposed grease could ignite.

**OPEN DOOR BROIL SHUTOFF:** If the oven door is left open during Broil for more than 3 minutes, an alarm will sound to notify the user to close the oven door. If the door is not closed within 30 seconds from the start of the alarm, the oven will turn off.

To set broil with the default broil temperature of

550°F:

1. Place the racks in the oven while they are still cold.
2. For optimum browning results, preheat oven for 5 minutes before adding food. Broil with oven door closed.
3. Place the bakeware in the oven.
4. Press **Broil**. **"HI"** will show on the display.
5. Press **Up** or **Down** arrows to select **HI** or **Lo**.
6. Press **START**.
7. Broil on one side until food is browned; turn and broil other side until done to your satisfaction.
8. When finished broiling, press **OFF**.

To cancel Broil at any time, press **OFF**.

## 6.15 Notes for Broiling

- Always arrange oven racks when the oven is cool.
- Broil with oven door closed. If broiling with door open, an alarm will sound alerting you to close the door. If left open, the Broil function will be canceled.
- For best results, use a broil pan with broil pan insert designed to drain the fat from the food, help avoid spatter and reduce smoking.
- When broiling, always pull the oven rack out to the stop position before turning or removing food.
- If a broiler pan and insert are not supplied with this appliance, they may be purchased from www.frigidaire.com.

| Food | Rack Position | Temperature | Cook time (min) | | Internal Temperature | Doneness |
|---|---|---|---|---|---|---|
| | | | 1st side | 2nd side | | |
| Steak 1" thick | 6 | 550°F (288°C) | 5 | 4 | 140ºF (60ºC) | Rare[1)] |
| Steak 1" thick | 5 or 6 | 550°F (288°C) | 6 | 5 | 145ºF (63ºC) | Medium |
| Steak 1" thick | 5 or 6 | 550°F (288°C) | 7 | 6 | 170°F (77ºC) | Well |
| Pork Chops 3/4" thick | 5 | 450°F (232°C) | 12 | 10 | 145ºF (63ºC) | Well |
| Chicken bone-in | 4 | 450°F (232°C) | 20 | 10 | 165°F (74°C) | Well |
| Chicken boneless | 5 | 450°F (232°C) | 8 | 6 | 165°F (74°C) | Well |
| Fish | 5 | 550°F (288°C) | as directed | | 145ºF (63ºC) | Well |
| Shrimp | 4 | 550°F (288°C) | | | 145ºF (63ºC) | Well |
| Hamburger 1" thick | 4 | 550°F (288°C) | 6 | 5 | 145ºF (63ºC) | Medium |
| Hamburger 1" thick | 4 | 550°F (288°C) | 7 | 6 | 160 °F (71ºC) | Well |

1) The U.S. Department of Agriculture states, "Rare fresh beef is popular, but you should know that cooking it to only 140°F (60°C) means some food poisoning organisms may survive." (Source: Safe Food Book, Your Kitchen Guide) The lowest temperature recommended by the USDA is 145°F (63°C) for medium rare fresh beef. For well done 170°F (77ºC). Allow cooked meat to rest for at least 3 minutes before serving.

### NOTE

Broiling is direct heat cooking and will produce some smoke. If smoke is excessive, place food further away from element. Always watch foods carefully to prevent burning.

## 6.16 Setting Air Fry

The Air Fry function works best for single rack baking with packaged and convenience foods. It works well with most recipes and can be programmed for temperatures between 170°F and 550°F. Follow the instructions on the food packaging regarding quantity, time, and cooking temperature.

Frigidaire offers an optional Air Fry Tray specifically designed to deliver superior performance.

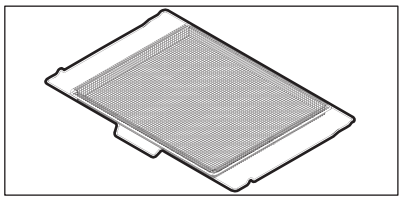

Some benefits of the optional Air Fry tray:

- Tray optimized for oven space.
- Fits in the dishwasher for easy clean-up.
- Higher yield than countertop models.
- Frees up countertop space.
- Compatible with convection ovens.
- The optional Air Fry tray may be purchased from www.frigidaire.com.

Air Fry tips:

- Food should be arranged in single layers on the Air Fry tray and placed on rack position 3 for best results.
- When using the Air Fry tray, place a large cookie sheet on rack position 1 to catch any crumbs or drippings.
- Leave oven light off when baking.
- Food may need to be removed early and should be checked at the minimum recommended bake time. However, frozen dense foods and items with cook times less than 15 minutes may require additional time.

To set the Air Fry function:

1. Arrange food on rack as suggested.
2. Press **Air Fry**.
3. Press **Up** or **Down** arrow to select temperature for particular food.
4. Press **START**.
5. When preheat tone sounds, place the tray on rack position 3.
6. Press **OFF** to return display to show the time of day.

| Food Type | Quantity (oz.) | Temperature | Cook Time (min.) |
|---|---|---|---|
| Frozen Tater Tots | 48 | 450°F - 232°C | 29-33 |
| Frozen Golden Fries | 48 | 425°F - 218°C | 25-35 |
| Frozen Chicken Nuggets | 48 | 400°F - 205°C | 13-15 |
| Frozen Crispy Chicken Strips | 48 | 400°F - 205°C | 20-22 |
| Frozen Hot Wings Bone-In | 48 | 450°F - 232°C | 25-28 |
| Frozen Chicken Wings | 48 | 375°F - 190°C | 60-65 |
| Fresh Chicken Wings | 48 | 450°F - 232°C | 30-40 |

## 6.17 Steam Clean

The Steam Clean feature offers a chemical free and time saving method to assist in the routine cleaning of small and light soils.

Be sure the oven is level and cool before starting Steam Clean. If the oven temperature is above room temperature, a triple beep will be heard, and the function will not start. Steam Clean produces best results when started with a cool oven.

### ⚠ CAUTION!

Do not add bleach, ammonia, oven cleaner, or any other abrasive household cleaners to the water used for Steam Clean.
Before cleaning any part of the oven, be sure all controls are turned off and the oven is cool. There is a risk of burns!

To set a Steam Clean cycle:

1. Remove all racks and oven accessories.
2. Scrape or wipe loose debris and grease from the oven bottom.
3. Pour 1 cup of tap water onto the oven bottom. Close oven door.

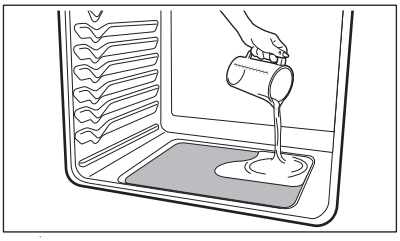

4. Press **Steam Clean**.
5. Press **START**. The time left for the Steam Clean cycle is shown on the display. Do not open the door during this time. If door is open while in Steam Clean, **"d-O"** will appear on the display after a few minutes.
6. When the Steam Clean cycle is complete, an alert will sound, and the "End" message will show on the display. Press **"oFF"** to return to the clock.
7. Carefully open the door when the Steam Clean is finished. Stand to the side of the oven, hot air will come out from inside the oven.
8. Wipe oven cavity and bottom. Do not clean oven door gasket. Avoid leaning or resting on the oven door glass while cleaning the cavity.

Notes:

- Opening the oven door during the Steam Clean cycle prevents the water from reaching the temperature needed to clean.
- For best results, clean oven immediately after the cycle is complete. Steam Clean works best for soils on the oven bottom.
- A non-abrasive scouring pad, stainless steel sponge, plastic scraper, or eraser style cleaning pad (without cleaner) can be used for difficult soils. Moisten pads with water before use.
- Place a paper towel or cloth in front of the oven to capture any water that may spill while wiping out.
- Do not leave the residual water in the oven for any length of time.
- Some condensation or water vapor may appear close to the oven vent and the oven door glass. This is normal. The oven gasket may become damp, do not wipe them dry.
- Local water sources often contain minerals (hard water). If hard water deposits occur, wipe cavity with a 50/50 solution of water and vinegar or 50/50 solution of water and lemon juice.
- Steam Clean cannot be programmed with a Delay Start feature.

## 6.18 Cook Time

Use Cook Time to set the amount of time needed for cooking. This function can be set with most oven functions. The oven will turn on immediately (or after a specified delay) and stop automatically after the set cook time ends.

To set Cook Time:

1. Select a cooking function and set the temperature.
2. Press **Cook Time**. The display will show 0:00 (0 hours and 00 minutes).
3. Press **Up** or **Down** arrows until the desired time shows on the display. You can press and hold the **Up** or **Down** arrow to change the time faster.
4. Press **START**.

The timer will start counting down.
To turn off the oven before the time runs out, press **OFF**.

## 6.19 Delay Start

Delay Start allows you to delay the start of cooking by the desired amount of time. It can be used only with the Bake function. Prior to setting a delay start, be sure the time of day is set correctly. The maximum delay for a Delay Start is one hour.

To set Delay Start:

1. Choose the Bake function and set the temperature.
2. Set a Cook Time if desired.
3. Press **Delay Start**.

The display will show 0:00 (0 hours and 00 minutes).

4. Press **Up** or **Down** arrows until the desired time delay shows in the display. You can press and hold the **Up** or **Down** arrow to change the time faster.
5. Press **START**. The timer will start counting down.

6. When the time runs out, the chosen cooking function will start. If a Cook Time was set, the remaining cook time will show in the display.

To stop the Delay Start timer at any time, press **OFF**.

### 6.20 Keep Warm

Keep Warm should only be used with foods that are fully cooked and at serving temperatures. Keep Warm will keep foods warm and ready for serving at 170° F (77°C). If needed, arrange oven racks and place cooked food in oven.

To set Keep Warm:

1. Press **Keep Warm**.

If no other keys are touched within 25 seconds, the request for Warm will clear.

2. Press **START**.

Keep Warm will automatically turn on and remain on for 3 hours or until cancelled.

To turn off Keep Warm at any time, press **OFF**.

## 7. CARE AND CLEANING

**⚠ WARNING!**

Refer to Safety chapters.

### 7.1 General Information

Remove spills and any heavy soiling as soon as possible. Regular cleaning reduces the difficulty of major cleaning later.

**⚠ CAUTION!**

Before cleaning any part of the appliance, make sure all controls are turned off and the appliance is cool.
If you use ammonia or appliance cleaners, remove them and thoroughly rinse the appliance before operating. Follow manufacturer's instructions and provide adequate ventilation.

**⚠ WARNING!**

Do not use bleach to clean the appliance.

**⚠ CAUTION!**

Use scouring pads, oven cleaners, abrasive cleaners and ammonia with special caution while cleaning the appliance.

| Surface or Area | Cleaning Recommendation |
|---|---|
| Aluminum and vinyl | Use a soft cloth and clean with mild dish detergent and water. Rinse with clean water, dry and polish with a soft, clean cloth. |
| Painted body parts<br>Painted decorative trims | Use a soft cloth and clean with mild dish detergent and water or a 50/50 solution of vinegar and water. Rinse with clean water, dry and polish with a soft, clean cloth. Do not apply glass cleaners directly to the surface, spray onto cloth and wipe. |
| Control panel | Use a soft cloth and clean with mild dish detergent and water or a 50/50 solution of vinegar and water.<br>Do not spray liquids directly on the oven control and display area.<br>Do not use large amounts of water on the control panel. Excess water on the control area may cause damage to the appliance.<br>Do not use other liquid cleaners, abrasive cleaners, scouring pads, or paper towels, they damage the finish. |
| Stainless Steel | Use a soft cloth and clean with mild dish detergent and water or a 50/50 solution of vinegar and water. Rinse with clean water, and dry with a soft clean cloth.<br>Do not use abrasive cleaners such as chlorides, chlorines, or ammonia. |
| Smudge Proof™ Stainless Steel<br>Black Stainless Steel | Use a soft cloth and clean with mild dish detergent and water or a 50/50 solution of vinegar and water. Rinse with clean water, and dry with a soft clean cloth.<br>Do not use appliance cleaners, stainless steel cleaners, or abrasive cleaners such as chlorides, chlorines, or ammonia. These cleaners may damage the finish. |
| Porcelain-enameled broiler pan and insert<br>Porcelain door liner<br>Porcelain body parts | Rinse with clean water and a damp cloth. Scrub gently with a soapy non-abrasive scouring pad to remove most spots. Rinse with a 50/50 solution of clean water and ammonia. If necessary, cover difficult spots with an ammonia soaked paper towel for 30 to 40 minutes. Rinse and wipe dry with a clean cloth. Remove all cleaners to avoid damage to the porcelain caused by heating.<br>Do not allow food spills with a high sugar or acid content such as milk, tomatoes, sauerkraut, fruit juices, or pie filling to remain on porcelain surfaces. They may cause a dull spot even after cleaning. |
| Manual clean oven interior | The interior of the oven is porcelain coated and safe to clean with oven cleaner. Always follow manufacturer's instructions for cleaners. After cleaning, remove all cleaners to avoid damage to the porcelain caused by heating.<br>Do not spray oven cleaner on any electrical controls or switches.<br>Do not spray or allow oven cleaner to build up on the oven temperature sensing probe.<br>Do not spray cleaner on oven door trim, door gasket, plastic drawer glides, handles or any exterior surfaces of the appliance. |
| Oven door | Use mild dish detergent and water or a 50/50 solution of vinegar and water to clean the top, sides, and front of the oven door and rinse well. You can use a glass cleaner on the outside glass of the door. You can use ceramic smoothtop cleaner or polish on the interior door glass.<br>Do not immerse the door in water. Do not spray or allow water or cleaners to enter the door vents.<br>Do not use oven cleaners, cleaning powders, or any harsh abrasive cleaning materials on the outside of the oven door.<br>Do not clean the oven door gasket. The oven door gasket is made of a woven material which is essential for a good seal.<br>Do not rub, damage, or remove oven door gasket. |
| Ceramic cooktop | Refer to **Cooktop Cleaning.** |

## 7.2 Cooktop Maintenance

**NOTE**

Consistent and proper cleaning is essential to maintaining your ceramic glass cooktop.

**First use**

- Apply a ceramic cooktop cleaning cream (available in most hardware, grocery, and department stores) to the ceramic surface. A cooktop cleaning creams leave a protective finish on the glass and help to prevent scratches and abrasions.
- Clean and buff with a clean paper towel. This makes cleaning easier when soiled from cooking.

**NOTE**

Sliding pans on the cooktop can cause metal markings on the cooktop surface. After the cooktop is cool, use a cleaning cream and remove them immediately. Metal marks can become permanent if not removed prior to future use.

**⚠ CAUTION!**

Cast iron, metal, ceramic or glass cookware with rough bottoms can mark or scratch the cooktop surface.

**Do not the following on the cooktop:**

- Slide anything metal or glass across the cooktop.
- Use cookware with dirt or dirt buildup on the bottom. Always use clean cookware.
- Use your cooktop as a cutting board or work surface in the kitchen.
- Cook food directly on the cooktop surface without a pan.
- Drop heavy or hard objects on the ceramic glass cooktop, they may cause it to crack.

## 7.3 Cooktop Cleaning

**⚠ CAUTION!**

Before cleaning the cooktop, make sure the controls are turned to the **OFF** position and the cooktop is cool. The glass surface can be hot from the contact with hot cookware, and burns may occur if you touch the glass surface before it is cooled sufficiently.

**⚠ WARNING!**

Do not use a cooktop cleaner on a hot cooktop. The fumes can be hazardous to your health, and can chemically damage the ceramic-glass surface.

**Light to moderate soil:**

1. Apply a few drops of cleaning cream directly to the cooktop.
2. Use a clean paper towel to clean the entire cooktop surface. Do not use the towel you use to clean the cooktop for any other purpose.
3. Ensure thorough cleaning, do not leave any residue.

**Heavy, burned-on soil:**

1. Apply a few drops of cleaning cream directly to the soiled area.
2. Rub the soiled area, use a non-abrasive cleaning tool, apply pressure as needed.
3. Do not use the same pad you use to clean the cooktop for any other purpose.
4. If soils remain, carefully scrape them with a metal razor blade scraper. Hold the scraper at a 30-degree angle to the surface.
5. Remove any remaining soils, then apply a few drops of cleaning cream and buff the surface clean.

**⚠ WARNING!**

Do not use an abrasive type cleaning pad, it may damage the ceramic glass cooktop. Use only cleaning products recommended for cooktops with glass ceramic surface.

## 7.4 General Cleaning

Refer to the table at the beginning of this chapter for more information about cleaning specific parts of the oven.

**Follow these cleaning precautions:**

- Allow the oven to cool before cleaning.
- Wear rubber gloves when cleaning the appliance manually.

Remove soils using hot, soapy water. Do not allow food spills with a high sugar or acid content (such as milk, tomatoes, sauerkraut, fruit juices or pie filling) to remain on the surface as they may cause a dull spot even after cleaning. Remove spillovers and heavy soiling as soon as possible. Regular cleaning will reduce the effort required for major cleaning later.

**⚠ CAUTION!**

Before manually cleaning any part of the oven, be sure all controls are turned off and the oven is cool. The oven may be hot and can cause burns. Remove all racks and accessories from the oven before cleaning. Ammonia must be rinsed before operating the oven. Provide adequate ventilation.

**Cleaning Porcelain Enamel Oven**

The oven interior is porcelain on steel.

To clean the interior use oven cleaners.

**To remove heavy soil:**

1. Place the dish of ammonia in the oven.
   Let it sit overnight or for several hours with the oven door closed.
   Clean softened dirt spots using hot, soapy water.
   Rinse thoroughly with water and a clean cloth.
2. If soil remains, use a nonabrasive scouring pad or nonabrasive cleaner.
   If necessary, apply an oven cleaner following the manufacturer's instructions.
   Do not mix ammonia with other cleaners.
3. Clean any soil from the oven frame, the door liner outside the oven door gasket, and the small area at the front center of the oven bottom.
   Use hot, soapy water for cleaning.
   Rinse well with clean water and a cloth.

**Aluminum Foil, Aluminum Utensils, and Oven Liners**

**⚠ WARNING!**

Never cover any slots, holes, or passages in the oven bottom or cover an entire oven rack with materials such as aluminum foil. Doing so blocks airflow through the oven and may cause carbon monoxide poisoning. Aluminum foil linings may trap heat, causing a fire hazard.

- Protective liners- Do not use aluminum foil to line the oven bottom. High heat can melt it, damaging the oven and reducing air circulation, leading to poor baking results. Only use aluminum foil as recommended in the manual to avoid electric shock or fire risks
- Aluminum utensils- Aluminum utensils have a lower melting point than other metals. Use aluminum pots and pans with care.
- Oven racks- Do not cover oven racks with aluminum foil. It restricts heat and airflow, affecting cooking results.

## 7.5 Replacing the Oven Light

**⚠ CAUTION!**

Be sure the oven is unplugged and all parts are cool before replacing the oven light.

The interior oven light is located at the rear of the oven cavity and is covered by a glass shield. The glass shield must be in place whenever the oven is in use.

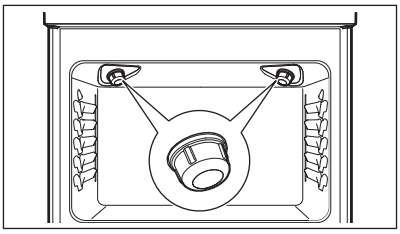

**NOTE**

Wear a cotton glove or use a paper towel when installing a new bulb. Do not touch the new bulb with your fingers when replacing. This will shorten the life of the bulb.

To replace the oven interior light bulb:

1. Turn electrical power off at the main source or unplug the appliance.
2. Remove interior oven light shield by turning a quarter turn counter-clockwise.
3. Replace bulb with a new T-4 type Halogen 25 watt appliance bulb.
4. Replace glass oven light shield by rotating clockwise.
5. Turn power back on again at the main source (or plug the appliance back in).

Be sure to reset the time of day on the clock.

### 7.6 Removing and Replacing the Oven Door

**⚠ CAUTION!**

The door is heavy. For safe, temporary storage, lay the door flat with the inside of the door facing down.

**➔ IMPORTANT**

Most oven doors contain glass that can break. Do not hit the glass with pots, pans, or any other object. Scratching, hitting, jarring, or stressing the glass may weaken its structure, causing an increased risk of breakage at a later time. Do not close the oven door until all of the oven racks are fully in place.

#### To remove the oven door

1. Open oven door completely, horizontal with floor.

**Figure A**

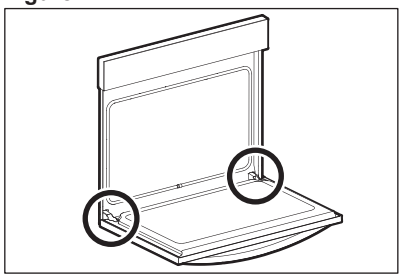

2. Pull up the lock located on each hinge support toward front of the oven until the lock stops. You may have to apply a little upward pressure on the lock to pull it up.

**Figure B**

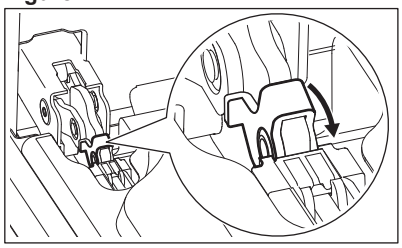

3. Grasp the door by the sides, and close the door until the door frame makes contact with the unlocked hinges.

**Figure C**

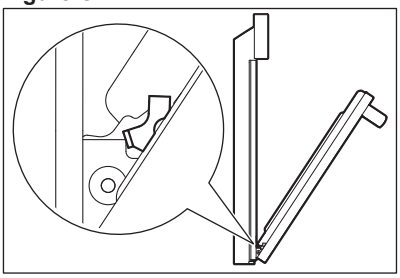

4. Pull the bottom of the door toward you while rotating the top of the door toward the appliance to completely disengage the hinge levers.

**Figure D**

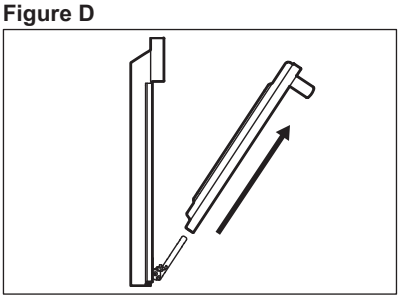

#### To replace the oven door

1. Firmly grasp both sides of oven door along the door sides. Do not use the oven door handle (Figure D).
2. Hold the oven door at the same angle as the removal position (Figure C). Carefully insert the hinge levers into the oven frame until you feel the hinge levers are seated into the hinge notches. The hinge arms must be fully seated into the hinge notches before the oven door can be fully opened.
3. Fully open the oven door, horizontal with floor (Figure A).
4. Push the door hinge locks up toward and into the oven frame on both left and right oven door hinges to the locked position (Figure B).
5. Close the oven door.

## 8. TROUBLESHOOTING

**⚠ WARNING!**

Refer to Safety chapters.

### 8.1 Oven Baking

For best cooking results, preheat the oven before baking cookies, breads, cakes, pies, pastries, etc.

There is no need to preheat the oven for roasting meat or baking casseroles.

The cooking time and temperature need to bake a product may vary from the previously owned appliance.

| Baking Problems | Possible Cause | Solution |
|---|---|---|
| Cookies and biscuits burn on the bottom. | Cookies and biscuits put into oven before oven is preheated. | Allow oven to preheat to desired temperature before placing food in oven. Choose pan size that permits at least 2" of air space. |

| Baking Problems | Possible Cause | Solution |
|---|---|---|
| Cakes too dark on top or bottom. | Cakes put in oven before oven is preheated.<br>Rack position too high or too low.<br>Oven too hot. | Allow oven to preheat to selected temperature before placing food in the oven.<br>Use proper rack position for baking needs.<br>Set oven temperature 25°F / 13°C lower than recommended. |
| Cakes not done in center. | Oven too hot.<br>Incorrect pan size.<br>Pan not centered in oven.<br>Glass cookware slow heat conductor. | Set oven temperature 25°F / 13°C lower than recommended.<br>Use pan size suggested in recipe.<br>Use proper rack position and place pan with the space on all sides of pan at least 2" / 5.1 cm.<br>Reduce temperature and increase cook time or use shiny bakeware. |
| Cakes not level. | Oven not level.<br>Pan too close to oven wall or rack overcrowded.<br>Pan warped.<br>Oven light left on while baking. | Place a marked glass measuring cup filled with water on the center of the oven rack. If the level is uneven, refer to installation instructions for leveling the oven.<br>Use proper rack position and place pan with the space on all sides of pan at least 2" / 5.1 cm.<br>Do not use dented or warped pans.<br>Do not leave the oven light on while baking. |
| Foods not done when cooking time is over. | Oven too cool.<br>Oven overcrowded.<br>Oven door opened too frequently. | Set oven temperature 25°F / 13°C higher than suggested and bake for the recommended time.<br>Make sure to remove all pans from the oven except the ones that you use for baking.<br>Open oven door only after the shortest recommended baking time. |

## 8.2 Before you Call (Solutions to Common Problems)

Let us help you troubleshoot your concern! This section will help you with common issues. If you need us, visit our website, chat with an agent, or call us. We may be able to help you avoid a service visit. If you do need service, we can get that started for you!

**Frigidaire.com** (United States)
**1-800-374-4432**

**Frigidaire.ca** (Canada)
**1-800-265-8352**

| Occurrence | Possible cause | Solution |
|---|---|---|
| Entire appliance does not operate. | Appliance not connected. | Make sure power cord is plugged properly into outlet. Check your fuse box or breaker box to make sure the circuit is active. |
| | Electrical power outage. | Check the house light to be sure. Call your local electric company for service outage information. |

### Oven Problems

| Occurrence | Possible cause | Solution |
|---|---|---|
| Poor baking results. | Many factors affect baking results. | Use proper oven rack position. Center food in the oven and space pans to allow air to circulate. Preheat the oven to the set temperature before placing food in the oven. Adjust the temperature and baking time recommended in the recipe. |
| Flames inside oven or smoking from oven vent. | Excessive spills in oven.<br>Grease of food spilled onto the oven bottom or oven cavity. | Wipe up excessive spills before turning on the oven.<br>If flames or excessive smoke are present when using broil, refer to Setting Oven Controls. |
| Oven smokes excessively when boiling. | Incorrect setting. | Refer to Setting Oven Controls. |
| | Meat to close to the broil element or burner. | Reposition the broil pan to provide proper clearance between the meat and broil element or burner. Remove excess fat from meat. Cut remaining fatty edges to prevent curling, do not cut into lean. |
| | Grease build up on oven surfaces. | Regular cleaning is necessary when you broil frequently. Grease or food splatters cause excessive smoking. |
| Oven control panel beeps and displays any **F** or **E** code error. | Oven control detected a fault or error condition. | To clear the error press the **OFF** key on the control panel. Once you clear the error code, try the bake or broil function. If the **F** or **E** code error repeats, turn off the power to the appliance and wait 5 minutes, and then repower the appliance. Set the clock with the correct time of day, and try the bake or broil function again. If the fault recurs, press the **OFF** key to clear. |
| Oven portion of appliance does not operate. | The regulator gas is **OFF**. | Make sure the regulator gas is turned **ON**. Refer to Installation Instructions. |
| | The time of day is not set. | The clock must be set in order to operate the oven. Refer to Setting Oven Controls. |
| | Desired function is not set. | Make sure the oven controls are set properly for the desired function. Refer to Setting Oven Controls and this checklist. |
| Convection fan does not rotate. | Oven door is open. | The convection fan turns off if the oven door is open when convection is active. Close the oven door.<br>On gas models, the convection fan begins to rotate about 6 minutes into the preheating process. |

### Cooktop Problems

| Occurrence | Possible cause | Solution |
|---|---|---|
| Surface element is too hot or not hot enough. | Incorrect surface control setting. | Adjust power level setting. |

| Occurrence | Possible cause | Solution |
|---|---|---|
| Cooking zone does not heat or does not heat evenly. | Incorrect surface control knob is used for the element needed. | Make sure that you use correct surface control knob for the element needed. |
| | Incorrect cookware material type is used for the induction cooking. | Make sure that you use correct cookware material type for induction cooking. If you are not sure, use a magnet to test whether the cookware type works. If a magnet sticks to the bottom of the cookware, the material type is correct for induction cooking. |
| Areas of discoloration with metallic sheen on cooktop surface. | Mineral deposits from water and food. | Remove discoloration with cleaning cream applied to the glass ceramic surface, buff with a non-abrasive cloth or sponge. Refer to Care and Cleaning. |
| Scratches or abrasions on cooktop surface. | Coarse particles, such as salt or hardened soils, between cooktop and utensils may cause scratches. | Make sure the cooktop surface and bottoms of utensils are clean before use. Small scratches do not affect cooking and become less visible with time. |
| | Cleaning materials not recommended for ceramic glass cooktop are used. | Apply cooktop cleaning creme to the ceramic surface. Buff with a non-abrasive cloth or sponge. Refer to Care and Cleaning. |
| | Cookware with a rough bottom is used. | Use smooth, flat-bottomed cookware. |
| Metal marks on the cooktop. | Sliding or scraping of metal utensils on cooktop surface. | Apply cooktop cleaning creme to the ceramic surface. Buff with a non-abrasive cloth or sponge. Refer to Care and Cleaning. |
| Brown streaks or specks on cooktop surface. | Boil overs are cooked onto the surface. | When cooktop is cool, use a razor blade scraper to remove the soil. Refer to Care and Cleaning. |

### Other Problems

| Occurrence | Possible cause | Solution |
|---|---|---|
| Appliance is not level. | Poor installation. | Place the oven rack in the center of the oven. Place a level on the oven rack. Adjust the leveling legs at the base of the appliance until the rack is level. |
| | Kitchen cabinet alignment may make range appear not level. | Make sure cabinets are square and have sufficient room for appliance clearance. |
| Appliance is not level. | The floor is sagging or sloping. | Make sure the floor is level, strong, and stable enough to adequately support the range. Contact a carpenter to resolve the situation. |
| Cannot move appliance easily. Appliance must be accessible for service. | Cabinets not square or built in too tightly. Carpet interferes with appliance. | Contact the builder or installer to make the appliance accessible.<br>Provide sufficient space so the appliance can be lifted over carpet. Installation over carpet is not advised. Refer to Installation Instructions for guidelines specific to your appliance. |
| Oven light does not work. | The oven light is not secured in the socket. | Make sure the oven light is secure in the socket. Refer to Care and Cleaning. |

## 9. LIMITED WARRANTY

Your appliance is covered by a one year limited warranty. For one year from your original date of purchase, Electrolux will pay all costs for repairing or replacing any parts of this appliance that prove to be defective in materials or workmanship when such appliance is installed, used and maintained in accordance with the provided instructions.

### Exclusions

This warranty does not cover the following:

1. Products with original serial numbers that have been removed, altered or cannot be readily determined.
2. Product that has been transferred from its original owner to another party or removed outside the USA or Canada.
3. Rust on the interior or exterior of the unit.
4. Products purchased “as-is” are not covered by this warranty.
5. Food loss due to any refrigerator or freezer failures.
6. Products used in a commercial setting.
7. Service calls which do not involve malfunction or defects in materials or workmanship, or for appliances not in ordinary household use or used other than in accordance with the provided instructions.
8. Service calls to correct the installation of your appliance or to instruct you how to use your appliance.
9. Expenses for making the appliance accessible for servicing, such as removal of trim, cupboards, shelves, etc., which are not a part of the appliance when it is shipped from the factory.
10. Service calls to repair or replace appliance light bulbs, air filters, water filters, other consumables, or knobs, handles, or other cosmetic parts.
11. Surcharges including, but not limited to, any after hour, weekend, or holiday service calls, tolls, ferry trip charges, or mileage expense for service calls to remote areas, including the state of Alaska.
12. Damages to the finish of appliance or home incurred during installation, including but not limited to floors, cabinets, walls, etc.
13. Damages caused by: services performed by unauthorized service companies; use of parts other than genuine Electrolux parts or parts obtained from persons other than authorized service companies; or external causes such as abuse, misuse, inadequate power supply, accidents, fires, or acts of God.

### Disclaimer of implied warranties; Limitation of remedies

CUSTOMER'S SOLE AND EXCLUSIVE REMEDY UNDER THIS LIMITED WARRANTY SHALL BE PRODUCT REPAIR OR REPLACEMENT AS PROVIDED HEREIN. CLAIMS BASED ON IMPLIED WARRANTIES, INCLUDING WARRANTIES OF MERCHANTABILITY OR FITNESS FOR A PARTICULAR PURPOSE, ARE LIMITED TO ONE YEAR OR THE SHORTEST PERIOD ALLOWED BY LAW, BUT NOT LESS THAN ONE YEAR. ELECTROLUX SHALL NOT BE LIABLE FOR CONSEQUENTIAL OR INCIDENTAL DAMAGES SUCH AS PROPERTY DAMAGE AND INCIDENTAL EXPENSES RESULTING FROM ANY BREACH OF THIS WRITTEN LIMITED WARRANTY OR ANY IMPLIED WARRANTY. SOME STATES AND PROVINCES DO NOT ALLOW THE EXCLUSION OR LIMITATION OF INCIDENTAL OR CONSEQUENTIAL DAMAGES, OR LIMITATIONS ON THE DURATION OF IMPLIED WARRANTIES, SO THESE LIMITATIONS OR EXCLUSIONS MAY NOT APPLY TO YOU. THIS WRITTEN WARRANTY GIVES YOU SPECIFIC LEGAL RIGHTS. YOU MAY ALSO HAVE OTHER RIGHTS THAT VARY FROM STATE TO STATE.

### If You Need Service

Keep your receipt, delivery slip, or some other appropriate payment record to establish the warranty period should service be required. If service is performed, it is in your best interest to obtain and keep all receipts. Service under this warranty must be obtained by contacting Electrolux at the addresses or phone numbers below.

This warranty only applies in the USA and Canada. In the USA, your appliance is warranted by Electrolux Major Appliances North America,

a division of Electrolux Home Products, Inc. In Canada, your appliance is warranted by Electrolux Canada Corp. Electrolux authorizes no person to change or add to any obligations under this warranty. Obligations for service and parts under this warranty must be performed by Electrolux or an authorized service company. Product features or specifications as described or illustrated are subject to change without notice.

**USA**

**1-800-374-4432**

Frigidaire

10200 David Taylor Drive

Charlotte, NC 28262

**Canada**

**1-800-265-8352**

Electrolux Canada Corp.

5855 Terry Fox Way

Mississauga, Ontario, Canada L5V 3E4

frigidaire.com

A23936703 (October 2024)