COOKERS PROFESSIONAL

U (P/N) 30	29 7/8" (W) x 25 19/32" (D) x 36 1/2" (H)
U (P/N) 36	35 7/8" (W) x 25 19/32" (D) x 35 55/64"- 36 7/32"] (H)
U (P/N) 361	35 7/8" (W) x 25 19/32" (D) x 35 55/64"- 36 7/32"] (H)
U (P/N) D36	35 7/8" (W) x 25 19/32" (D) x 35 55/64"- 36 7/32"] (H)
U (P/N) D40	39 7/8" (W) x 25 19/32" (D) x 35 55/64"- 36 7/32"] (H)
U (P/N) 48	47 7/8" (W) x 25 19/32" (D) x 35 55/64"- 36 7/32"] (H)
U (P/N) 60	59 7/8" (W) x 25 19/32" (D) x 35 55/64"- 36 7/32"] (H)

U (P/N) I304	29 7/8" (W) x 25 19/32" (D) x 35 55/64" (H)
U (P/N) I366	35 7/8" (W) x 25 19/32" (D) x 35 55/64"- 36 7/32"] (H)
U (P/N) I3616	35 7/8" (W) x 25 19/32" (D) x 35 55/64"- 36 7/32"] (H)
U (P/N) ID366	35 7/8" (W) x 25 19/32" (D) x 35 55/64"- 36 7/32"] (H)
U (P/N) DI406	39 7/8" (W) x 25 19/32" (D) x 35 55/64"- 36 7/32"] (H)
U (P/N) I486	47 7/8" (W) x 25 19/32" (D) x 35 55/64"- 36 7/32"] (H)

Cookers characteristics

These warnings refer to different models of cookers.
Be sure that you have correctly identified the model that you possess (see the rating plate).

EN | User's manual

ILVE

C ETL LISTED US
Intertek

IMPORTANT - PLEASE READ AND FOLLOW

- Before beginning, please read these instructions completely and carefully.
- Do not remove permanently affixed labels, warnings, or plates from the product. This may void the warranty.
- Please observe all local and national codes and ordinances.
- Please ensure that this product is properly grounded.
- The installer should leave these instructions with the consumer who should retain them for local inspector's use and for future reference.

⚠ WARNING

Tipping hazard

To reduce the risk of the appliance tipping, it must besecured by a properly installed anti-tip bracket(s). Verify that the anti-tip bracket has been properly attached to the floor or wall as directed in the installation instructions. After removing the drawer, or the panel under the door, using a flashlight, verify that the anti-tip bracket has been installed properly.



- THIS RANGE CAN TIP
- INJURIES TO PERSONS CAN RESULT
- INSTALL ANTI-TIP DEVICE PACKED
- WITH RANGE
- SEE INSTALLATION INSTRUCTIONS

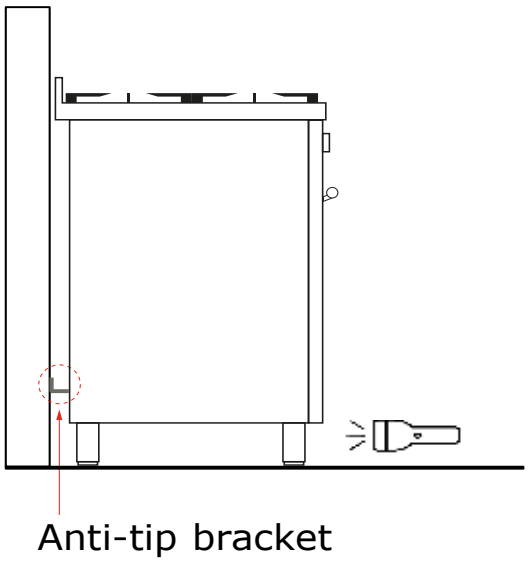

WARNING If the informations in this instructions is not followed exactly, a fire or explosion may result causing property damage, personal injury or death.

— Do not store or use gasoline or other flammable vapors and liquids in the vicinity of this or any other appliance.

— WHAT TO DO IF YOU SMELL GAS:

- **Do not try to light any appliance.**
- **Do not touch any electrical switch.**
- **Do not use any phone in your building.**
- **Immediately call your gas supplier from a neighbor's phone.**
- **Follow the gas supplier's instructions.**
- **If you cannot reach your gas supplier, call the fire department.**

— Installation and service must be performed by a qualified installer, service agency or the gas supplier.

IMPORTANT - PLEASE READ AND FOLLOW

⚠ WARNING

- NEVER use this appliance as a space heater to heat or warm the room. Doing so may result in carbon monoxide poisoning (only for GAS cooking).
- IF YOU OR SOMEONE IN YOUR FAMILY HAS A PACEMAKER, PLEASE CONSULT WITH A PHYSICIAN BEFORE USING. Due to high operating frequencies, a pacemaker may not function properly due to electromagnetic transmissions.
- Keep appliance area clear and free from combustible materials, gasoline and other flammable vapors and liquids.
- A child or adult can tip the range and be killed.
- Install the anti-tip device to the structure and/or the range. Verify the anti-tip device has been properly installed and engaged [2 options are available: please refer to the pictures at page 10].
- Engage the range to the anti-tip device by [2 options are available: please refer to the pictures at page 10]. Ensure the anti-tip device is re-engaged when the range is moved.
- Re-engage the anti-tip device if the range is moved. Do not operate the range without the anti-tip device in place and engaged.
- See installation instructions for details.
- If the enclosed hardware cannot be utilized, please refer to a qualified installer to properly fasten the appliance so that it does not tip over.
- Failure to do so can result in death or serious burns to children or adults.
- Installation must conform with local codes or in absence of codes, the National Fuel Gas Code ANSIZ223.1/ NFPA 54 latest edition. Electrical installation must be in accordance with the National Electrical Code, ANSI/ NFPA70 latest edition and/or local codes. IN CANADA: Installation must be in accordance with the current CAN/ CGA-B149.1 National Gas.
- Installation Code or CAN/CGA-B 149.2, Propane. Installation Code and/or local codes. Electrical installation must be in accordance with the current CSA C22.1 Canadian Electrical Codes Part 1 and/or local codes.
- Installation of any gas –fired equipment should be made by a licensed plumber . A manual gas shut-off valve must be installed in the gas supply line ahead of the oven in the gas stream for safety and ease of service.
- In Massachusetts: All gas products must be installed by a “Massachusetts” licensed plumber or gasfitter . A “T” handle type manual gas valve must be installed in the gas supply line to this appliance. The manufacturer will not be responsible for any damage to property or to persons caused by incorrect installation or improper use of the appliance.
- The manufacture reserves the right to make changes to its products when considered necessary and useful, without affecting the essential safety and operating characteristics.
- This appliance has been designed for non-professional, domestic use only.
- This appliance must be used only for the purposes for which it was intended. Any other use is incorrect and therefore dangerous.
- Possible hazards may result from using this appliance for storage space.
- Appliances are not intended for manufactured (mobile) home installation .
- Misuse of appliance doors or drawers such as stepping, leaning or sitting on them can result in damage or personal hazards or injuries.
- DO NOT TOUCH HEATING ELEMENTS OR INTERIOR SURFACES OF OVEN – Heating elements may be hot even though they are dark in color. Interior surfaces of an oven become hot enough to cause burns. During and after use, do not touch, or let clothing or other flammable materials contact heating elements or interior surfaces of oven until they have had sufficient time to cool. Other surfaces of the appliance may become hot enough to cause burns – among these surfaces are (identification of surfaces – for example, oven vent openings and surfaces near these openings, oven doors, and windows of oven doors).
- Care must be taken to prevent aluminum foil and meat probes from contacting the heater elements.

⚠ WARNING

Never Operate the Top Surface Cookìng Section of this Appliance Unattended

- **Failure to follow this warning statement could result in fire, explosion, or burn hazard thai could cause property damage, persona! injury, or death.**
- **If a fire should occur, keep away from the ap plìance and immediately call your fire department.**

DO NOT ATTEMPT TO EXIT AN OIL / GREASE FIRE WITH WATER.

IMPORTANT INSTRUCTION

All Appliances:

CAUTION: Do Not Leave Children Alone - Children should not be left alone or unattended in area where appliance is in use. They should never be allowed to sit or stand on any part of the appliance. Do not store items of interest to children above or at the back of this appliance, as they could climb on the appliance to reach items and be injured.

Wear Proper Apparel - Loose-fitting or hanging garments should never be worn while using the appliance.

User Servicing - Do not repair or replace any part of the appliance unless specifically recommended in the manual.

All other servicing should be referred to a qualified technician.

Storage in or on Appliance – Flammable materials should not be stored in an oven or near surface units.

Do Not Use Water on Grease Fires - Smother fire or flame or use dry chemical or foam type extinguisher .

Use Only Dry Potholders - Moist or damp potholders on hot surfaces may result in burns from steam. Do not

let potholder touch hot heating elements. Do not use a towel or other bulky cloth.

When using this appliance, do not touch grates, burner caps, burner bases or any other parts in proximity to the flame. These components may be hot enough to cause burns. Never leave this appliance unattended when in use. Boilovers and greasy spills may smoke or ignite Do not heat unopened food containers, such as baby food jars and cans. Pressure build-up may cause the container to burst and cause injury. Before performing service, shut off gas by closing the gas shut-off valve and shut off electricy to this appliance For safety when cooking, set burner controls so flame does not extend beyond the bottom of pan.

- Wear proper apparel. Loose-fitting or hanging garments should never be worn while using this appliance.
- Use extreme caution when moving a grease kettle or disposing of hot grease.
- Clean only those parts listed in this guide.
- Do not repair or replace any part of this appliance unless specifically recommended in literature accompanying this appliance.
- Do not obstruct the flow of air to ensure proper combustion and ventilation.
- IMPORTANT: Do not install a ventilation system that blows air downward toward this gas cooking appliance. This type of ventilation system may cause ignition and combustion problems with this gas cooking appliance resulting in personal injury or unintended operation.
- Proper Installation – Be sure your appliance is properly installed and grounded by a qualified technician.
- Never Use Your Appliance for Warming or Heating the Room.

Ovens:

1. Use Care When Opening Door - Let hot air or steam escape before removing or replacing food.
2. Do Not Unopened Food Containers - Build up of pressure may cause container to burst and results in injury.
3. Keep Oven Vent Ducts Unobstructed.
4. Placement Of Oven Racks - Always place oven racks in desired location while oven is cool. If rack must be moved while oven is hot, do not let potholder contact hot heating element in oven.
5. Do Not Leave Children Alone – Children should not be left alone or unattended in area where appliance is in use. They should never be allowed to sit or stand on any part of the appliance.
6. Wear Proper Apparel – Loose-fitting or hanging garments should never be worn while using the appliance.

⚠ CALIFORNIA PROPOSITION 65

WARNING : this product can expose you to chemicals including lead and cadmium, which are known to the State of California to cause cancer and birth defects or other reproductive harm. For more information go to:
www.P65Warnings.ca.gov

⚠ WARNING

This equipment complies with part 18 of the FCC Rules.
Person with a pacemaker or similar medical device should exercise caution when using or standing near an induction unit while it is in operation. The electromagnetic field may affect the working of the pacemaker or similar medical device. It is advisable to consult your doctor or the pacemaker manufacturer about your particular situation.

Supplier's Declaration of Conformity
47 CFR § 2.1077 Compliance Information

Responsable Party -ILVE USA
2215 EAST 5TH STREET
BROOKLYN, NY 11223
0018008294933
WWW.ILVE.COM

FCC Compliance Statement
This device complies with Part 18 of the FCC Rules

INSTRUCTIONS FOR USE

Induction appliance

- Use Proper Pan Size – This appliance is equipped with one or more surface units of different size. Select utensil shaving flat bottoms large enough to cover the surface unit heating element. Proper ratio of utensil to cooking zone will also improve efficiency.
- Protective Liners – Do not use aluminum foil to line oven bottom, installation of these liners may result in a risk of electric shock, or fire.
- Avoid spilling water or other liquids onto the Induction Cooker, and never immerse the unit in water.
- Do not touch the Ceramic Plate immediately after cooking - it may be hot from residual heat from the utensil.
- Do not place or store very heavy objects on the ceramic plate.
- The heating area is warmed up from the heat of the pan. To avoid injuries (burning) do not touch the heating
- area.
- Do not insert any piece of paper, cardboard, cloth, etc. Between the pan and the heating area, as this might initiate a fire.
- As metallic objects are heated up very quickly when placed on the operating heating area, do not place any otherobjects (closed cans, aluminium foil, cutlery, jewelry, watches etc.) on the induction cooker.
- Aluminium foil and plastic vessels are not to be placed on the hot surface.
- The surface must not be used for storage.
- Do not place credit cards, phone cards, cassette tapes, or other objects that are sensitive to magnetism on the ceran plate.
- Do not use pans with an uneven bottom. This might cause internal damage.
- If the supply cord is damaged, it must be replaced by the manufacturer, its service agent or a similarly qualified person in order to avoid a hazard.
- Do Not Cook on Broken Cook-Top- Il cook-top should break, deaning sotutioos and spillovers may penetrate the broken cook-top and aeate a risi< of electric shock. Cootact a qualified technician immediately.
- Clean cook-top with caution — if a wet sponge or cloth is used to wipe spills on a hot cooking area, be careful to avoid steam burn. some cleaners can produce noxious fumes if applied to a hot surface.
- Do not place metallic objects such as knives, forks, spoons, and lids on the cooktop surface since they can get hot
- DO NOT TOUCH SURFACE UNITS OR AREAS NEAR UNITS – Surface units may be hot even though they are dark in color. Areas nearsurface units may become hot enough to cause burns. During and after use, do not touch, or let clothing or other flammable materials contact surface units or areas near units until they have had sufficient time to cool. Among these areas is the glass surface of the cooktop.

INSTALLATION INSTRUCTIONS

- This appliance shall only be installed by an authorized person. This appliance shall be installed in accordance with the manufactures installation instructions, IMPORTANT: this appliance must be installed in accordance with the norms in force of the country concerned.
- The installation of this appliance must conform to local codes and ordinances. In the absence of local codes.
- Installations must conforms to American National Standards, National Fuel Gas Code ANSI Z223.1-NFPA54.
- If local codes permit, a flexible metal appliance connection with the new AGA or CGA certifi ed design, max. 5 feet (1,5m) long, ½" I.D. recommended for connecting this cooktop to the gas supply line. Do not bend or damage the fl exible connector when moving the cooktop. The pressure regulator has ½" female pipe thread. You will need to determine the fi tting required, depending on the size of your gas supply line, the fl exible metal connector and the shutoff valve.
- The appliance , when installed, must be electrically grounded in accordance with local codes or, in absence of local codes, with the National Electrical Code, ANSI/ NFPA 70, CSA C22.1-02.
- The appliance and its individual shut off valve must be disconnected from the gas supply piping system during any pressure testing of that system at test pressure in excess of ½psi (3,5kPa).
- The appliance must be isolated from the gas supply piping system by closing its individual manual shutoff valve during any pressure testing of the gas supply piping system at test pressure equal to or less than ½psi (3,5kPa).
- For use with a pressure regulator. The regulator supplied must be used with this appliance; it shall be properly installed in order to be accessible when appliance is installed in definitive position.
- The gas appliance pressure regulator must be set for the gas with which the appliance is used.
- This appliance can be used with Natural gas and Propane. It is shipped from the factory adjusted for use with Natural gas: CONVERSION FIXED ORIFICES ARE LOCATED IN THE LITERATURE PACK SUPPLIED WITH THE UNIT.
- Injectors kit for the change of type of gas are contained inside the package jointly with the hob installation kit and Instruction booklet. The maximum inlet gas supply pressure incoming to the gas appliance pressure regulator is 14" water column (5kPa). The minimum gas supply pressure for checking the regulator setting shall be at least 1"w.c.(249Pa) above the inlet specifi ed manifold pressure to the appliance (this operating pressure is 5"w.c. for Natural Gas and 10"w.c. for Propane.All opening and holes in the wall and fl oor, back and under the appliance shall be sealed before installation of the appliance.
- ATTENTION: A manual valve shall be installed in an accessible location in the gas line external to the appliance for the purpose of turning on or shutting off gas to the appliance.
- WARNING: Do not use aerosol sprays in the vicinity of this appliance while it is in operation.
- The appliances should not be installed with a ventilation system that blows air downward toward the range.

WARNING
Before removing the appliance disconnect the electric power supply cable and close the relevant shut off valve. Make sure that the electric power supply cable is not damaged during cleaning/maintenance operations. When repositioning the appliance make sure that the anti-tip device is correctly fitted again as before removal.

NOTE 1:possible risks may result from abnormal usage, including excessive
loading of the oven door.
NOTE 2: reinstall the appliance in accordance with the manufacturer's
instructions to avoid the risk of tip-over

WARNING
An air curtain or other overhead range hood, which operates by blowing a downward airflown onto a range, shall not be used in conjunction whit this gas range.

Product Model/Serial Label
and Rating Label Locations

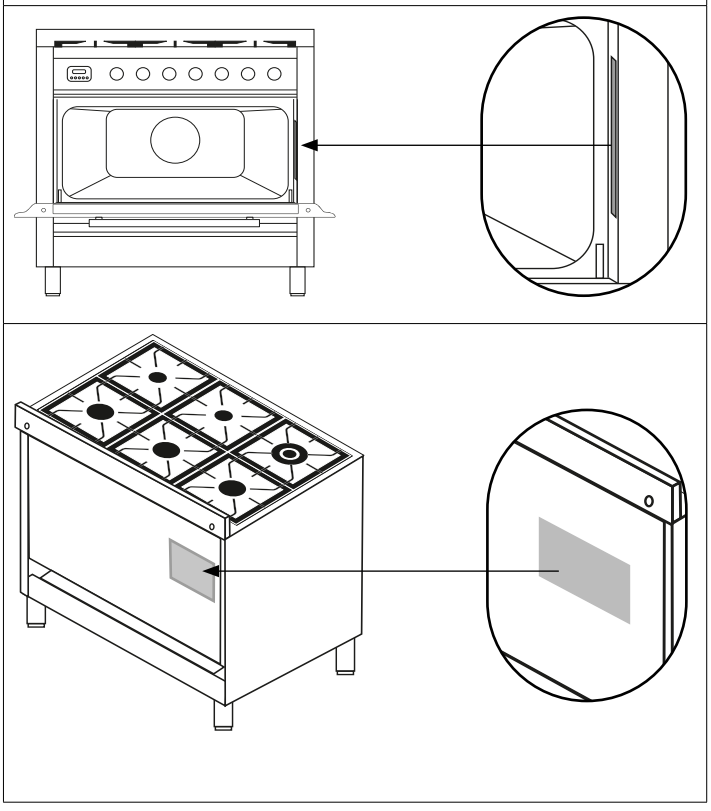

INSTALLATION INSTRUCTIONS

Instruction for base feet assembly

Legs are packed in carton box. Legs should be installed near to where the appliance is to be used, as they are not secure for long transit. After unpacking the range, raise it about a foot to remove the bottom shipping skid. Keep the unit raised to allow legs to be screwed into their couplings and lower it gently to keep any undue strain from the legs and internal mounting hardware. It is strongly recommended that a pallet or lift jack be used rather than tilting.

Professional

1. Screw partially bolt (E) into the base foot (F).
2. Insert base foot (G) into the hole (Ga), move in to the slot (Gb) and screw completely bolt (E).

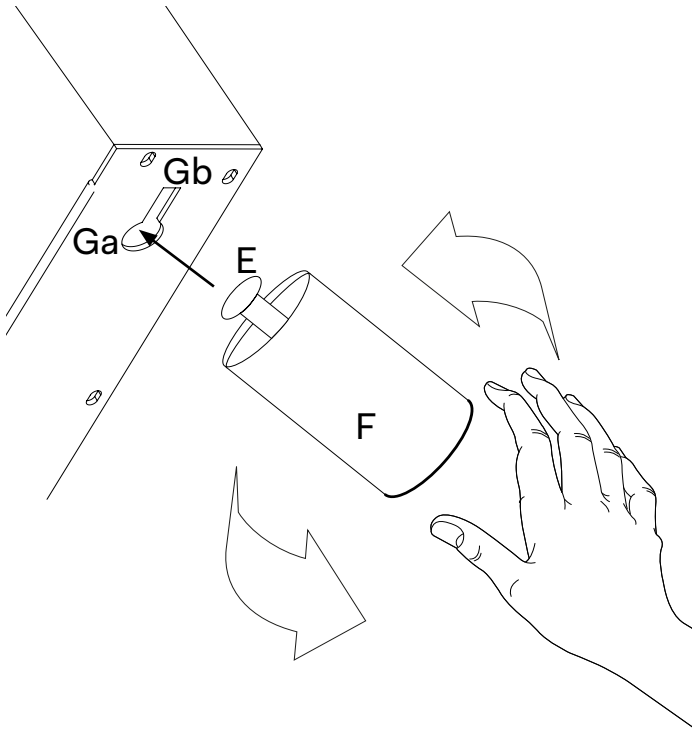

PRESSURE GAS REGULATOR INSTALLATION INSTRUCTION

Pressure gas regulator is supplied with the appliance. It is stored in the oven.

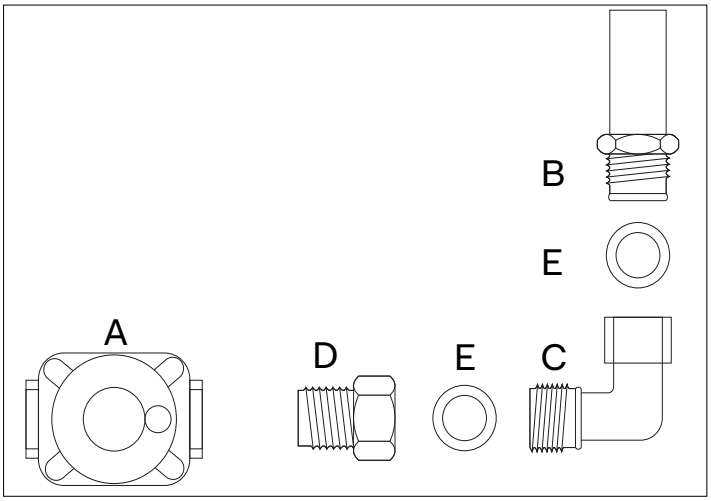

1. Unscrew part “B” from part “C”.
2. Screw part “C” into part “D”. Use a suitable gasket for this connection.
3. Screw part “D” into part “A”.

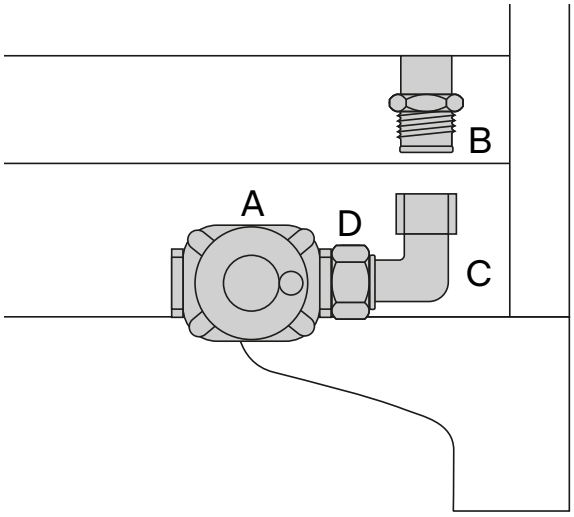

4. Screw “A”+”D”+”C” part into “B” part.

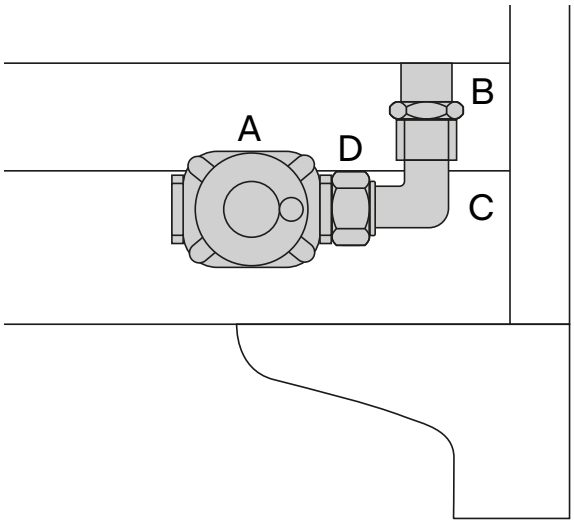

NOTE: Tor connection “B”+”C”+”D” PART USE “E” GASKET

HOW TO INSTALL THE ANTI-TIP BRACKET

⚠ WARNING

A child or adult may tip over the device and be killedInstall the anti-tip device on the structure and/or polygon (see pictures for details).

OPTION 1: wall bracket

1. DUnpack the kitchen, mount the feet and adjust the height.
2. Measure the height from the floor to the top edge of the rear cross bar and add 15 mm.
3. Mark the total height on the back wall in the center of the width of the kitchen. Drill two holes and install the mounting bracket.
4. CAUTION: Make sure the stove is leaning against the back wall to prevent it from tipping over.

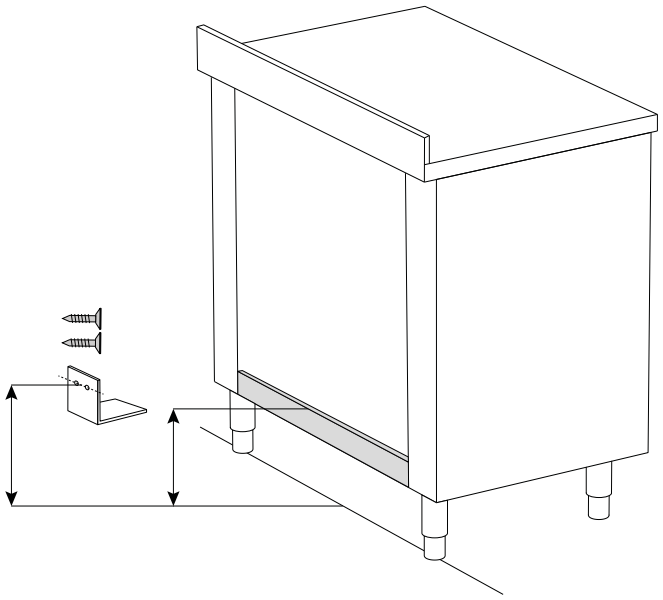

OPTION 2: floor mounted bracket

1. **ATTENTION:** in this case 2 brackets are needed
2. Hook the apparatus onto the anti-tip device as explained in the picture.
3. Reinsert the anti-tip device if the apparatus is moved.
4. See pictures for details.
5. Failure to follow this procedure may result in death or serious burns to children or adults..

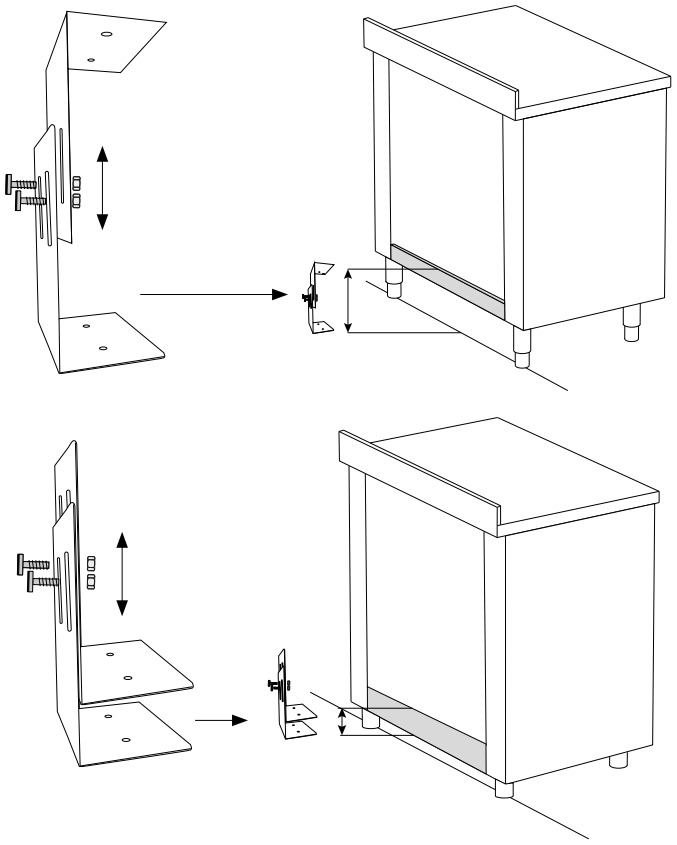

BACKGUARD INSTALLATION INSTRUCTION

Please follow the following installation instructions in sequence:

- Place the backguard and fasten it with the two screws as shown in figure.
- Please refer to a qualified installer in case the enclosed hardware cannot be utilized.

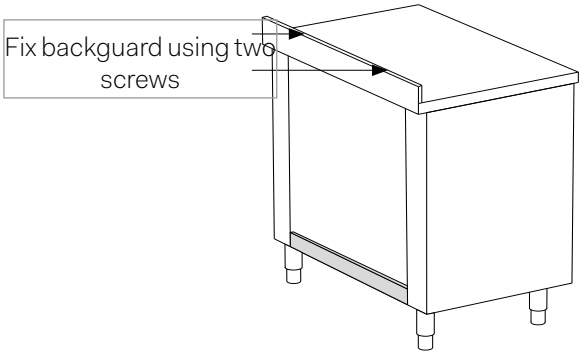

MINIMUM SPACING FROM COMBUSTIBLE CONSTRUCTION

1. This range shall be installed directly adjacent to existing [33 15/32" - 36 20/32"] high base cabinets.
2. IMPORTANT: The top border of the worktop should be at the same level of the adjacent cabinets counter top. This may be accomplished by raising using the adjustment spindles on the legs.
3. The range CANNOT be installed directly adjacent to sidewall, as cabinets, appliances, or other side vertical surface above 36 20/32" high. There must be a minimum of 5" side clearance.
4. Within the side clearance to combustible vertical surfaces above 36 20/32", the maximum wall cabinet depth must be 13" and wall cabinets within this side clearance within this side clearance must be 18" above the 36" high countertop.
5. Distance A cannot be less than width of the appliance.
6. Distance G this range shall be installed directly adjacent to back wall (zero clearance).
7. 36'' minimum clearance between the top of the cooking surface and the bottom of an unprotected wood or metal cabinet (B).
8. Minimum horizontal distance between overhead cabinets installed to either side of the appliance shall not be less than the nominal width of the appliance.
9. This appliance is for zero clearance between adjacent combustible construction below the cooking surface and back and sides of the appliancde.

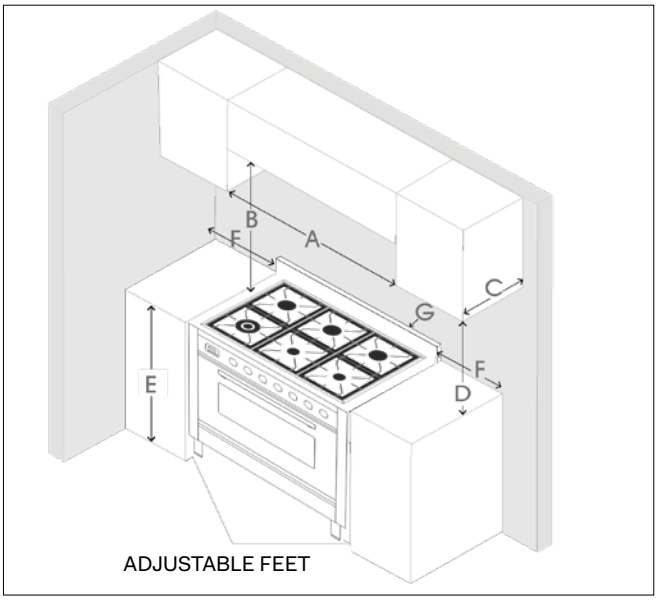

ADJUSTABLE FEET

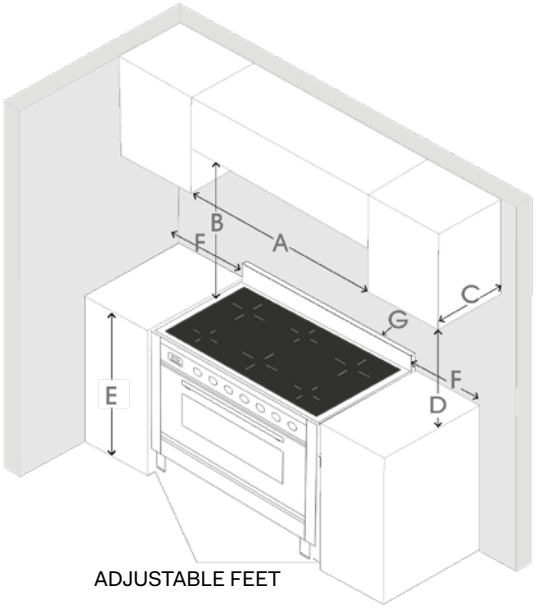

ADJUSTABLE FEET

⚠ CAUTION

Burn hazard

To avoid risk of personal injury; the use of cabinets for storage above the appliance may result in a potential burn hazard. Combustible items may ignite, metallic items may become hot and cause burns. If a cabinet storage is to be provided the risk can be reduced by installing a range hood that projects horizontally a minimum 5" (12.7 cm) beyond the bottom of cabinets. 390mm= 152364in

A	≥ [35 7/8" – 47 7/8"]
B	36" (91,5cm)
C	13" (33cm)
D	18" (45,7cm)
E	36 1/2" (92,5cm)
F	5" (12,7cm)

Electrical and gas connection

Rear view

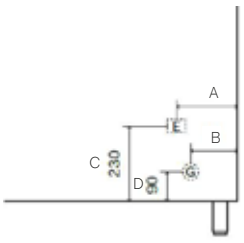

Mod. / mm	A	B	C (230)	D (90)
UP30	5 3/64	26 27/64	7 3/32	4 49/64
UP36	7 23/64	6 31/32	6 47/64	4 13/32
UPD36	4 9/16	4 1/16	6 47/64	4 13/32
UP361	7 23/64	6 21/32	6 47/64	4 13/32
UPD40	4 3/8	3 55/64	6 47/64	4 13/32
UP48	5 43/64	5 5/32	6 47/64	4 13/32
UP60	7 9/16	6 27/32	6 47/64	4 13/32

ELECTRICAL CONNECTION

The appliance shall be connected to a single phase electric line rated at 120/240Vac and 60Hz frequency.

The appliance is equipped at the factory with a flexible hose . Inside the flexible hose you have 4 cables: green cable must be connected to the ground, white cable (NEUTRAL), red and black cables: supply wire (F – F1). Check the electrical sketch available at the end in our instructions booklet.Electric power absorption values for each model are shown in the Electrical and Gas Power Table enclosed.

Before connecting the appliance to the electric network, follow the instructions below:

1. fuse and electric supply installation of your home must bear the load of the appliance (see registration label).
2. the power supply system must have an efficient earth connection.
3. the outlet or multiple-switch, with a minimum1/8" (3mm) contact opening, has to be easily reached once the appliance has been installed.

Induction appliance

The connection of the electrical supply must be done by approved installation contractors in accordance with specific National and Local installation standards in conformity with all safety regulations. The warning signs and rating plates on the appliances must strictly be followed.

This unit is manufactured for a polarized, grounded 120/240 volt 60Hz (2 phases 6 AWG, 1 neutral 8 AWG, 1 ground 8 AWG 0with plug).

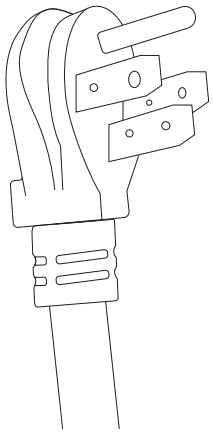

Check and ensure that the supply voltage and the line current matches the specifications given on the rating plate.

Before connecting the appliance to the electric network, follow the instructions below:

4. fuse and electric feeding installation of your home must support the load of the appliance (see registration label);
5. power supply system must be properly grounded;
6. the outlet or multiple-switch, with 1"3/8 inch diameter connection opening, has to be easily reached once the appliance has been installed;
7. the power supply cable should not reach a 120°F temperature.

⚠ WARNING

If the voltage is wrong, the cooker can be damaged.

⚠ WARNING

Dangerous electric voltage inside! DO NOT OPEN induction unit.

⚠ WARNING

Electrical Grounding Instructions This appliance is equipped with a (four-prong) grounding plug for your protection against shock hazard and should be plugged directly into a properly grounded receptacle. Do not cut or remove the grounding prong from this plug

⚠ CAUTION

Risk of Electric Shock. If the cord or plug becomes damaged, disconnect the appliance from the power supply and replace only with a cord or plug of the same type

GAS CONNECTION

All gas connections must be made according to national and local codes. This gas supply (service) line must be the same size or greater than the inlet line of the appliance. This range uses a ½"NPT inlet. Sealant on all pipe joints must be resistant to Propane.

1. Manual Shut-off Valve:

- This installer-supplied valve must be installed in the gas service line ahead of the appliance in the gas stream and in a position where it can be reached quickly in the event of an emergency. The manual shut-off valve shall be installed properly in order to be accessible when appliance is installed in its final position. In Massachusetts: A 'T' handle type manual gas valve must be installed in the gas supply line to this appliance.

2. Pressure Regulator:

- All heavy duty, commercial type cooking equipment must have a pressure regulator on the incoming service line for safe and efficient operation, since service pressure may fluctuate with local demand. The pressure regulator is supplied separately with the appliance; regulator has two female threads ½" NPT ; it shall be installed properly in order to be accessible when appliance is installed in its final position position.
- This range can be used with Natural or Propane gas. It is shipped from the factory adjusted for use with natural gas. The orifice hoods must be screwed snug when Propane gas is used(see Propane conversion).
- The appliance, its individual shut-off valve, and pressure regulator must be disconnected from the gas supply piping system during any pressure testing of that system at pressure in excess of 1/2psig(3.45kPa).
- The appliance must be isolated from the gas supply piping system by closing its individual manual shut-off valve during any pressure testing of gas supply piping system at test pressures equal to or less than 1/2psig(3.45kPa).

3. Flexible Connections:

- If the unit is to be installed with fl exible couplings and/or quick disconnect fittings, the installer must use heavy duty, AGA design-certifi +ed commercial flexible connector of at least ½"(1.3cm)ID NPT(with suitable strain relieves) in compliance with ANSI Z21.41 and Z21.69 standards.
- In Massachusetts: The unit must be installed with a 36" (3-foot) long flexible gas connector.
- In Canada: CAN 1-6.10-88 metal connectors for gas appliances and CAN 1-6.9M79 quick disconnect device for use with gas fuel.

CAUTION: Leak testing of the device should be performed in accordance with the manufacturer's instructions. Before turning on the oven, always check for leaks with a soapy water solution of another acceptable method.

DO NOT USE AN OPEN FLAME TO CHECK FOR LEAKS!

PERFORMANCE CHECKLIST

All burners are tested before leaving the factory. There are no adjustments for the burners if connected according to the information on the rating plate. Check each burner for proper operations. Flames should be blue in all settings. If service is required, contact your dealer for the name of their authorized service agency. Gas conversions and initial installation are not responsibility of the manufacturer.

The installer should carry out the following performance checks. Refer to instructions below.

1. Check surface burner ignition.
2. Check low fl ame adjustment
3. Check for gas leaks (odors) at all gas connections.

REQUIREMENTS

Room ventilation – Location and venting.

ATTENTION: A exhaust fan may be used with the appliance; in each case it shall be installed in conformity with the national standards in force.

ATTENTION: Exhaust hood operation may affect other vented appliances; in each case it shall be installed in conformity with the national standards in force.

CONVERSION TO DIFFERENT TYPES OF GAS

Any conversion required must be performed by your dealer or a qualified licensed plumber or gas service company.

Please provide the service person with this manual before work is started on the range.(Gas conversions are the responsibility of the dealer or end user.)

CAUTION

Before proceeding with the conversion, shut off the gas supply to the appliance prior to disconnecting the electr ical power.

The appliance is supplied for use with a certain type of gas; if this has to be varied, you must change the burner injectors, adjust the minimum gas flow.

Before carrying out these operations you must disconnect the electric power supply of the cooker to avoid accidental contacts.

Before carrying out any maintenance work, disconnect the appliance from the gas and electric supply.

ADJUSTMENT OF THE PRESSURE REGULATOR FOR USE WITH DIFFERENT TYPE OF GAS

The pressure regulator supplied with the appliance is a convertible type pressure regulator, suitable for use with natural gas at a nominal outlet pressure of 5" water column or with propane at a nominal outlet pressure of 10" water column. It is factory pre-arranged to operate with natural gas.

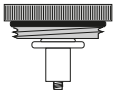

If converting from natural gas to propane, it is also necessary to adjust the bypass orifice. The bypass orifice adjustment screw must be fully screwed in.

To convert the regulator for use with the other gas (different from the one for which it is pre-arranged), simply perform the following steps:

1. Unscrew the upper metal stopper of the regulator.

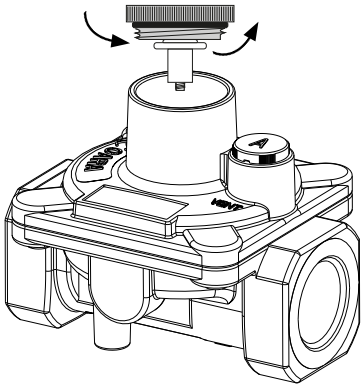

2. Unscrew by hand the white plastic piece screwed under the above mentioned metal stopper.

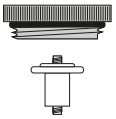

3. For propane screw it back in the opposite direction under the metal stopper.



4. Screw the metal stopper back into its original position on the regulator. In this way, the gas regulator is converted for use with the other gas/pressure.

PRESSURE REGOLATOR

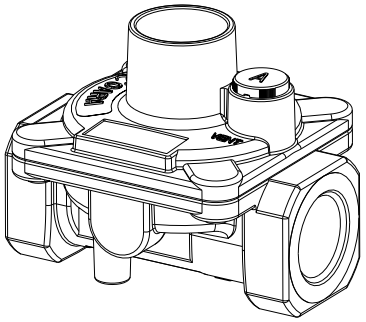

PRESSURE REGOLATOR

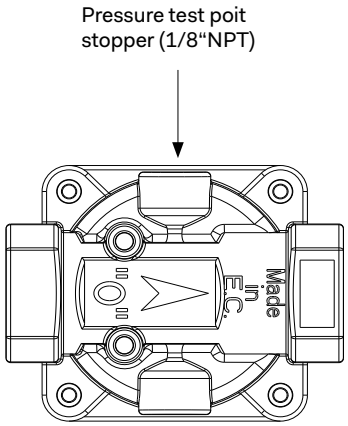

See the table below for gas supply pressure requirements.

Gas supply specifications			
Gas type	Manifold pressure * (WC)	Min. Gas Supply Pressure (WC)	Max. Imput Pressure
Natural	5	6	1/2 psi
Propane	10	11	1/2 psi

If the line pressure is in excess of that amount, a step down regulator will be required.

The appliance must be disconnected from the GAS supply piping system during any pressure testing of that system.

CHANGING THE INJECTORS

BURNER	GAS	IMPUT RATE [Btu/h]	ORIFICE SIZE (1/100) mm	SIMMER RATE [Btu/h]	BY-PASS ORIFICE SIZE (1/100) mm
SR	NATURAL (A)	7000	120	1400	Adj.*
R	NATURAL (A)	10500	145	2000	Adj.*
DUAL	NATURAL (A)	25000	75+220	6000	Adj.*
DUAL (only AUX)	NATURAL (A)	2800	75	900	Adj.*
P	NATURAL (A)	10500	145	3100	Adj.*
CDF	NATURAL (A)	5500	110	/	/
SR	PROPANE (E)	7000	7000	75	32
R	PROPANE (E)	10500	10500	90	40
DUAL	PROPANE (E)	25000	25000	44+135	27+60
DUAL (only AUX)	PROPANE (E)	2800	2800	44	27
P	PROPANE (E)	10500	10500	92	52
CDF	PROPANE (E)	5500	5500	65	/

CAUTION: The gas supply shall be shut off prior to disconnecting the electrical power, before proceeding with the conversion. The kit for the gas conversion of the burners is relevant to the model of the appliance indicated on the label sti-cking to the first page of this booklet. The kit contains the number and type of orifices necessary for the conversion, all the necessary instructions, a label to stick onto the old one to show the new setting and the label to be completed by the technician who performs the conversion. The appliance is pre-adjusted in factory for the gas indicated on the label put on the gas inlet pipe. For the conversion to another gas refer to table.The positions, types of burner and relevant orifices for the models included in this booklet are depicted in table. The only operation to perform after conversion to a gas different from that shown on the rating plate/label is the adjustment of the minimum gas flow. After conversion remember to put the new gas indication label (supplied in the conversion kit) as close as possible to the existing rating plate, then check the regular ignition of the burners.

If the appliance is installed at an altitude exceeding 2,000 ft, a new set of orifices can be requested from the supplier or an authorised service parts distributor.

NOTE: Due to the lower atmospheric pressure at higher altitudes, foods tend to take longer to cook. Therefore, recipe adjustments should be made in some cases. In general, no recipe adjustment is necessary for yeast-risen baked goods, although allowing the dough or batter to rise twice before the final pan rising develops a better flavor. Try making the adjustments below for successful recipes. Take note of the changes that work best and mark your recipesaccordingly. You may also consult a cookbook on highaltitude cooking for specific recommendations.

WARNING: after first installation of the appliance, after gas conversion kit installation or after any service intervention concerning main gas parts of the appliance, make the leak test using water with soap on the gas connections in order to verify the correct installation. Do not use fire for gas leak testing. The test is valid if there is no bubble or foam build-up during a period of one minute.

CONVERSION KIT INSTALLATION INSTRUCTIONS

CODE	NATURAL GAS	PROPANE GAS
UP30(W/N/Q)(MP/S3) UN30(W/Q/N/QN)(MP/S3) UT30(W)(S3)	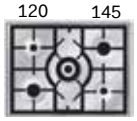	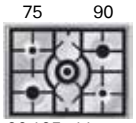
UP36(6/F)(W/N/Q)(MP/S3) UN36(6/F)(W/Q/N/QN)(MP/S3) UT36(6/F)(W)(S3) UP361(6/F)(W/N/Q)(MP/S3) UN361(6/F)(W/Q/N/QN)(MP/S3) UT361(6/F)(W)(S3) UPD36(6/F)(W/N/Q)(MP/S3) UND36(6/F)(W/Q/N/QN)(MP/S3) UTD36(6/F)(W)(S3) UPD40(6/F)(W/N/Q)(MP/S3) UND40(6/F)(W/Q/N/QN)(MP/S3) UTD40(6/F)(W)(S3)	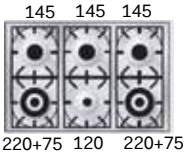	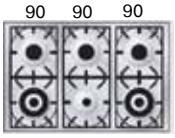
UPD40(S)(W/N/Q)(MP/S3) UND40(S)(W/Q/N/QN)(MP/S3) UTD40(S)(W)(S3)	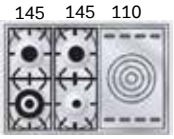	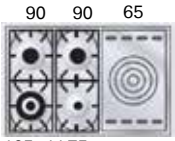
UP48(S)(W/N/Q)(MP/S3) UN48(S)(W/Q/N/QN)(MP/S3) UT48(S)(W)(S3)	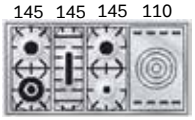	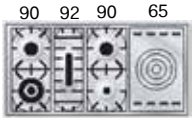
UP48(8/F)(W/N/Q)(MP/S3) UN48(8/F)(W/Q/N/QN)(MP/S3) UT48(8/F)(W)(S3)	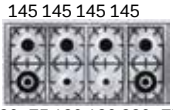	
UP60(S/FS)(W/N/Q)(MP/S3) UN60(S/FS)(W/Q/N/QN)(MP/S3) UT60(S/FS)(W)(S3)	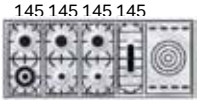	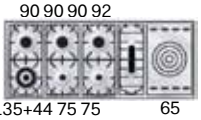
UP60(9/F)(W/N/Q)(MP/S3) UN60(9/F)(W/Q/N/QN)(MP/S3) UT60(9/F)(W)(S3)	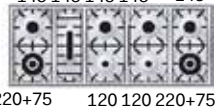	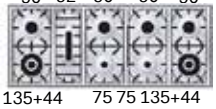

⚠ WARNING

Save the orifices removed from the appliance for future use

⚠ WARNING

To go back to the original set replace old orifices as shown

⚠ WARNING

This conversion kit shall be installed by a qualified service agency in accordance with the manufacturer's instructions and all applicable codes and requirements of the authority having jurisdiction. If the information in these instructions is not followed exactly, a fire, explosion or production of carbon monoxide may result causing property damage, personal injury or loss of life. The qualified service agency is responsible for the proper installation of this kit. The installation is not proper and complete until the operation of the converted appliance is checked as specified in the manufacturer's instructions supplied with the kit.

BURNERS OF THE TOP

Replacement of the injectors

Procedure: SR - R - P - small solid top burner

1. Remove the grill and the burners from the hob.
2. Bruciatori SR – R – P :

SR – R – P burners: unscrew injectors “U” using a 7-mm spanner and replace them with those for the newgas according to table on page 15.

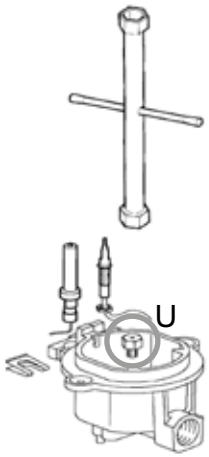

Procedure: DCC

1. Remove the grill and the burners from the hob.
2. DCC - Dual burners: unscrew the 2 screws and remove cover

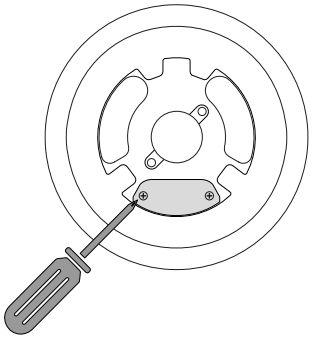

3. Unscrew the injectors with a 7 mm wrench and replace them with those for the new gas according to the table on page 15. Keep the removed injectors from the unit for future use.

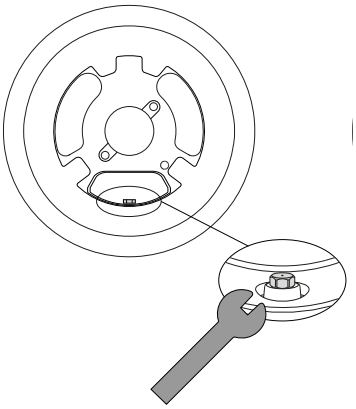

Procedure: DCC

1. Remove the grill and the burners from the hob.
2. Unscrew the 2 screws and remove cover

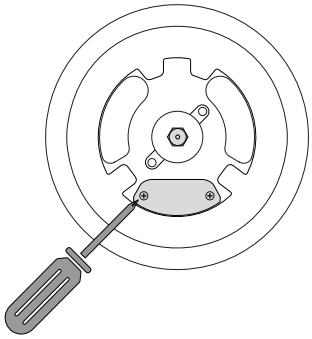

3. Unscrew the injectors with a 7 mm wrench and replace them with those for the new gas according to the table on page 15. Keep the removed injectors from the unit for future use.

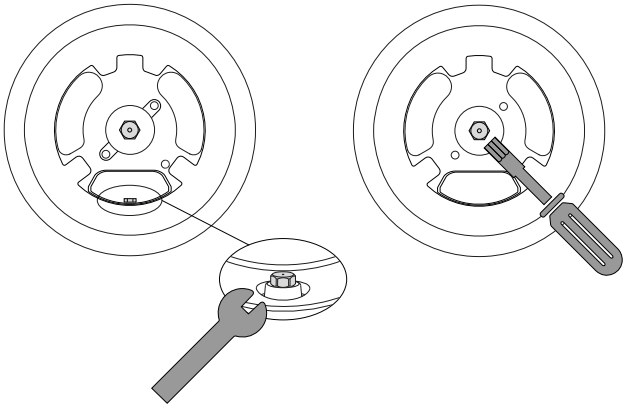

BURNERS OF THE TOP

Adjustments minimun GAS flow

Adjustments

When installing the cooker, you must check that the minimum gas flow of the burners on the hob and in the oven is correctly regulated. If the type of gas is changed it is indispensable to adjust the minimum flow. The regulating procedure is as follows.

Procedure
1. Light one burner at a time and turn the flame up tomaximum.
2. Remove the knob of the corresponding gas tap andinsert a screwdriver in the end part of the tap or in thescrew.
3. Turn the tap to minimum position.
4. Unscrew, turning to the left, to increase the flame, orscrew to the right to decrease it.
5. ATTENTION If a liquid gas is used (Butane - Propane), theregulating screw must be fully screwed in.

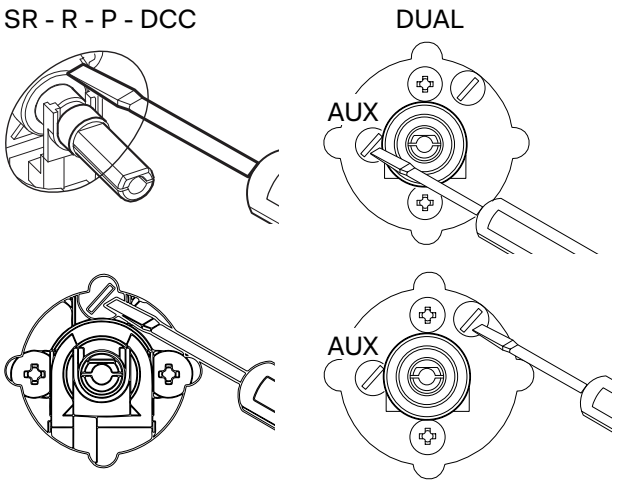

SERVICE & MAINTENANCE INSTRUCTIONS

Replacement Parts.

Authorized replacement parts may be used in performing service on the appliance. Replacement parts are available from factory authorized part distributors.

Service and maintenance only to be carried out by an authorised person.

To replace parts such burners, valves and electric components, the hotplate must be removed from the bench top by releasing the attachment hooks, loosening the attachment screws of each burner, unscrewing the hotplate attachments nuts which are visible at the bottom of the surface, removing the hotplate top and finally replacing the defective parts.

Note 1: if the valves must be replaced, first disassemble the ignitions switches wires.

It is recommended to replace the valve gaskets each time the valve is replaced.

Note 2: if the main gas pipe needs replacement, make sure it has the correct welded metal supports for assembly.

WARNING: after first installation of the appliance, after gas conversion kit installation or after any service intervention concerning main gas parts of the appliance , make the leak test using water with soap on the gas connections in order to verify the correct installation. Do not use fire for gas leak testing. The test is valid if there is no bubble or foam build-up during a period of one minute.

NON WORKING APPLIANCES

Before calling the After Sales Service, check that the appliance is connected or that the main switch is activated.

After, call the After Sales Service. The faults must be checked by an experienced technician.

Remark: the appliance is equipped with a safety thermostat, adjusted at a certain temperature. In case it reaches a higher temperature, the appliance switches off

CLEANING AND MAINTENANCE

Removing the door

To facilitate intensive cleaning of the oven, it is practical to remove the door by following these instructions:

1. Open the door:

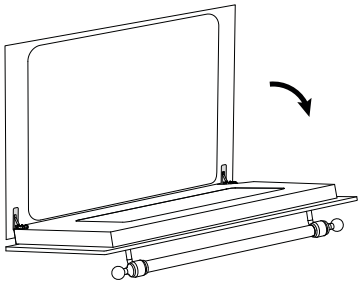

2. Move the latch C to the hinge section D following the steps:

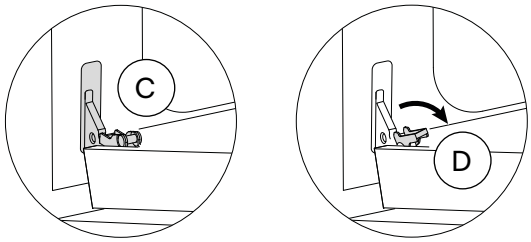

- Only on UM30:

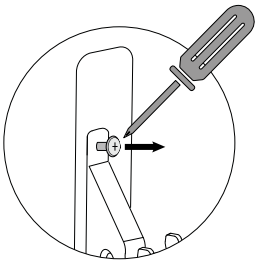

3. Remove the door:

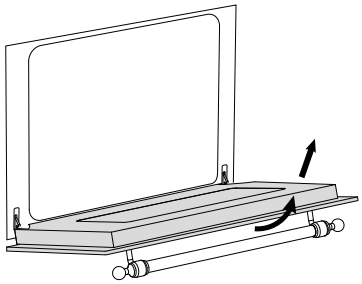

Disassembly and cleaning of the glass

The oven door is made up of three glass panels. The cleaning of the glass parts is done using non-abrasive kitchen paper and a common detergent. Do not use rough abrasive materials or sharp metal scrapers to clean the oven glass doors as they may scratch the surface and cause the glass to break. The inner glass panels are removable (the middle glass should be correctly repositioned with the THERMOSTOP writing readable, as shown in figure 3) to make cleaning easier. To do this, it is necessary to disassemble the oven door.

⚠

ATTENTION: Any operation should always be carried out with the door removed from the oven and placed on a suitable surface to avoid damaging the front of the door. The middle glass must be correctly inserted with the THERMOSTOP label readable, as shown in the following images:

1. Unscrew the 2 screws on the right/left side of the top strip

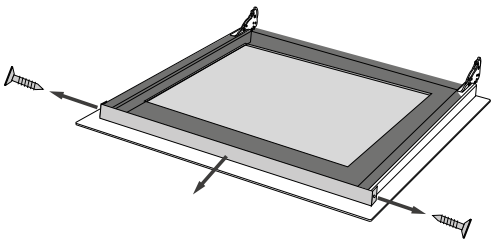

2. Lift the top glass and slide it out

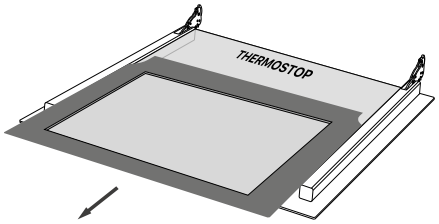

3. Slide out the middle glass

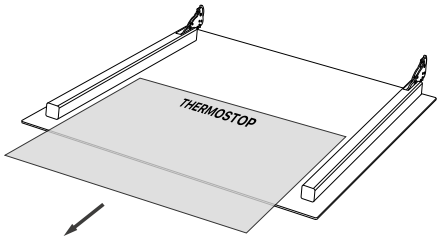

CLEANING AND MAINTENANCE

Procedure

If the oven light is not working, disconnect the appliance from the power supply, remove the protective glass of the lamp, and replace the bulb. It is important to ensure that the replacement bulb is suitable for high-temperature use and has the necessary specifications for such an application.

1. Loosen with a flathead screwdriver:

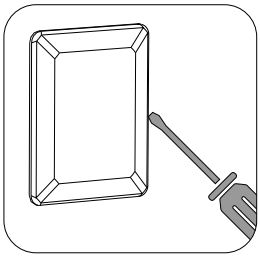

2. Remove the lamp cover glass:

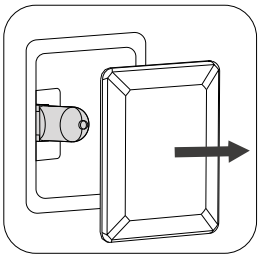

3. Remove the lamp:

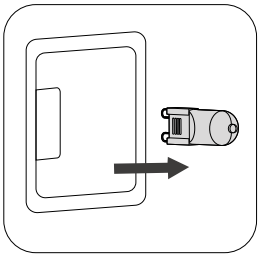

4. Replace and close it:

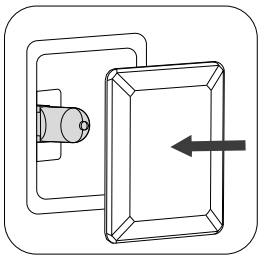

Cleaning the oven

ATTENTION! Before carrying out any cleaning operations, disconnect the appliance from the mains and close the gas valve. The cooktop must be cleaned after it has been let cooling down.

COMPONENT	CLEANING METHOD	WARNINGS
Oven inside	It is recommended to clean the oven after every use. Dirt is cleaned more easily avoiding to let it burn several times at high temperatures. Remove every removable part and clean it separately with hot water and non-abrasive detergent. The cavity is cleaned with a soft cloth soaked with a solution made of water and ammonia. Rinse and dry.	Do not use vapor cleaner to clean the interior of the oven. Do not use abrasive/corrosive detergents or sharp tools to clean the glass of the door as they could damage and break the surface.
Tray	Immerse in a solution made of water and neutral soap. Dry afterwards.	Remove residual food immediately after use.
Grills	N-acidic detergent.	Acidic substances such as lemon juice or other acidic detergents may permanently damage the enamel of the grills. Carefully dry the grills with a cloth right after the cleansing. It is not recommended to wash them in the washing machine.

Cleaning the burners

ATTENTION! Some cleaning and washing methods are recommended in order to preserve the quality of the coating.

- Allow the product to cool down at room temperature before cleaning it. It is recommended not to dip it in cold water when it is still hot.
- Wash with warm water and a minimum of neutral detergent. Rub with a cloth, better if in natural cellulose, or non-abrasive sponge.
- Do not use dust, iron wool, cloths and abrasive sponges.
- Do not let food be charred on the burner. In case stains/colorations may appear on the surface. These traces do not alter the functionality of the product, and in some cases can be eliminated with this procedure: immerse the product in hot water, with detergent, wipe gently with a cloth, better if in natural cellulose; in any case, do not use abrasive cloths or sponges. For the most resistant stains, it is advisable to warm white vinegar and rub as indicated above.
- Avoid leaving the burners in contact with food for a long time, especially if acidic, such as tomato sauce.
- Avoid contact with metal objects; if really needed, use wooden or plastic objects.
- Avoid washing in the dishwasher, a part of the product is not coated and would get irreparably damaged.
- In case of malfunction, make sure that the holes in the outer crown are perfectly clean.
- For proper operation of the DUAL burner, keep the inter-ignition channel highlighted in the image below clean.

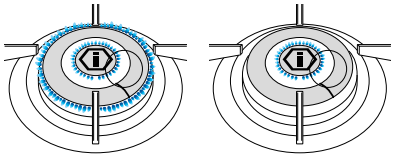

INSTRUCTIONS FOR USE
Accessories

Use of the rotisserie spit (available only in some models)

Slide the meat onto the spit rod, securing it with the appropriate forks. Place the rod onto the rotisserie supports previously inserted into the drip tray, and insert it into the rotisserie motor shaft. Turn on the static grill function with the door closed. To remove the spit along with the drip tray, pull it out just enough to allow for complete extraction.

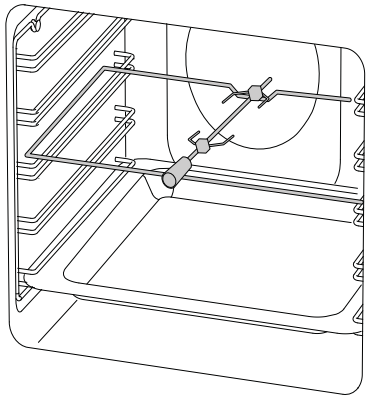

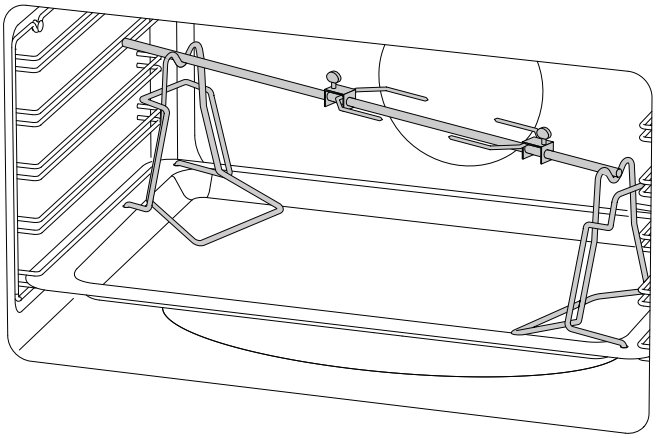

Telescopic guides (available only in some models)

This solution is designed to enhance ergonomics, practicality, and safety when handling trays and pans in the oven. The kit consists of fully extendable side rails that slide on ball bearings to facilitate the removal and placement of trays. The rails are anti-tip for added safety. They can be removed for cleaning or repositioned, as shown in the photos below.

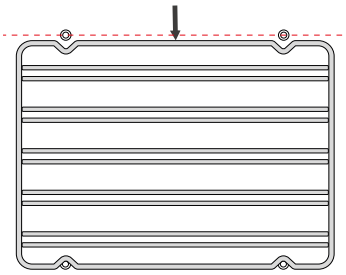

Pull down the part highlighted in red to remove it from the oven wall..

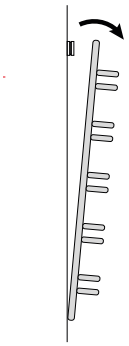

Turn them over and place them on a flat surface with the sliding guide side facing down..

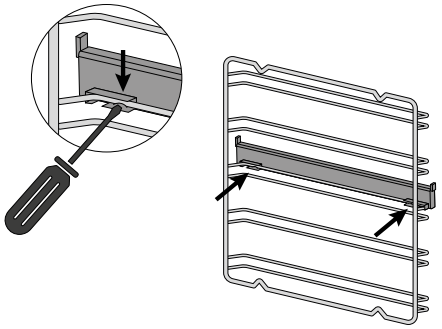

To release the clip, loosen it with a flathead screwdriver..

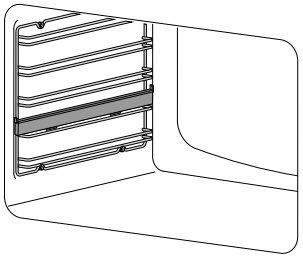

Repeat the steps in reverse to reposition the guide..

INSTRUCTIONS FOR USE

Burners

IMPORTANT: keep children away from the appliance when it operates. The oven door becomes very hot. Safety rules do not always cover any type of accident. The appliance must not be used for heating purposes. If other electric appliances are connected to outlets placed near the appliance, make sure that the connection cables will not be trapped in the oven door while operating.

GENERAL NOTES: for safety reasons and to ensure proper functioning of the appliance, any required maintenance

must be undertaken by skilled technicians or after sales service in warranty period. Clean the oven regularly after the use. The dirt can be easily removed, in this way it will not burn at high temperatures. Choose heat-resisting pans

according to the quantity of food you want to cook. Stainless steel containers are not recommended as they refl ect heat. Shelf height should be adjusted as necessary according to the food to be cooked and the recipe.

FIRST SYSTEM STARTUP: all removable parts of the oven, should be washed with detergent and then reassembled.

Start the oven for about 60 minutes and set the thermostat to 440°F. During this initial heating period some unpleasant

smell will be experienced, which is unavoidable and quite normal. When the oven has completely cooled down, clean it referring to the paragraph «Cleaning and care».

IMPORTANT: be sure that you have correctly identified the model that you possess (see the data plate).The various

operations are described below, one after the other. Not all concern the cooker you have bought, select the ones

that do.

Position the flame divider "B" correctly. To do this, align the 4 teeth "C" of the flame divider with the recess "D" of the aluminium Cup "A".

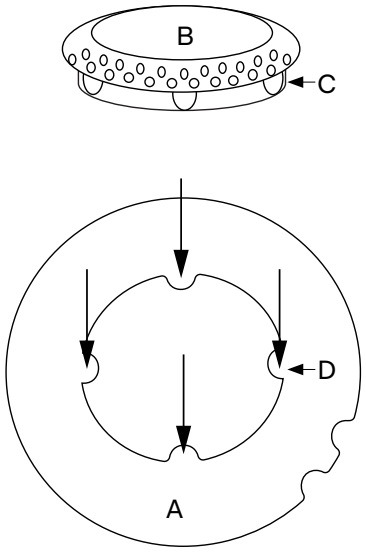

IMPORTANT: when you are using the oven for the fi rst time, let it work empty for one hour, leaving possibly the windows of the kitchen open. The oven will emanate bad smells due to production residuals such as greases, oils or resins. After that the oven is ready for the first cooking.

Lighting the burners

The index above the knobs will help you to find the corresponding burner. Press the knob by turning it anti- clockwise and bring it to the ignition position; keep the knob pressed for about 5 seconds so that upon its release the flame remains alight. In case of unsuccessful ignition wait 5 minutes before relighting and repeat the operation. By turning the knob, the outer ring lights up red to indicate the GAS burner in operation

Symbol	Function	Knob
	index	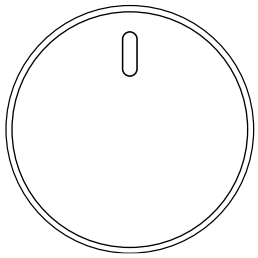
	off	
	max	
	min	

DUAL

Symbol	Function	Knob
	off	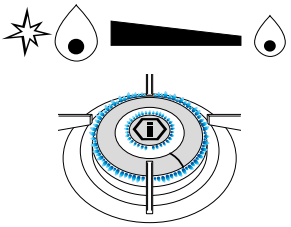
	max	
	min	

AUX

Symbol	Function	Knob
	off	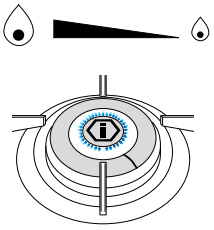
	max	
	min	

IGNITION OF THE "DUAL" BURNER

Identify the knob with the help of the index near the knobs. Press and turn the knob to the symbol (maximum) for 5 seconds. Once the burner is on, by turning the knob coun-terclockwise it gets to its first block that corresponds to the middle one By applying a bit of force, the first block is exceeded and the outer ring goes out leaving only the little central burner turned on called AUXILIARY. To adjust the auxiliary burner on minimum, rotate the knob counterclockwise until it stops. At this point, to turn the burner back on, rotate the knob clockwise up to the desired value.

INSTRUCTIONS FOR USE

Burners

Recommended pans according to burner size:

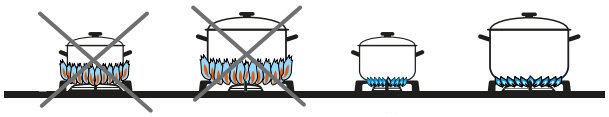

Burners	ID	Diameter Ø
Meduim	SR	4 3/4 ÷ 7 3/4
Large	R	4 3/4 ÷ 9 2</4
Fish burner	P	oval pans 380 x 185
Dual - Ring	DUAL	4 3/4 ÷11 3/4

Positioning of the burners

⚠ Always check that the burners are properly positioned), with a uniform flame that is not noisy.

Burners	Right	Wrong
Medium Large		
Dual Ring	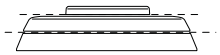	
Fish burner Always check that the screws below the burner are fixed	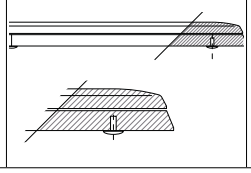	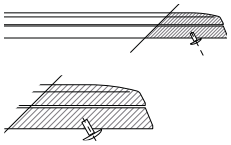

⚠ WARNING

Burners should be operated only when covered by cookware. Burner flames not covered by cookware present a risk of fire or clothing ignition. Never let flames extend beyond the sides of the cookware. Failure to comply may result in serious injury. Make sure all burners are in their correct locations and fullly assembled before attempting to operate any burner

Use of the coup feu

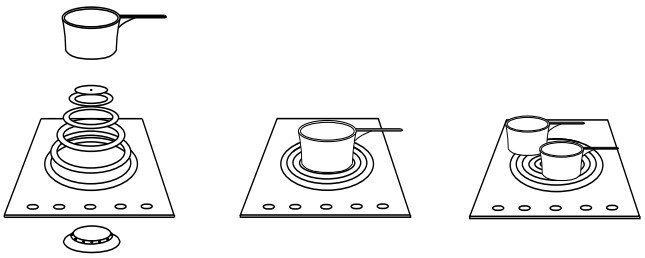

The "Coup feu" solid cast iron plate made of concentric rings allows you to rest the pan (or even several pans) directly on the surface.
It is heated by means of a gas burner.
The plate is designed to provide a moderately intense heat which is well distributed over the surface.

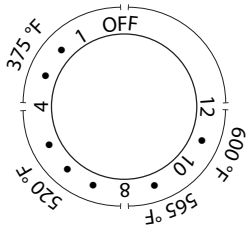

SETTING	°F
1 ÷ 4	375 °F
4 ÷ 8	520 °F
8 ÷ 10	565°F
10 ÷ 12	600 °F

To use the appliance, light the flame below the plate by means of the corresponding knob and ensure that there is a flame.

This is ideal for slow cooking and particularly for sauces, browning and grilling, heating dishes or keeping them warm.

Switch the burner on 15/20 minutes before use to allow the cast iron plate to accumulate heat.You will then be able to use the plate even when switched off for a further 10/15 minutes. The middle of the plate is the area where the highest temperatures are reached whereas the outer part is cooler.

By simply moving the pan from the middle to the outside of the plate, you can obtain different cooking intensities without regulating the flame. Pan dimensions permitting, several dishes can be cooked at the same time . If necessary it can be used as a handy top, providing ample space for resting pots and pans.
When the center surface of the plate reaches the temperature set with the control knob, the burner flame begins to cycle on and off to maintain a stable temperature.

Cleaning the Coup feu plate

The hotplate should be cleaned while still warm using the products normally used in the kitchen for metal surfaces. Rub with a wire pad, following the direction of the satin finish. Dry well immediately. If you want to give the plate a better appearance, after cleaning, apply a coat of a specialist cleaning paste / cream.

If you do not intend to use the hotplate for long periods, after normal cleaning apply a thin film of liquid paraffin (Vaseline oil) with a wad of cotton wool This treatment is

necessary to prevent any formation of surface oxides.

When next turning on the plate you will notice the evaporation of the paraffin oil used. This phenomenon will disappear in a few seconds.

The hotplate may sometimes present phenomena of surface oxidation due to the presence of humidity, but above all due to lack of use. You are therefore advised to use it frequently to prevent any oxidation. Never leave the hotplate damp. If the oxidation phenomenon still appears, use lightly abrasive paper to remove the oxidation, taking care to rub gently, always in the direction of the plate satin finish.

Do not cook food directly on the plate surface. Always use suitable containers.

INSTRUCTIONS FOR USE

Use of the electronic programmer

Display

Symbols relative to the functions in progress:

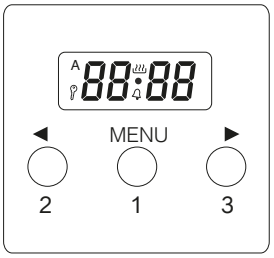

	Timer
	Duration and manual function
A	Automatic cooking icon
●	Dot icon
MENU	(1) Functio selection button
[–][+] 2 - 3	Press button “3” to increase and button “2” decrease

SETTING THE TIME (12-HOUR CLOCK AM/PM)

After connecting the appliance or after a power outage, “0.00” and “A” will flash on the display.

- Press button 1 for 2 seconds: the dot icon starts flashing. Set the current time using buttons 2 and 3. Seven seconds after finishing the adjustment, the new data will be saved.
- Time correction can be carried out later:

  Press buttons 2 and 3 for 2 seconds: the dot icon starts flashing. You can now set the current time.

CHANGE OF TONE (using buttons 2 and 3):

The tone of the acoustic signals can be changed as follows:

- Press buttons 2 and 3 simultaneously.
- Press button 1 to display the current tone (“ton.1”).
- Press button 2 to select the desired tone from 1 to 3 (ton1 – ton2 – ton3).

WARNING! If the time is not set correctly, the oven may not operate.

MANUAL OPERATION

If the programmer is not in semi-automatic or fully automatic mode, the oven functions can be used in manual mode.

CLEARING THE SETTINGS

To clear the automatic function settings:

- Press buttons 2 and 3 simultaneously.

SETTING THE TIMER

The timer can be activated at any time, regardless of the status of the other programmer functions. The measurable time ranges from 1 minute to 23 hours and 59 minutes.

- Press button 1 until the timer icon starts flashing and the display shows “0.00”.

To clear the timer settings:

- Press button 1 to select the timer.
- Press buttons 2 and 3.

COOKING TIMER

Press the OK button for 2 seconds to enter the programming If you want the oven to switch off at a specific time, you can set the cooking timer (semi-automatic mode).

- Press button 1 until “dur” and “0.00” flash, together with the automatic cooking icon A.
- Set the cooking time using buttons 3 and 2, from 1 minute to 10 hours.

After 7 seconds, the time will be saved and the current time will reappear. The automatic cooking icon (A) remains on the display. Select the oven temperature and function.

At the end of the cooking time, an acoustic signal will sound for about 7 minutes and the automatic cooking icon will start flashing.

Turn the control knobs and the thermostat knob to OFF. Press button 1, 2, or 3 to stop the signal and return to manual operation.

COOKING TIME WITH DELAYED START

If you want the oven to turn on for a specified cooking time and switch off at a set time, you can set both the cooking time and the end-of-cooking time (fully automatic mode).

- Press button 1 until “dur” and “0.00” flash, together with the automatic cooking icon A. (Example: current time 5:30 PM)
- Set the cooking time using buttons 3 and 2 (from 1 minute to 10 hours). (Example: 1 hour)
- Press button 1 until “End” and “6.30 PM” (end time) flash.
- Set the switch-off time using buttons 3 and 2, up to a maximum of 23 hours and 59 minutes. (Example: 7:30 PM)
- Set the thermostat and oven function knobs. The cooking icon disappears from the display. The oven will automatically turn on at the appropriate time (example: 6:30 PM), corresponding to the difference between the end time and the cooking time. When cooking ends (7:30 PM), an acoustic signal will sound for 7 minutes and the automatic cooking icon (A) will start flashing. Turn the knobs to OFF.
- Press button 1, 2, or 3 to stop the signal and return to manual mode.

CHILD LOCK

- All buttons are locked and the oven becomes inactive. This prevents children from accidentally operating the appliance.
- Note: To deactivate the child lock, press and hold the **MENU** buttons for 3 seconds until the key symbol disappears.



- To activate the child lock function, press and hold the **MENU** buttons for 3 seconds.



- The key symbol will appear on the display (child lock active).

INSTRUCTIONS FOR USE

Use of the electric oven multifunction / static

S. Selector	S. Selector	T. Thermostat
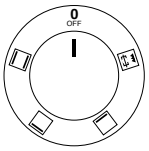	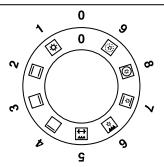	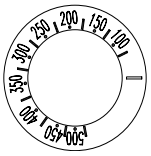

Command of the oven multifunction

S. Multifunction / static electric oven selector

T. Temperatures, from 100°F to 500°F, can be selected by using this knob.

Turning on and off

Choose one of the cooking operations by turning the selector (S) and adjust the

temperature with the thermostat (T).

We recommend putting into the oven after preheating.

Function oven

Choose one of the cooking functions pag.35-36 by turning the selector (S) and adjust the temperature (100°F to 500°F) with the thermostat (T). If your model is equipped with a programmer, prepare it for cooking.OVEN static

Function oven static

2		Normal static cooking It is the oven's classic function particularly suited to cooking the following foods: pork chops, sausages, cod, braised beef, game, roast veal, meringues and biscuits, baked fruit, etc.
3		Cooking from underneath This is the most suitable mode to finish the food cooking, in particular confectionery (biscuits, meringues, leavened cakes, fruit desserts, etc.) and other foods. Max temperature F°430
4		Cooking from above Especially suitable for browning and to give the final touch of colour to many foods; it is recommended for ham-burgers, pork chops, veal steaks, sole, cuttlefish, etc. Max temperature F°355
5		Closed door grill cooking The suitable function for fast and deep grilling, to brown and roast meats in general, fillet steaks, Florentine steaks, grilled fish and also grilled vegetables..

Function oven multifunction

1		Pizza cooking This function is particularly suitable for cooking pizza, focaccia and bread. The main source of heat is from the bottom heating element that works in combination with the oven's other resistances.
2		Normal static cooking It is the oven's classic function particularly suited to cooking the following foods: pork chops, sausages, cod, braised beef, game, roast veal, meringues and biscuits, baked fruit, etc.
3		Cooking from underneath This is the most suitable mode to finish the food cooking, in particular confectionery (biscuits, meringues, leavened cakes, fruit desserts, etc.) and other foods. Max temperature F°430
4		Cooking from above Especially suitable for browning and to give the final touch of colour to many foods; it is recommended for ham-burgers, pork chops, veal steaks, sole, cuttlefish, etc. Max temperature F°355
5		Closed door grill cooking The suitable function for fast and deep grilling, to brown and roast meats in general, fillet steaks, Florentine steaks, grilled fish and also grilled vegetables.
6		Fan grill cooking Particularly fast and deep with significant energy savings, this function is suitable for many foods such as pork chops, sausages, pork or mixed spits, game, gnocchi alla romana, etc.
7		Intensive cooking Is the quick and intense cooking function for various dishes; best for: baked fish, braised vegetables, spits, duck, chicken, etc.
8		Multiple fan cooking It is the function that allows simultaneous cooking of different dishes without the smells blending; you can cook lasagne, pizza, croissants and brioches, tarts, cakes, etc.
9		Quick Start This function speeds up your oven's pre-heating. We suggest you use this function when you set a cooking temperature from between 400 and 575 ° F. Use of the QuickStart function for temperatures under 400 ° F is not advantageous. Once the oven has reached the temperature, select the desired cooking function and the temperature. WARNING: the Quick Start function is not suitable for cooking foods, it is only for quickly pre-heating the oven. DO NOT USE THE QUICK START FUNCTION FOR MORE THAN TWENTY MINUTES.

INSTRUCTIONS FOR USE
Induction appliance

Before the first use

Clean your hob with a damp cloth, and then dry the surface thoroughly. Do not use detergent which risks causing bluetinted colour on the glass surface.

INDUCTION PRINCIPLE

An induction coil is located under each heating zone. When it is engaged, it produces a variable electromagnetic field which produces inductive currents in the ferromagnetic bottom plate of the pan. The result is a heating-up of the pan located on the heating zone.

Of course the pan has to be suitable:

- All ferromagnetics pans are recommended (please verify it thanks a little magnet): cast iron and steel pans, enamelled pans, stainless-steel pans with ferromagnetic bottoms...
- Are excluded : copper, pure stainless-steel, aluminium, glass, wood, ceramic, stoneware,...

The induction heating zone adapts automatically the size of the pan. With a too small diameter the pans doesn't work. This diameter is varying in function of the heating zone diameter.If the pan is not suitable to the induction hob the display will show [U].

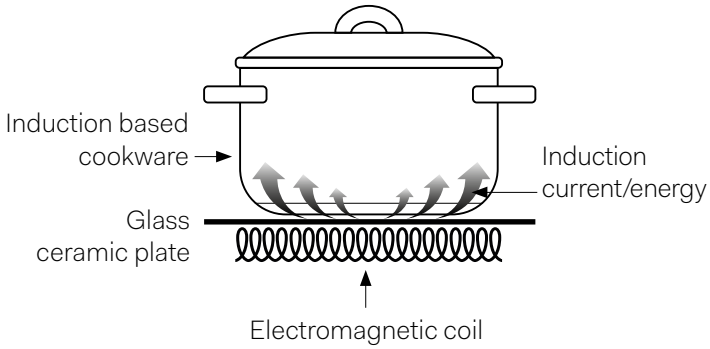

IMPORTANT

The ceramic hob remains hot for a long time after use. Do not touch the hob with your hands or let children near it. The residual heat indicator will remain lit until the hob has cooled down.

If any cracks appear in the ceramic hob, disconnect the appliance immediately from the mains and call an authorized technical service centre.

The hob has cooking areas with different power values and diameters.

The positions are clearly indicated by the rings during operation, heat is located exclusively within these rings and the remaining area stays cold.

Each cooking area is designed to operate with specific pans for induction cooking, having a diameter just smaller than the diameter of the chosen cooking area. The bottom of the pan must be thick and flat. Its diameter must be as similar as possible to that of the cooking ring. The surface of the hob and the bottom of the pan must be kept clean.

Do not wet or overheat the plates.

- Avoid sudden changes of temperature on the ceramic hob. For example, do not pour cold water onto the hot hob.
- Do not leave the pan handles sticking out as they could be flipped accidentally.
- It is preferable not to cook on the ceramic hob with pans that have been used on gas burners The flames will have deformed the bottom of the pans.

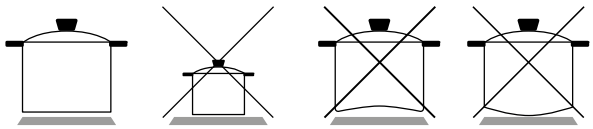

WARNING

The glass ceramic cooking zone is warmed up from the heat of the pan. To avoid injuries (burning) do not touch this area.

Burners	Cooking area (inch)	Electric power (watt)
A	ø 5"3/4	1400W / Booster 1800W
B	ø 7"1/4	1850W / Booster 2500W
C	ø 8"11/16	2300W / Booster 3200W

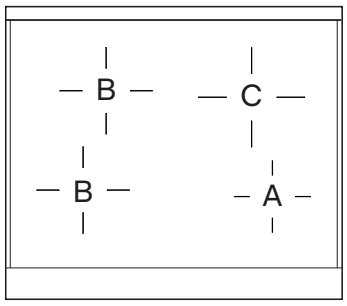

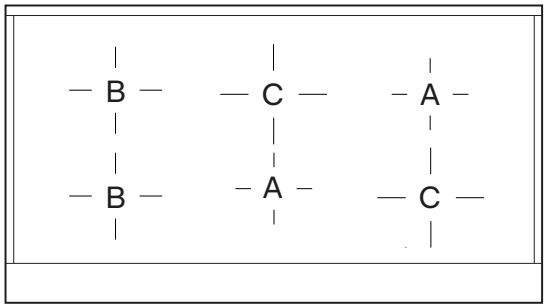

INSTRUCTIONS FOR USE
Induction appliance

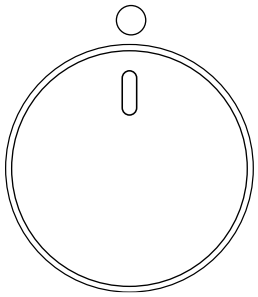

SWITCHING ON A COOKING AREA

A cooking area is switched on by pushing and turning the relevant knob clockwise. The set power level appears on the hob display (from 1 to 9).

SWITCHING OFF A COOKING AREA

A cooking area is switched off by turning the relevant knob anticlockwise. The symbol [0] appears on the hob display for 3 seconds, then it disappears from the display changes to the symbol [H], if the cooking area is still hot.

AUTOMATIC SWITCHING OFF OF THE DEVICE

The device switches off automatically if any conditions of excess temperature (185°F) or errors in power supply occur.

BRIDGE function for the induction hob:

Place the pan in the middle of the two heating zones that will be connected (the two equal-sized zones).

Turn the knobs of the two affected zones clockwise and until the end of the stroke.

Hold them for 3 seconds to activate the function.

Adjust the power of the bridge with the front left area knob.

BOOSTER FUNCTION

The purpose of the booster function is to give more power to a determined area in order to reduce the necessary cooking time.

This function is activated by pushing and turning the knob clockwise from position 0 (off) to the fi nal position (* fig. 13). The symbol [P] appears on the display, meaning that the booster function is activated.

The Booster function has a maximum duration of 10 minutes. The area concerned then returns to level [9].

The Booster function ends before this time when:

- a lower power level is set
- the pan is removed
- there is overheating of the appliance or of the heating area

The Booster function has precedence over the "Heat-up" function. This means that, if the heat-up function has been activated in an area at the time of activating the Booster function, the heat-up function will be interrupted.

RECOGNIZING THE PRESENCE OF A PAN

Each cooking area is designed to operate with specific pans for induction cooking, having a diameter just smaller than the diameter of the chosen cooking area. If the pan is not suitable, the display for the area shows the symbol indicating absence of the pan (U) and the appliance does not start up. This prevents the appliance being switched on until a container is placed on the coo king area, or until a container suitable for induction is used. If the container used on the cooking area is removed during this time, the area is switched off.

RESIDUAL HEAT INDICATION

If the cooking area is still very hot, even though it is switched off, the symbol H appears on the display.

"HEAT-UP" FUNCTION

The Heat-up function, or quick heating, is available on each cooking area. This means that for a well defined time the cooking area works at maximum power and at the end of this time the power is automatically brought to the set level. In this case the duration depends on the set power level. The Heat-up function is activated by pushing and turning the knob anticlockwise from position 0 to the final position. As soon as the control is turned to the left, a letter [A] is shown on the display for the area. After it has been activated you must set a power level to continue cooking within 3 to 5 seconds; if this is not done, the Heat-up function is interrupted.

KEY-LOCK FUNCTION

The Key-lock function is useful if there are children at home. However, it is always advisable for an adult to be present

when the appliance is in operation. When the Key-lock function is activated all the cooking areas are switched off and they cannot be switched on accidentally.

The Key-lock function is activated, with the knobs in position 0, by turning the controls 1 and 2 simultaneously in an

counterclockwise direction.

⚠ CAUTION

DO NOT TOUCH SURFACE UNITS OR AREAS NEAR UNITS – Surface units may be hot even though they are dark in color. Areas near surface units may become hot enough to cause burns. During and after use, do not touch, or let clothing or other flammable materials contact surface units or areas near units until they have had sufficient time to cool. Among these areas is the glass surface of the cooktop.

INSTRUCTIONS FOR USE
Induction appliance

Heating function 108°F AND 149°F

Turn the knob (A) clockwise. Between the off position (0) and the power position (1) there is the position (u) which identifies the function for heating food at 108°F. Only for 4 and 6-zone models: turn the knob (A) clockwise again.

Between the (u) position and the power position (1) there is the position (U) which identifies the function for heating food at 149°F. The maximum time of use for both functions is limited to 120 minutes. Both functions are prioritized over the 'HEAT-UP' mode.

The Key-lock function is activated, with the knobs in position 0, by turning the controls 2 and 3 in a counterclockwise direction. The letters [L][L][L][L] appear on the display. The Key-lock function is deactivated by repeating the same operation. The letters [O][F] appear on the display. If a knob is turned when the key-lock function is active, the letters [L][L][L][L] appear on the disp.

DISPLAY A display is associated with each cooking area
Set power level: (1-9)
Food heating 108°F 149°F (U)
Booster: (P)
Heat-up: (A)
Residual heat: (H)
Pan absent or not suitable: (U)
External error: (E)
Fault: (F)
Key-lock function: [L][L][L][L]
Knob permanent rotation: ⌐

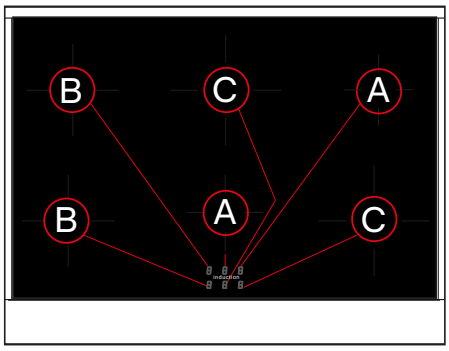

Limit of the duration of operation

A maximum time of continuous operation is associated with each cooking area.

This depends on the set power level. If the limit of the duration of operation is reached, the respective area is switched off

Operating tablE (purely indicative values)

Knob position	Type of cooking
1-2	melting butter, chocolate, etc.
2-4	heating small amounts of liquids, keeping food warm, preparing sauces.
4-5	heating solid foods, thawing frozen foods, omelettes with 2-3 eggs, fruit and vegetables.
5-6	cooking meat and fish, pulses in sauces, dishes with water, making jam.
6-7	roasting meat or fish, steaks, liver, eggs.
8-9	boiling large amounts of water, frying chips, etc.

Time limit operation table

Power Level	Approximate limit of the duration of operation (hours)
U	2
1	6
2	6
3	5
4	5
5	4
6	1,5
7	1.5
8	1,5
9	1,5
P	(10 min. [P], later 80 min. [9])

CLEANING AND MAINTENANCE

Recommendations for cleaning

OVEN		
COMPONENT	CLEANING METHOD	WARNINGS
Oven interior	It is recommended to clean the oven after each use. Dirt is easier to clean if it is prevented from burning at high temperatures repeatedly. Remove all removable parts and wash them separately with warm water and non abrasive detergent. Clean the cooking cavity with a soft cloth soaked in a solution of warm water and ammonia, then rinse and dry.	Do not use steam cleaners for cleaning the oven interior. Do not use abrasive/corrosive detergents or sharp metal tools to clean the oven's glass door, as they may damage the surface and cause it to break.
Tray	Soak in a solution of warm water and mild soap. Dry after washing.	Remove food residues immediately after use.
Racks	Clean with hot water and non-abrasive detergents or with a suitable degreaser.	In case of baked-on and hardened dirt, it is recommended to soak the racks for a few hours before cleaning.

FRONT PANEL		
COMPONENT	CLEANING METHOD	WARNINGS
Stainless steel/glass surface	Clean the details with lukewarm water and non corrosive liquid detergent, then dry them with a soft cloth or microfiber cloth.	Shine is maintained through periodic cleaning with specific products typically available on the market. Never use abrasive powders.
Painted surfaces	To maintain the characteristics of the painted parts, it is necessary to clean them frequently with soapy water.	Avoid leaving acidic or alkaline substances (vinegar, lemon juice, salt, tomato juice, etc.) on the painted parts, and do not wash the painted surfaces while they are still hot.

COOKTOP		
COMPONENT	CLEANING METHOD	WARNINGS
Steel surfaces	Clean the details with warm water and non-abrasive detergent. Dry with a soft microfiber cloth.	Brilliance is maintained through regular cleaning with specific products which can be found in commerce. Never use abrasive powders.
Enameled surfaces	To maintain the characteristics of the enameled surfaces it is necessary to regularly clean them with soapy water.	Avoid leaving acidic or alkaline substances (vinegar, lemon juice, salt, tomato juice, etc.) on enameled parts and washing them when are still hot.
Cooktop grills	Remove the grills and wash them with warm water and non-abrasive detergent. Carefully remove every encrustation. Dry before placing them back on the cooktop.	Acidic substances such as lemon juice or other acidic detergents may permanently damage the enamel of the grills. Carefully dry the grills with a cloth right after the cleansing. It is not recommended to wash them in the washing machine.
Spark plugs and thermocouples	Clean with a humid cloth. If necessary, remove dry dirt with a toothpick or a needle.	Spark plugs and thermocouples must be cleaned and checked regularly.
Crowns, gas rings, and caps	Gas rings and caps are removable to allow easy cleaning. Wash them with hot water and non-abrasive detergent.	Carefully remove every encrustation and wait that they are completely dried off. In the case of malfunctioning, make sure that the holes in the external crown are always perfectly cleaned.
Induction or fiberglass	Remove light stains with a humid cloth and dry with a soft cloth.	Don't clean with abrasive products. Don't use any object that could ruin the fiberglass top. Make sure that the bottom of the pan is dry and clean, and that glass surface has no dust. Moving the pan may scratch the glass. Immediately remove residual sugar, jam and jelly to prevent damaging the glass.

DRAWER	
Cleaning is the only maintenance that is required. Warning! Cleaning must be performed with the cooker disconnected from the power supply. **Do not use aggressive or abrasive cleaning products, abrasive sponges or sharp objects that can leave marks of abrasion. Do not use steam cleaners for internal cleaning of the drawer.**	
COMPONENT	CLEANING METHOD
Front panel	To clean the front panel, use specific cleaning products such as warm water and non-abrasive detergents. Apply a small amount of product on a soft cloth and rub on the surface..
Painted surfaces	Clean the inside of the drawer with a damp cloth. If it is very dirty, add a few drops of detergent (non-aggressive universal degreaser) to the wash water. Clean the surface with a dry cloth to dry. Reuse the drawer only when it is completely dry.

CLEANING AND MAINTENANCE

Recommendations for cleaning

List with common types of soiling and recommendations how to treat them:

Type of soiling	Treatment
Slight soiling, no burned residues	Wipe with a moist cloth (scotch), without cleaning agent
Sticky soiling	Remove with a scraper. Then wipe the heating area with a moist cloth
Lime deposits, caused by water which has boiled over (induction hob)	Immediately scrape off the sugar, plastic or aluminum foil residues thoroughly from the hot cooking area, e.g. with a razor blade. After removal of the residues, clean it with a cleaning agent. If the heating area is soiled with residues of sugar, plastic or aluminum foil cools down without prior cleaning, the ceramic surface might become deformed by pinheadsized pits.

List with common types of soiling and recommendations how to treat them:

The cleaning of the Ceran glass is identical to other similar surfaces like glass. Do not use corrosive or abrasive cleaning agents, such as grill and oven-sprays, stain- and rust-removers, scouring powder and rough sponges.

Before being cleaned, the Ceran glass must be cooled down.

Other maintenance and servicing work other than cleaning as described here, must be done by authorized service

personnel.

Make sure that no liquid can enter in the induction unit.

A good maintenance of the induction cooker requires a regular cleaning, care and servicing.

The operator has to ensure that all components relevant for safety are in perfect working order at all times.

The cooker should be examined at least once a year by an authorized technician.

CAUTION Do not open the induction unit, dangerous electric voltage inside

The cookers may only be opened by authorized personnel.

COOKING CHART

Convection oven (indicative values)

DISH	TEMP (°F)		TIME (MIN)
MEATS			
Roast beef	680 / 360	2/3	40/50
Roast ox	340 / 370	2/3	40/60
Roast veal	320 / 360	2/3	65/90
Roast lamb	280 / 320	2	100/130
Rare roast beef	360 / 370	2/3	40/45
Roast hare	340 / 360	2/3	80/100
Roast rabbit	320 / 340	2	80/100
Roast turkey	320 / 340	2	160/240
Roast goose	320 / 360	2/3	120/160
Roast duck	340 / 360	2/3	100/160
Roast chicken	360	2/3	90/120
FISH	320 / 360	2/3	15/25
PATISSERIE			
Fruit cake	360 / 390	2	40/50
Margherita cake	360 / 370	2	40/45
Brioches	340 / 360	2	40/60
Sponge cake	370 / 390	2	25/35
Donuts	320 / 360	2	35/45
Sweet puff pastry	360 / 390	2	20/30
Grape flatbread	370 / 390	2	30/40
Strudel	320	2	25/35
Savoiardi biscuits	300 / 360	2	50/60
Apple fritters	360 / 390	2	18/25
Savoiardi pudding	340 / 360	2	30/40
BAKERY			
Bread	360 / 390	3	45
Pizza	480	3	10/20
Toast	370 / 380	2	7

IMPORTANT: Introduce the food when the oven is preheated.

Grill cooking

For appliances with an electric grill, cooking is done with the door closed at 360°F. The food to be grilled should be placed on the corresponding grill, preferably on the fourth rack.

Static oven (indicative values)

DISH	TEMP (°F)		TIME (MIN)
MEATS			
Roast beef	440	2/3	60/80
Roast ox	480	2/3	50/60
Roast veal	440	2/3	60/80
Roast lamb	440	2	40/50
Rare roast beef	450	2/3	50/60
Roast hare	490	2/3	40/50
Roast rabbit	490	2	40/50
Roast turkey	490	2	50/60
Roast goose	440	2/3	60/70
Roast duck	490	2/3	45/60
Roast chicken	490	2/3	40/45
FISH	390/440	1/2	15/25
PATISSERIE			
Fruit cake	440	2	35/40
Margherita cake	350/390	2	50/60
Brioches	350/390	2	25/30
Sponge cake	430/480	2	20/30
Donuts	360/390	2	30/40
Sweet puff pastry	390/420	2	15/20
Grape flatbread	490	2	25/35
Strudel	360	2	20/30
Savoiardi biscuits	360/390	2	40/50
Apple fritters	390/430	2	15/20
Savoiardi pudding	390/430	2	20/30
BAKERY			
Bread	430	3	30
Pizza	480	3	10/20
Toast	480	3	5

IMPORTANT: Introduce the food when the oven is preheated.

Grill cooking

For appliances with an electric grill, cooking is done with the door closed at 360°F. The food to be grilled should be placed on the corresponding grill, preferably on the fourth rack.

Position of cooking grids

There are 5 shelf position - 1 is the lowest and 5 is the highest near to the grill.

If cooking one dish use shelf position 3, if cooking more than one tray depending on the height of the tray or food is suggested to cook on shelf positions 2 and 4.

Use the 4 and 5 shelf position for grilling and the grill pan in the botton shelf 1 to cath any drips.

The lower shelp position 1 can be used to slow cooking down or the temperature can be reduced.

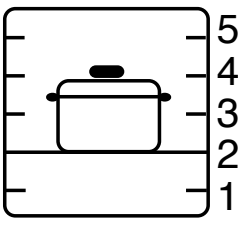

INSTALLATION

Key

00	Black
11	Brown
22	Red
33	White
44	Yellow
45	Yellow-green
55	Grey
66	Blue
AA	Electrical ignition transformer
C	Commutator
CA	Capacitor 1,05 µF
CCDF	Fry-Top switch
CP	Cooking probe
DM	Dumper microonde
DV	Dumper vapore
DS1	Burner control
DU	Wax thermal actuator discharging steam
DY	Display
EL	Solenoid valve
EN	Encoder
F	Phase
F1	Phase 1
FLC	LC Filter
FUSE	Fuse 10A
HVD	High voltage diode
K1	Earth wire terminal block
K2	Earth wire lower resistance
K3	Earth wire oven fan
K4	Earth wire circulating resistance
K5	Earth wire upper resistance
K6	Earth wire oven light 1
K7	Earth wire oven light 2
K8	Earth wire roaster
K9	Earth wire cooling fan.
K10	Earth wire commutator
K11	Earth wire oven thermostat
K12	Earth wire programmer/timer
K13	Earth wire grill resistance
K14	Earth wire piastra elettrica
K15	Earth wire frame
K16	Earth wire barbecue resistance
K17	Earth wire resistenza friggitrice
L1	Oven light
L2	Oven light
M	Terminal block
MA	Electrical ignition microswitch
MD	Grill microswitch
MG	Rotisserie
MGT	Magnetron
MP	Door microswitch
MMO	Monitor microswitch for microwave
MPR	Primary microswitch for microwave
MSEC	Secondary microswitch for microwave
MT	Micro cooling fan
MTK	Water loading tank microswitch
MVT	Cooling fan microswitch
N	Neutral
NTC	Temperature probe
P	Timer\Clock - Timer\Programmer
PB	Power board
PD	Pump
PE	Electric hotplate
PT1000	Temperature probe
R1	Upper resistance
R2	Lower resistance
R3	Grill resistance
R4	Circulating resistance
R5	Barbecue resistance
R6	Fryer resistance
RC	Boiler heating element
RE	Energy controller
RL	Limit resistance
S1	Oven warning light
S2	Mains power warning light
S3	Grill warning light
S4	Cooling fan warning
S5	Barbecue warning light
S6	Electric hotplate warning light
S7	Rotisserie warning light
S8	Residual heat warning light
S9	Fryer warning light
SA	Power supply board
SD	Display board
SE	Auxiliary power board
SI	Interface board
SL	Water level detector
SP	Power board
SR	Safety Relay
SWD	Warming drawer control board
T	Grill thermostat
TCO\TC1	Safety thermostat 318 °C (TCO)
TSPO	Safety thermostat 90 °C
TF	Oven thermostat
TR	Fryer thermostat\ High voltage transformer
TS\TS1\ TS2	Safety thermostat
TST	Tangential motor safety thermostat
TT	Tangential thermostat
V\VR	Oven fan
VT	Cooler fan

ELECTRICAL SKETCHES

GAS HOB

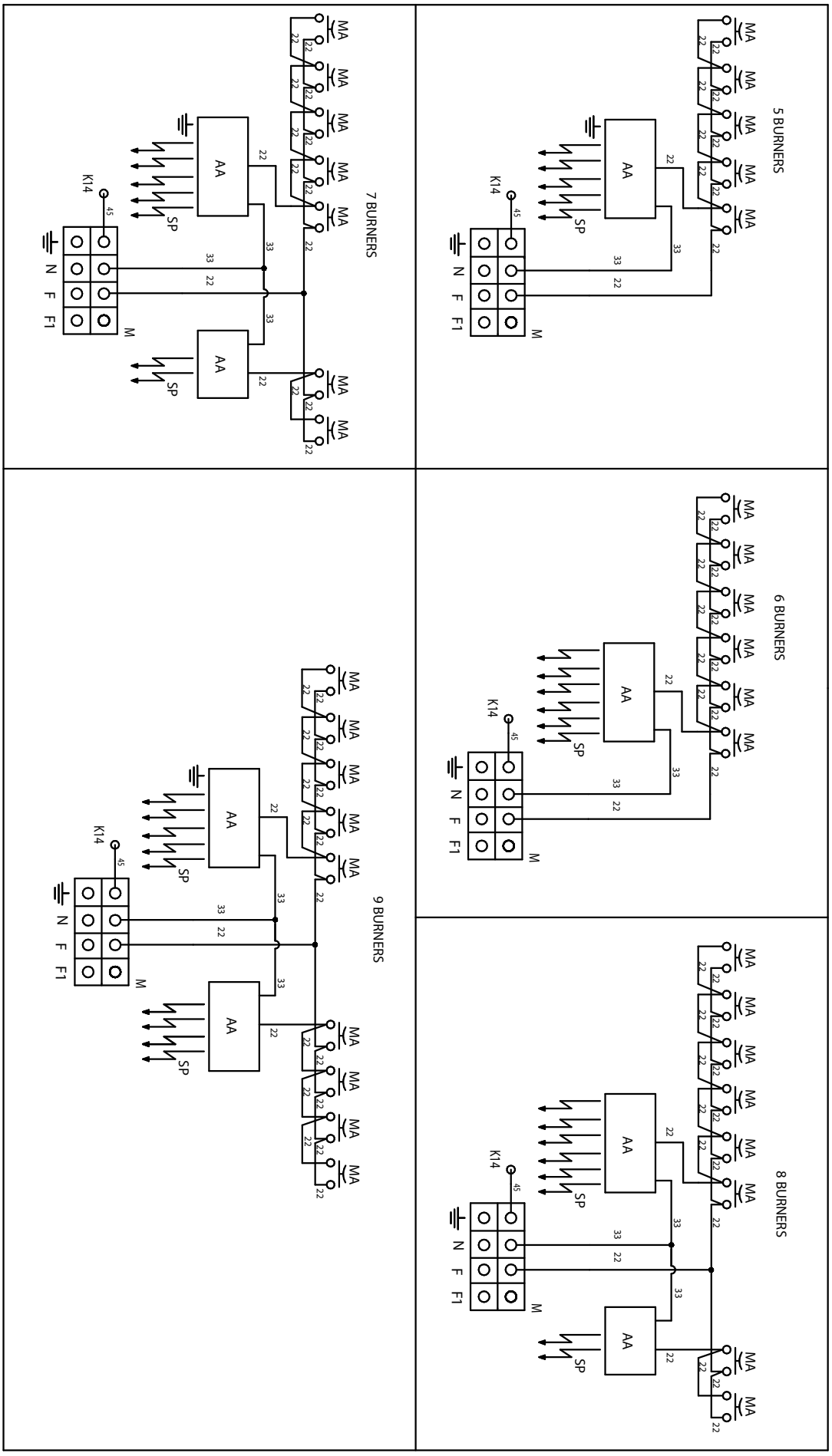

ELECTRICAL SKETCHES
4 INDUCTION ZONES

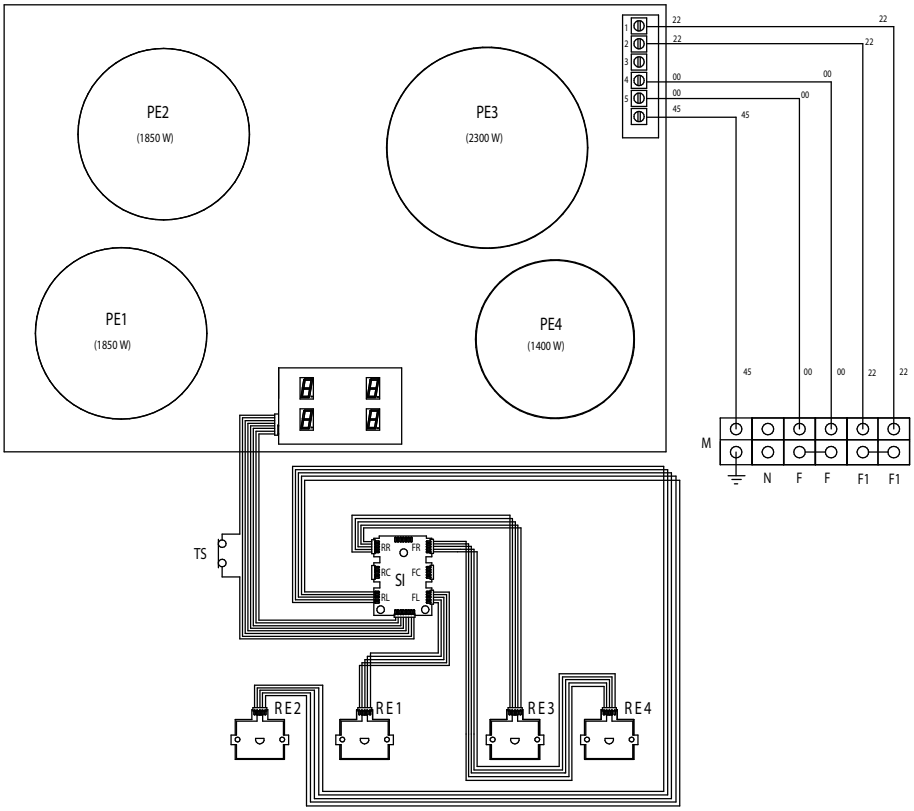

ELECTRICAL SKETCHES
6 INDUCTION ZONES

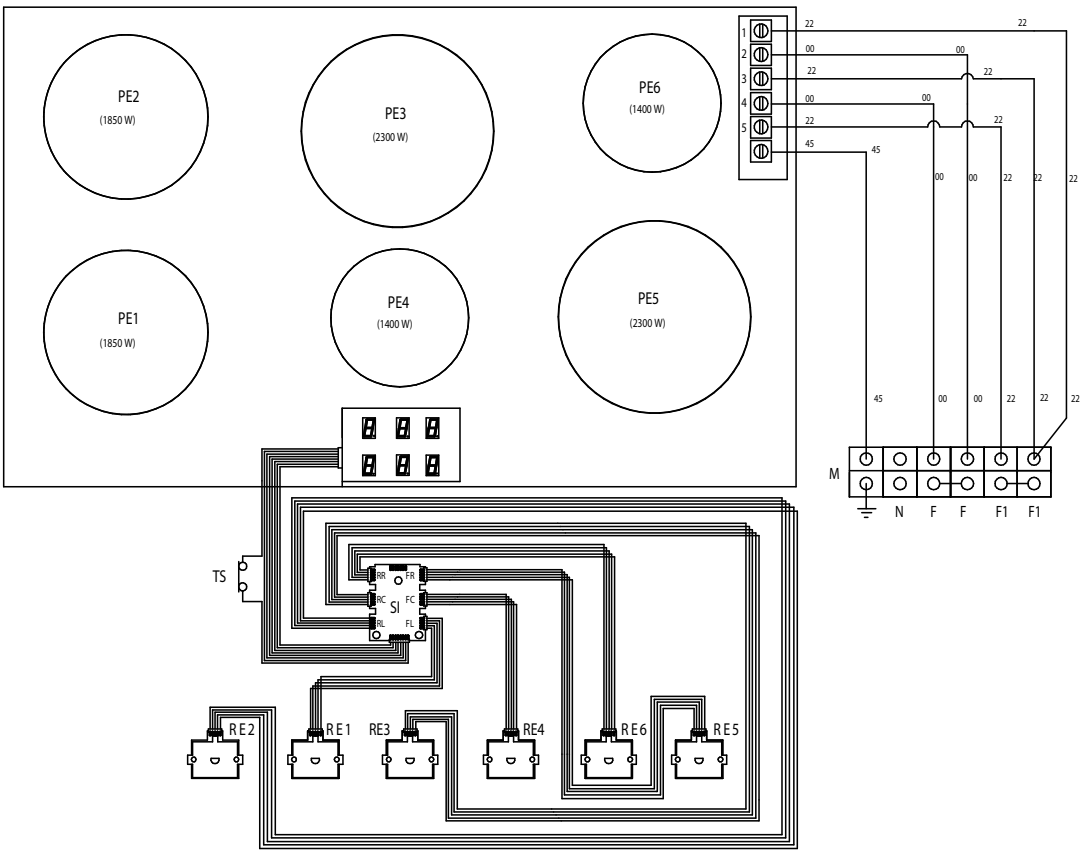

ELECTRICAL SKETCHES

U (P/N) 30...MP
U (P/N) I 30...MP

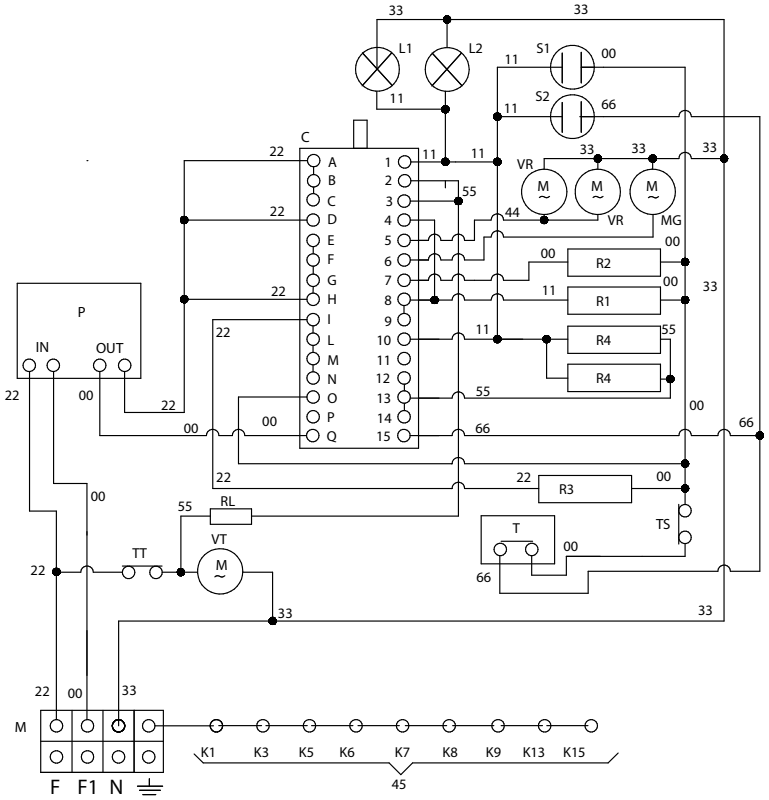

ELECTRICAL SKETCHES

U(P/N) 36MP - U(P-N) 361MP
U(P/N) I 36MP - U(P-N) I 361MP

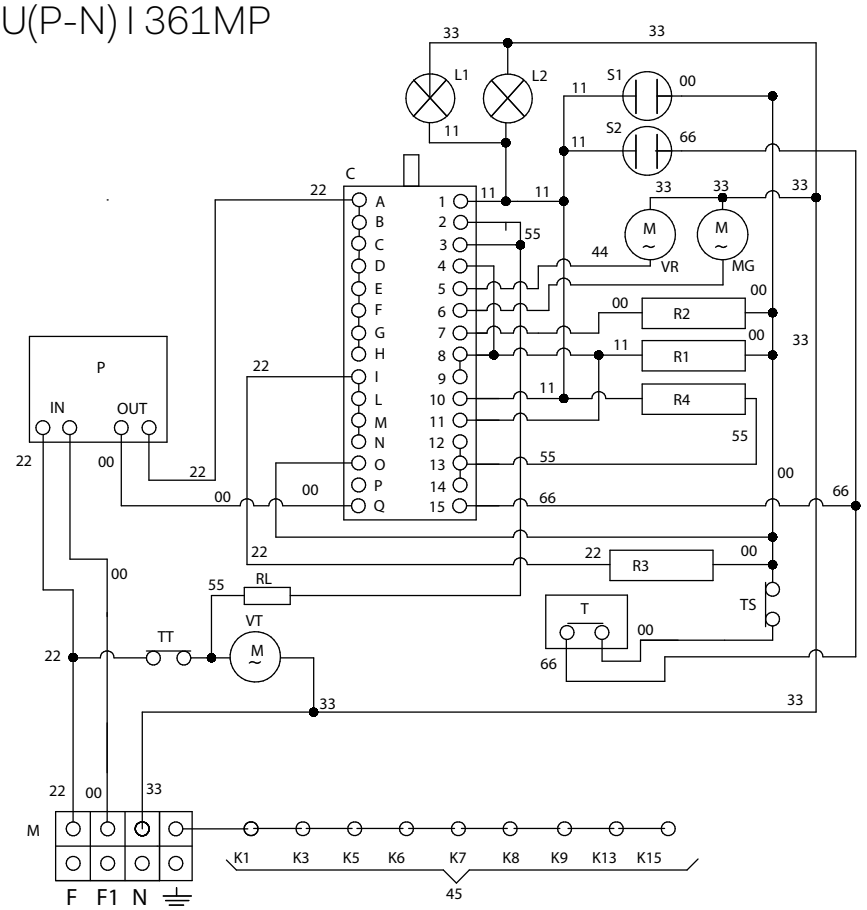

ELECTRICAL SKETCHES

U (P/N) 48...MP

U (P/N) I 48...MP

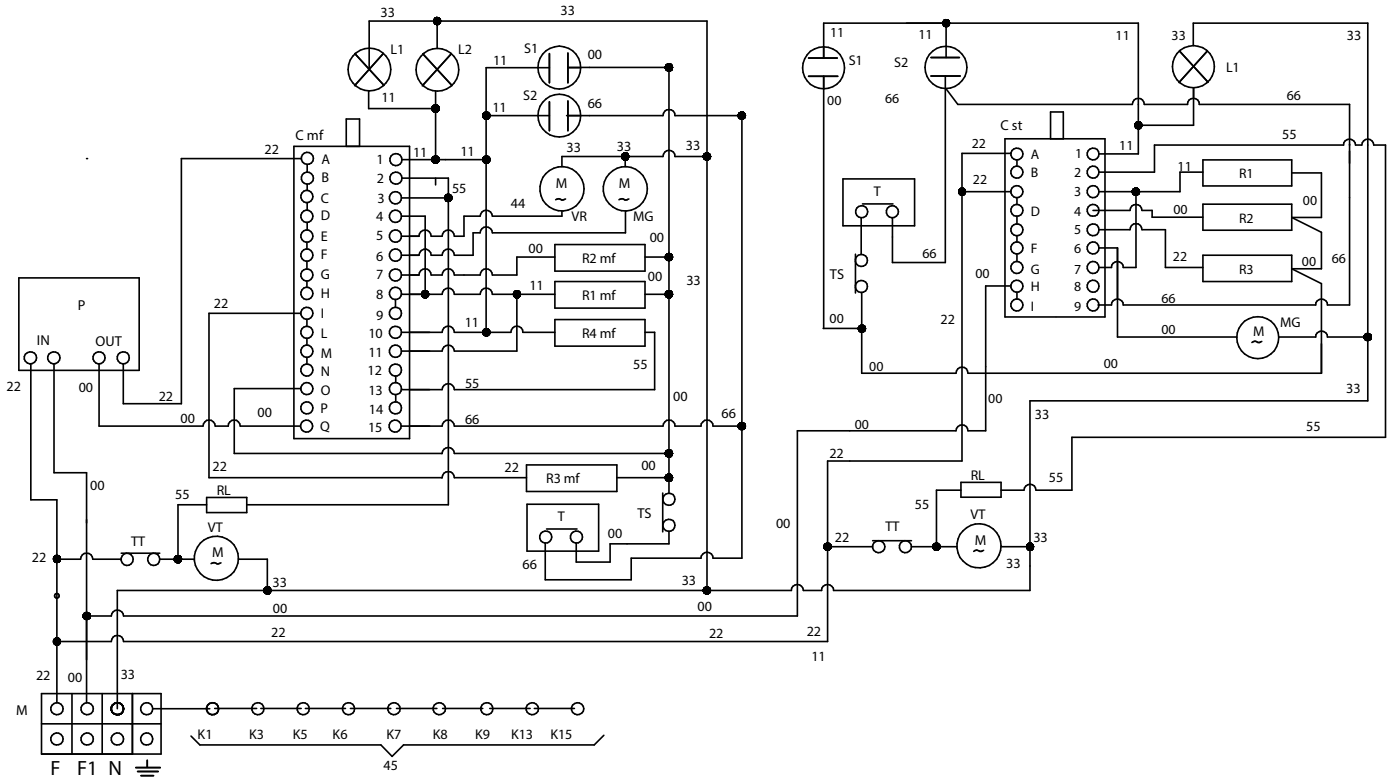

ELECTRICAL SKETCHES

U (P/N) 48...S MP

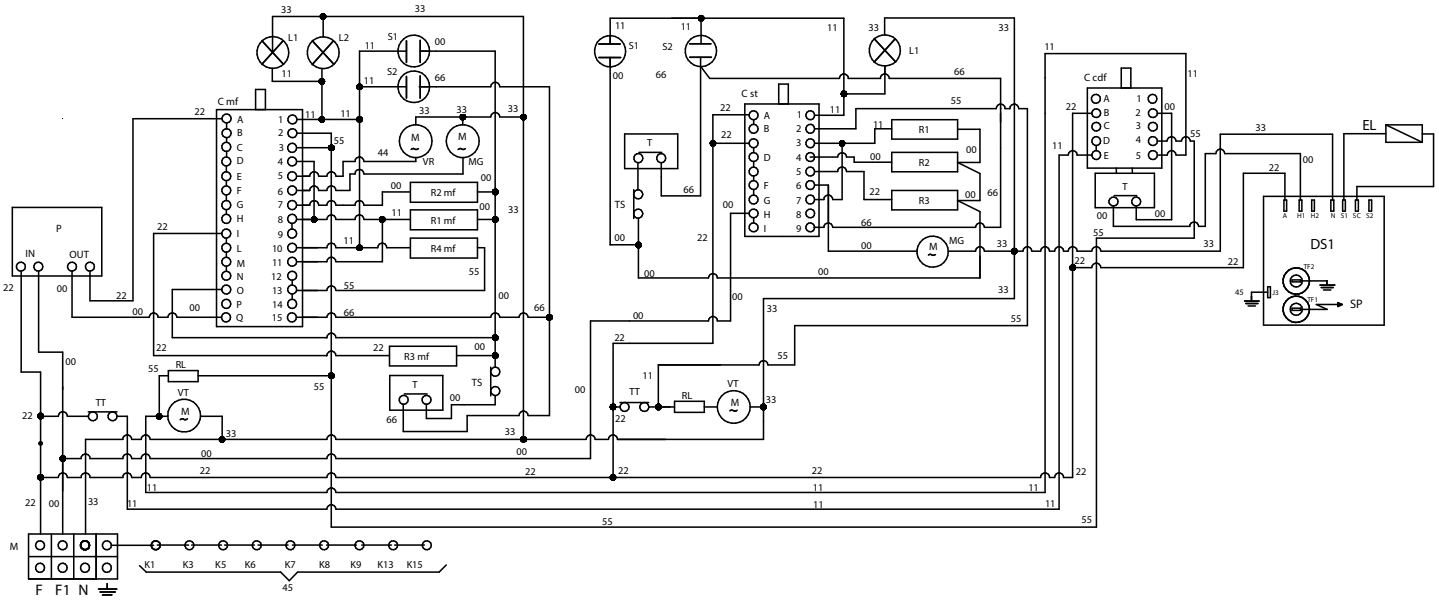

ELECTRICAL SKETCHES

U (P/N) 60...MP

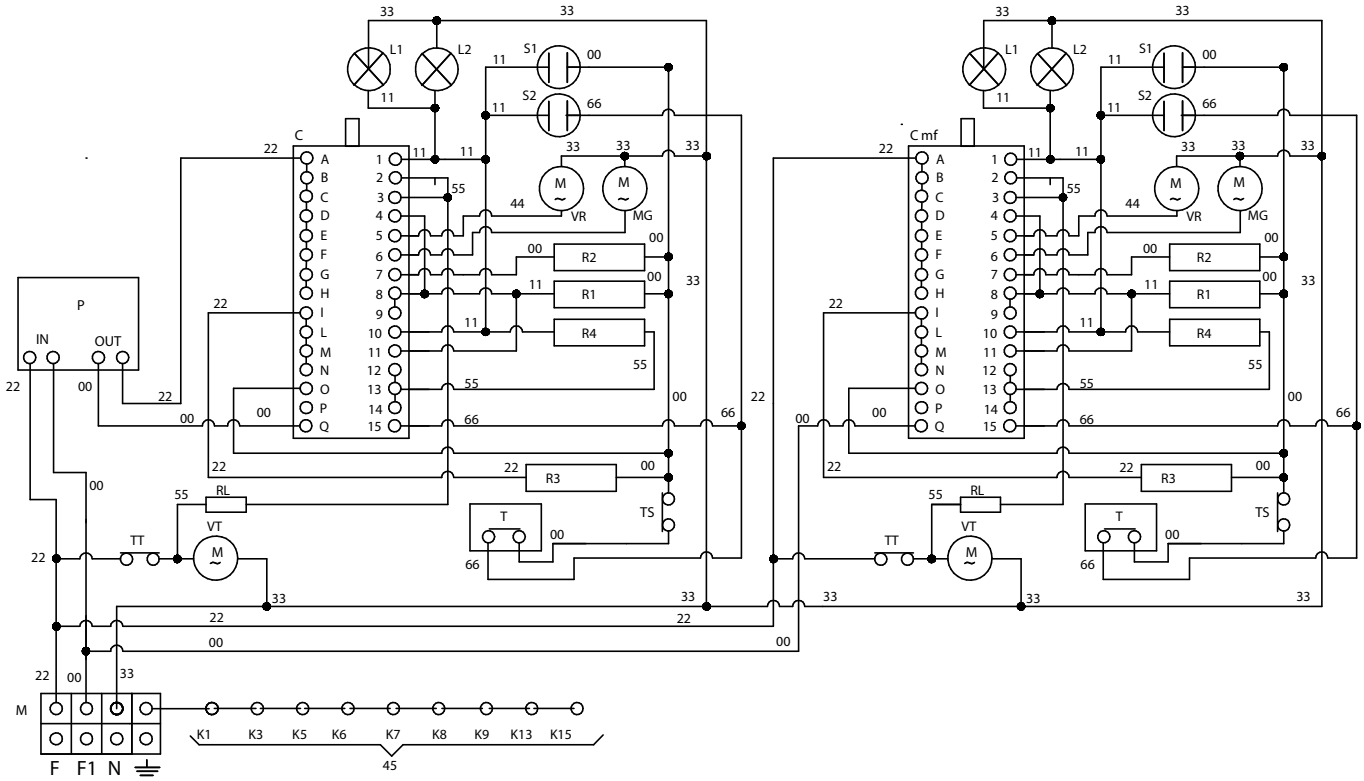

ELECTRICAL SKETCHES

U (P/N) 60... S MP

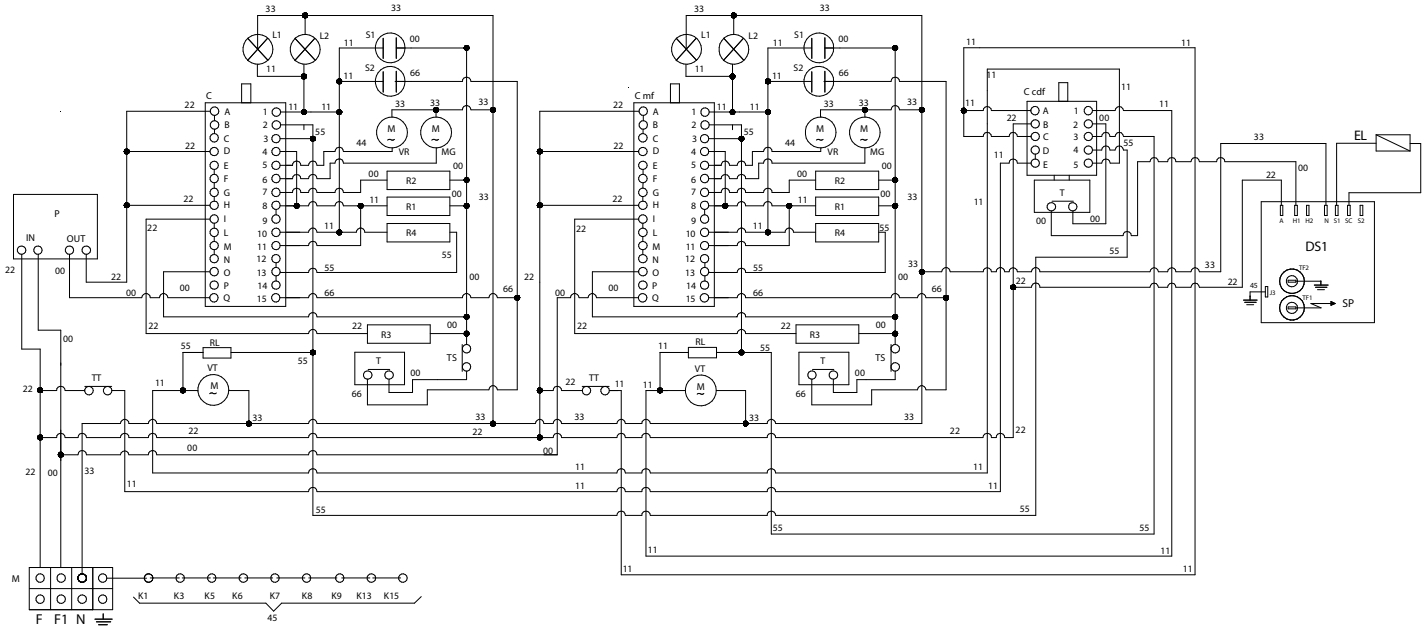

ELECTRICAL SKETCHES

U (P/N/) D 36...MP - U (P/N) D I 36...MP

U (P/N/) D 40...MP - U (P/N) D I 40...MP

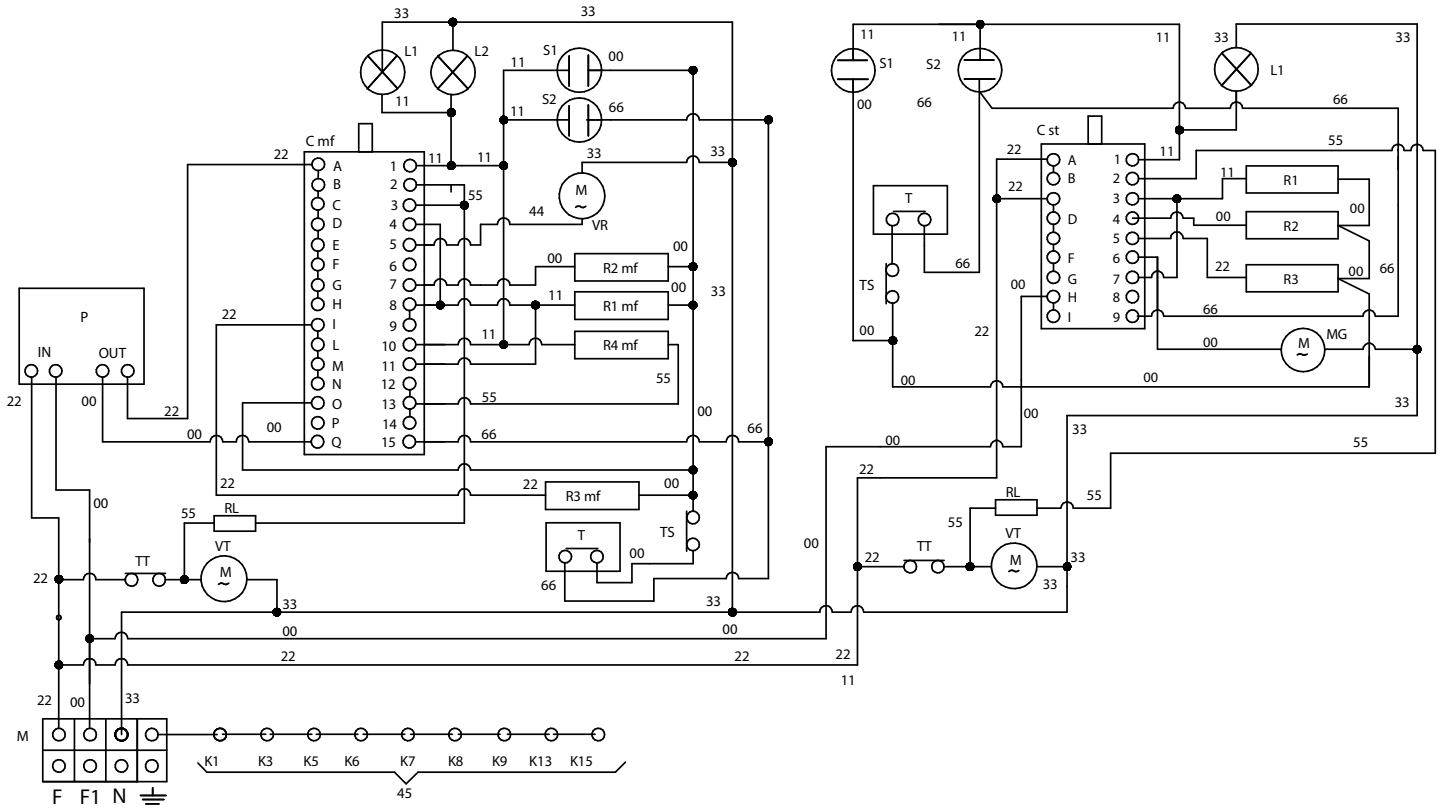

ELECTRICAL AND GAS POWER TABLE

TYPE U(P/N/T)

PROFESSIONAL COOKING BLOCK

	GAS POWER						ELECTRICAL POWER												
	TOP BURNER TYPE						ELECTRICAL OVEN												
	SR	C.D.F. (coup de feu)	R	DUAL	P	DCC	60cm El. multifunction oven (65 litres)	80cm El. multifunction oven (97 litres)	90cm El. multifunction oven (110 litres)	30" El. Multifunction oven (114 litres)	30cm El. conventional oven (43 litres)	40cm El. conventional oven (57 litres)	30cm ELECTRONIC conventional oven (43 litres)	40cm ELECTRONIC conventional oven (57 litres)	30" induction cooktop (4 zones)	100cm induction cooktop (6 zones)	warming drower	COMPLETE APPLIANCE GAS RATING [Btu/h]	COMPLETE APPLIANCE ELECTRIC RATED INPUT [kW]	COMPLETE APPLIANCE ELECTRIC RATED INPUT [A]
	Btu/h						kW												
Models	7000	5500	10500	25000	10500	16500	3,5	3,7	3,7	3,7	2,5	2,75	2,5	2,9	7,7	11,5	0,65			
UP30(W/N/Q/QN)(MP) UN30(W/Q/N/QN)(MP)	2		2	1						1								60000	3,70	15,4
UP30(W/N/Q/QN)(S3) UN30(W/Q/N/QN)(S3) UT30(W)S3	2		2	1						1							1	60000	4,35	18,1
UPI304(W/N/Q/QN)(MP) UNI304(W/Q/N/QN)(MP)										1					1			0	11,40	47,5
UPI304(W/N/Q/QN)(S3) UNI304(W/Q/N/QN)(S3) UTI304(W)S3										1					1		1	0	12,05	50,2
UP36(6/F)(W/N/Q/QN)(MP) UN36(6/F)(W/Q/N/QN)(MP)	1		3	2				1										88500	3,70	15,4
UP36(6/F)(W/N/Q/QN)(S3) UN36(6/F)(W/Q/N/QN)(S3) UT36(6/F)(W)(S3)	1		3	2				1									1	88500	4,35	18,1
UPI366(W/N/Q/QN)(MP) UNI366(W/Q/N/QN)(MP)								1								1		0	15,20	63,3
UPI366(W/N/Q/QN)(S3) UNI366(W/Q/N/QN)(S3) UTI366(W)(S3)								1								1	1	0	15,85	66,0
UP361(6/F)(W/N/Q/QN)(MP) UN361(6/F)(W/Q/N/QN)(MP)	1		3	2					1									88500	3,70	15,4
UP361(6/F)(W/N/Q/QN)(S3) UN361(6/F)(W/Q/N/QN)(S3) UT361(6/F)(W)(S3)	1		3	2					1								1	88500	4,35	18,1
UPI3616(W/N/Q/QN)(MP) UNI3616(W/Q/N/QN)(MP)									1							1		0	15,20	63,3
UPI3616(W/N/Q/QN)(S3) UNI3616(W/Q/N/QN)(S3) UTI3616(W)(S3)									1							1	1	0	15,85	66,0
UPD36(6/F)(W/N/Q/QN)(MP) UND36(6/F)(W/Q/N/QN)(MP)	1		3	2			1				1							88500	6,00	25,0
UPD36(6/F)(W/N/Q/QN)(S3) UND36(6/F)(W/Q/N/QN)(S3) UTD36(6/F)(W)(S3)	1		3	2			1						1				1	88500	6,65	27,7
UPDI366(W/N/Q/QN)(MP) UNDI366(W/Q/N/QN)(MP)							1				1					1		0	17,50	72,9
UPDI366(W/N/Q/QN)(S3) UNDI366(W/Q/N/QN)(S3) UTDI366(W)(S3)							1						1			1	1	0	18,15	75,6
UPD40(6/F)(W/N/Q/QN)(MP) UND40(6/F)(W/Q/N/QN)(MP)	1		3	2			1					1						88500	6,25	26,0
UPD40(6/F)(W/N/Q/QN)(S3) UND40(6/F)(W/Q/N/QN)(S3) UTD40(6/F)(W)(S3)	1		3	2			1							1			1	88500	7,05	29,4
UPD40(S)(W/N/Q/QN)(MP) UND40(S)(W/Q/N/QN)(MP)	1	1	2	1			1					1						58500	6,25	26,0
UPD40(S)(W/N/Q/QN)(S3) UND40(S)(W/Q/N/QN)(S3) UTD40(S)(W)(S3)	1	1	2	1			1							1			1	58500	7,05	29,4
UPDI406(W/N/Q/QN)(MP) UNDI406(W/Q/N/QN)(MP)							1					1				1		0	17,75	74,0
UPDI406(W/N/Q/QN)(S3) UNDI406(W/Q/N/QN)(S3) UTDI406(W)(S3)							1							1		1	1	0	18,55	77,3
UP48(8/F)(W/N/Q/QN)(MP) UN48(8/F)(W/Q/N/QN)(MP)	2		4	2				1			1							106000	6,20	25,8
UP48(8/F)(W/N/Q/QN)(S3) UN48(8/F)(W/Q/N/QN)(S3) UT48(8/F)(W)(S3)	2		4	2				1					1				1	106000	6,85	28,5
UP48(S)(W/N/Q/QN)(MP) UN48(S)(W/Q/N/QN)(MP)	1	1	2	1	1			1			1							69000	6,20	25,8
UP48(S)(W/N/Q/QN)(S3) UN48(S)(W/Q/N/QN)(S3) UT48(S)(W)(S3)	1	1	2	1	1			1					1				1	69000	6,85	28,5
UPI486(W/N/Q/QN)(MP) UNI486(W/Q/N/QN)(MP)								1			1					1		0	17,70	73,8
UPI486(W/N/Q/QN)(S3) UNI486(W/Q/N/QN)(S3) UTI486(W)(S3)								1					1			1	1	0	18,35	76,5
UP60(9/F)(W/N/Q/QN)(MP) UN60(9/F)(W/Q/N/QN)(MP)	2		4	2	1		1	1										116500	7,20	30,0
UP60(9/F)(W/N/Q/QN)(S3) UN60(9/F)(W/Q/N/QN)(S3) UT60(9/F)(W)(S3)	2		4	2	1		1	1									1	116500	7,85	32,7
UP60(S/FS)(W/N/Q/QN)(MP) UN60(S/FS)(W/Q/N/QN)(MP)	2	1	3	1	1		1	1										86500	7,20	30,0
UP60(S/FS)(W/N/Q/QN)(S3) UN60(S/FS)(W/Q/N/QN)(S3) UT60(S/FS)(W)(S3)	2	1	3	1	1		1	1									1	86500	7,85	32,7

NOTE

Injectors for a device installed at an altitude above 2000 ft

List with common types of soiling and recommendations how to treat them:

BURNERS	GAS	ORIFICE SIZE (1/100) mm
SR	NATURAL (A)	117
R	NATURAL (A)	141
DCC	NATURAL (A)	185
DUAL	NATURAL (A)	74+215
P	NATURAL (A)	141
CDF	NATURAL (A)	108
SR	PROPANE (E)	74
R	PROPANE (E)	87
DCC	PROPANE (E)	112
DUAL	PROPANE (E)	43+130
P	PROPANE (E)	88
CDF	PROPANE (E)	62

Safety Warnings - Thermostat

The cooker is fitted with a safety thermostat that stops the operation in case the oven temperature rises too high. Each oven has its own device. After the appliance has cooled down, it is possible to try to restart it (if the safety thermostat tripped) by manually resetting the contact. To perform the manual reset follow this procedure:

First of all, disconnect the appliance from the mains by pulling the plug from the wall socket or switching OFF the bipolar switch in the house wiring.

Open and remove the drawer under the ovens (pull outwards and lift), or remove the front panel (pull outwards to disengage the spring pins).

Locate the safety thermostat, screwed to the chassis on the side and in backward position (for cookers with only one oven it is on the left side). See picture A

Insert from underneath upwards the point of a sharp object (e.g. a pen) into the thermostat recess until a click is heard. See picture B

Reassemble the drawer or the front panel and connect again the appliance to the mains.

Check if the oven works. (If not, it is necessary to call the Customer Service).

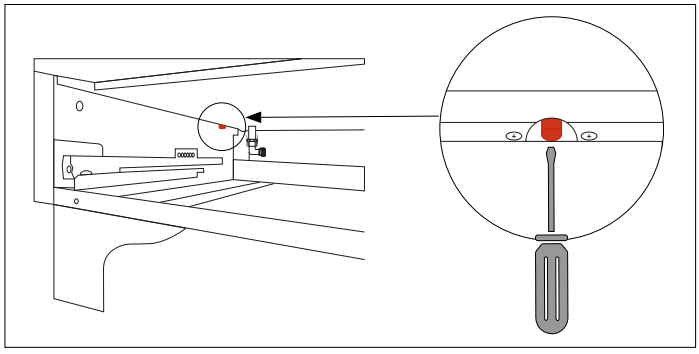

Live,
Cook,
Love.

ilve.com

ILVE S.p.A Via Antoniana, 100 — 35011 — Campodarsego (PD) Italy
T. +39 049 9200990 / Email: mail@ilve.com

cod. EI33960440000EN 48/2025