EVERY THING YOU NEED TO KNOW ABOUT YOUR XO

XOPIZZA4H - Hybrid

GAS FIRED PIZZA/HEARTH OVENS

I worked really hard on this manual - so please read it.

XO

When buying any XO appliance,
you can be confident you have chosen a
high quality, innovative and stylish product
from a company that cares about you!

If you require service or have questions,
there are 2 ways to contact our appliance experts;

Online @ https://xoappliance.com/priority-service-for-your-xo-product/

Or by phone 973-403-8900

CONGRATULATIONS

on purchasing your XO.
Before you proceed, take just a
moment to register your XO at:

www.xoappliance.com/register-your-product/

Or simply scan here to be taken
to the registration page...

REGISTRATION HELPS YOU BY -

Ensuring warranty coverage should you need service
Providing ownership verification for insurance purposes
XO can notify you in the event of product changes or recalls.

WHERE THINGS ARE

Before You Get Started 4 - 7
Record your serial number
Your safety matters
Dimensions

Using Your Oven 8 - 12
Handy Tips
Installation
Gas Connection
Lighting the Gas Oven

Wood-Fired Optional Use 13 - 15
Set Up and operation wood-fired

More Cooking 16
Cooking tips

Maintenance & FAQs 17 - 19
Changing the battery & Cleaning
Frequently Asked Questions

All The Rest 20
Warranty
Obtaining service

PLEASE READ AND FOLLOW
ALL SAFETY INSTRUCTIONS

It's for your
own good...
Honest.

THIS IS THE MODEL COVERED IN THIS BOOK

GAS-FIRED HYBRID PIZZA OVENS

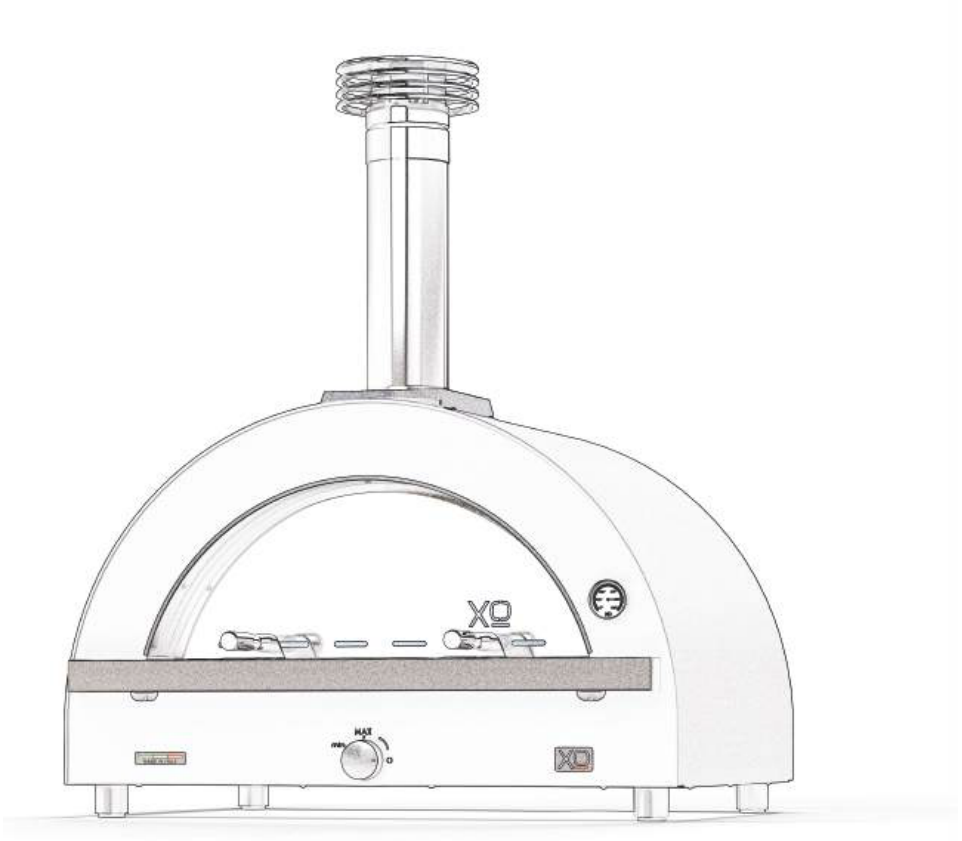

XOPIZZA4H

RECORD YOUR SERIAL NUMBER
HERE IN CASE YOU NEED IT LATER

YOUR SAFETY MATTERS

THIS APPLIANCE GENERATES EXTREME HIGH TEMPERATURES. Always use caution when lighting or using your oven. FAILURE TO FOLLOW THESE INSTRUCTIONS COULD RESULT IN SERIOUS PROPERTY DAMAGE, BODILY INJURY OR DEATH.

SAVE THESE INSTRUTIONS FOR REFERENCE.

CAUTION: ONLY USE THIS OVEN OUTDOORS IN A WELL VENTILATED AREA ONLY.
Do not use in a garage, building, breezeway, or any other enclosed area.
Keep the oven on a secure, level surface at all times.
Do not use oven within three feet of any combustible material.
Combustible materials include, but are not limited to, wood or treated wood decks, patios and porches.

Use only cooking materials, containers, utensils, gloves and pot holders etc designed for high temperatures.

KEEP CHILDREN AND PETS OUT OF REACH WHILE THE OVEN IS IN USE.

Please read the entire manual before you install thi soven. Contact your local building or fire official about restrictions and installation inspection in your area.

FOR YOUR SAFETY: Do not store or use gasoline or other flammable vapors or liquids in the vicinity of this or any other appliance. Always keep the area under and around this appliance free and clear of any and all combustible materials.

Outer oven surfaces can reach temperatures above 120°F.

Keep all combustible materials beyond a three (3) foot minimum radius of the oven.

CAUTION: When being used, place the oven at a safe minimum distance from flammable materials or any other substance that can be damaged by heat.

OVENS MUST BE PLACED ON LEVEL, FIREPROOF SURFACES WITH ENOUGH LOAD BEARING CAPACITY TO ACCOMODATE 150 lbs.

Never move the oven while in use.

If using the wood fired option, **BURN DRY, WELL SEASONED HARDWOOD ONLY AS FUEL.** You cannot burn gas and wood at the same time. Do not use your oven to burn other materials.

For use beneath any structure, consult your code official as to local regulations and enlist the assistance of a professional skilled in the installation of wood burning stoves. Do not use indoors! This oven is designed for outdoor use in a well-ventilated area and is not intended for and should never be used as a heater. If used indoors, toxic fumes will accumulate and cause serious bodily injury or death.

Position the oven on a flat, level, fireproof surface where it is protected from strong winds. Sparks may be ejected from the oven during operation - make certain to rem ove any materials which are flammable or may be damaged by hot sparks from the vicinity of the oven.

YOUR SAFETY MATTERS CONT.

NEVER LEAVE THE OVEN UNATTENDED DURING USE

IF YOU ARE USING THE WOOD BURNING OPTION - THE BURNER MUST BE OFF AND THE METAL BURNER COVER MUST BE IN PLACE. FOLLOW THE ADDITIONAL INSTRUCTIONS BELOW:

To extinguish the gas burner, follow the instructions on page 11, turning the control knob all the way clockwise.

To extinguish a wood fire, place the door into the oven mouth sealing the oven and allow the fire to burn itself out. **NEVER THROW WATER ONTO THE FIRE.**

IF BURNING WOOD, LEAVE THE DOOR CLOSED FOR AT LEAST 30 MINUTES AFTER THE FIRE GOES OUT EXERCISE CAUTION OPENING THE DOOR AFTERWARD. THE RE-INTRODUCTION OF AIR SUDDENLY CAN CAUSE THE FIRE TO BURST BACK INTO FLAME.

Avoid excessively large wood fires which cause flames to come back out the door. If this occurs close the door until the flames die down.

Do not throw wood into the oven, damage to the interior may result. Place wood using tongs and/or fire proof gauntlets designed for that purpose.

Burn only well seasoned, dry hardwood. Never burn pressure treated, laminated or finished wood. Never use chipped or wood pellet products. Never use softwood such as pine or fir.

NEVER BURN CHARCOAL, COAL OR ARTIFICIAL LOGS. NEVER USE STARTER/LIGHTER FLUID, KEROSENE, OILS, GASOLINE, OR ANY OTHER ACCELERANTS.

When cooking dishes that may contain grease or oils, use caution to avoid spills which could ignite.

Keep a safe distance of at least 24” away from the front of the oven when lighting.

If the oven has been used in wood fired mode, after the oven and burned debris are completely cold carefully remove all ash from the interior using a metal shovel and place in a metal, fire-proof container for 2-3 days to ensure any embers are completely out before disposing of safely in accordance with any local requirements.

NEVER PLACE ANY SEALED TINS, CANS OR CONTAINERS IN A HOT OVEN. AS THE CONTENTS ARE HEATED, BUILDING PRESSURE CAN RESULT IN AN EXPLOSION HAZARD.

IN THE EVENT OF A GREASE FIRE - CLOSE THE DOOR AND WAIT FOR THE FIRE TO BE COMPLETELY EXTINGUISHED. WARNING - RE-OPENING THE DOOR TOO SOON MAY CAUSE THE FIRE TO RE-IGNITE.

NEVER BURN WOOD IN THE OVEN WHILE OPERATING THE GAS BURNER.

DIMENSIONS

XOPIZZA4H__

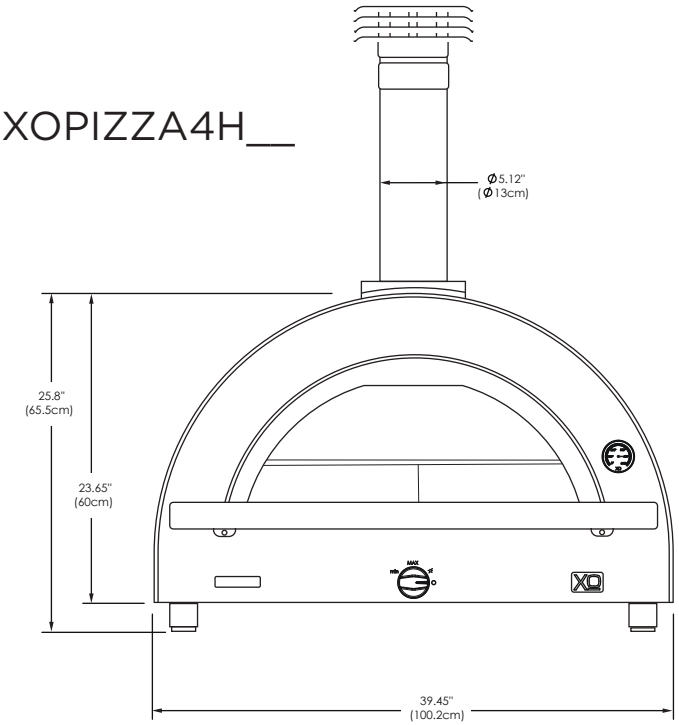

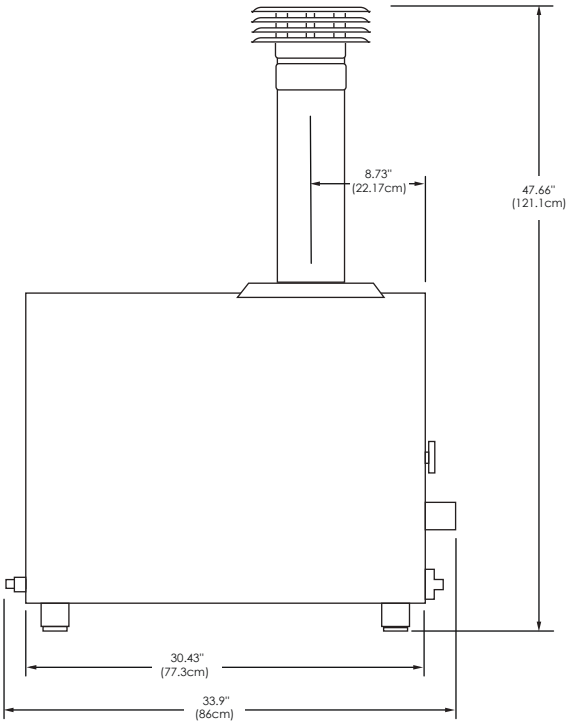

OPTIONAL XOPIZZACART1

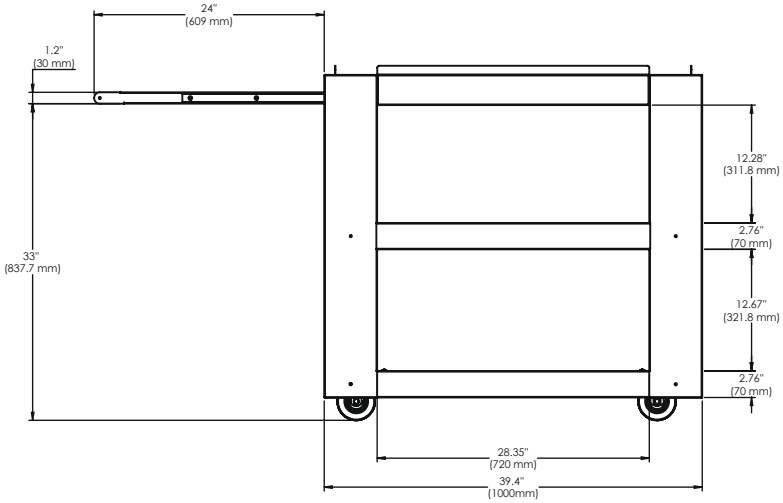

SHOWN WITH GLIDE OUT SIDE SHELF EXTENDED

HANDY TIPS

Some parts have a plastic film on them that protects them during manufacture. Remove all of this protective film before any assembly or use. This will prevent it from getting trapped between parts during assembly.

Failure to remove the plastic will result in it “Baking” on to the surface making it very difficult to remove.

If you are having trouble removing the plastic film, warm the surface with a hair dryer. Do not use a scraper or knife as this will scratch the surface.

When cleaning your oven, do not use scouring pads or metal scrapers - this can damage the finish of your oven.

To clean your oven exterior, use warm soapy water with a mild, non-abrasive cleaner.

Some parts of the oven may experience discoloration from the high temperatures, such as the chimney. This is normal and does not affect the oven performance.

Your XO Oven can be used throughout the year. However, during cold months when the outside temperature is near or below freezing, heat the oven slowly allowing the unit to warm up gradually. Rapid temperature changes can thermally shock parts of the oven resulting in premature stress cracking particularly of the ceramic hearth.

Chips and hairline cracks in the refractory will normally form over time and these will not adversely affect oven performance.

Always close the oven door when not in use - this will help prevent rain and other elements from entering the oven. It is also recommended the oven be covered.

INSTALLATION

LOCATION:

Use this oven outdoors in a well ventilated area only.

The outer surfaces of the oven can reach HIGH TEMPERATURES during operation and different surfaces will heat up differently.

Always assume all surfaces are HOT and exercise appropriate care. Use hot pads and insulated gloves in handling.

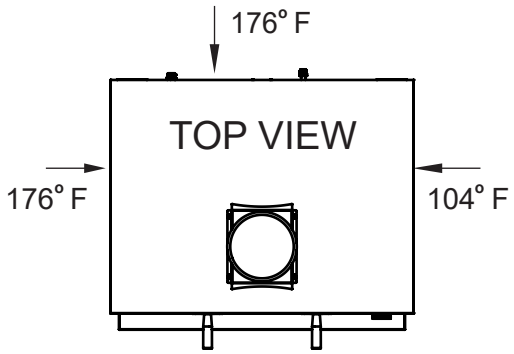

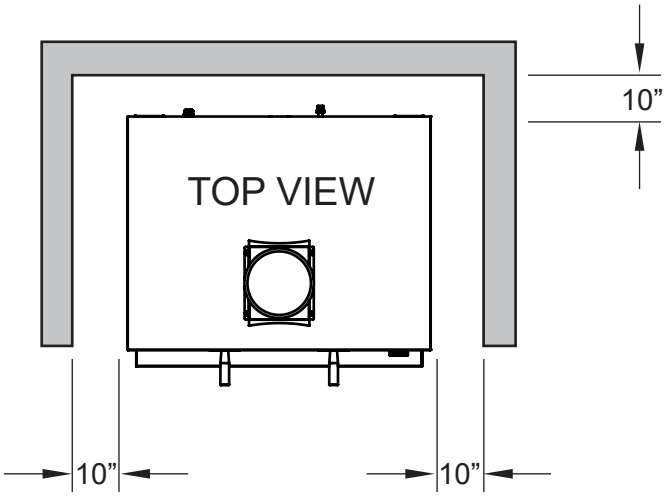

CAUTION:
Position the oven a minimum distance of 10 inches from all non-combustible walls and from any other equipment. When installing the gas oven, the gas regulator must be accessible for maintenance or gas changes.
The GAS ISOLATION VALVE MUST BE READILY ACCESSSIBLE.

CAUTION:
Locate the oven a safe distance (a minimum of 3 feet or 1 meter) from all flammable materials or construction, this includes all materials that may be damaged or affected by heat

CAUTION:
Place the oven on a flat, stable surface to prevent it from moving during use.

COUNTER TOP OVENS SHOULD BE PLACED ON FIXED TABLES OR TABLES WITH LOCKING WHEELS OR OTHER FIREPROOF SURFACES WITH ADEQUATE LOAD-BEARING CAPACITY (+150 lbs).
IF NEEDED, ADJUST THE LEGS TO LEVEL THE SUPPORTING SURFACE.

ANY FLAMMABLE MATERIAL SHOULD BE KEPT AT LEAST 3 FEET (1 METER) AWAY FROM THE OVEN.

WARNING! CALIFORNIA PROPOSITION 65

1. The burning of gas cooking fuel generates some by-products which are on the list of substances which are known by the State of California to cause cancer or reproductive harm.
2. California law requires businesses to warn customers of potential exposure to such substances. To minimize exposure to the substances, always operate this unit according to the use and care instructions found in this manual. Be certain to provide adequate ventilation when cooking.
3. Warning: Handling the brass material on this product exposes you to lead, a chemical known to the state of California to cause cancer, birth defects or other reproductive harm. (Wash hands after handling this product.)
4. For more information go to this website: www.p65warning.ca.gov

GAS CONNECTION

Make certain that the **Control Knob is in the Full OFF Position.** Connect to the regulator supplied to the burner at the rear of the oven using teflon tape to seal all threaded connections.
Connect the gas line to the **SOURCE SIDE** of the regulator.
Make sure the Gas Regulator is connected in the correct direction to the oven burner.
The regulator and Gas Isolation Valves MUST be readily accessible.

CAUTION: Gas Regulators permit gas flow in one direction only.

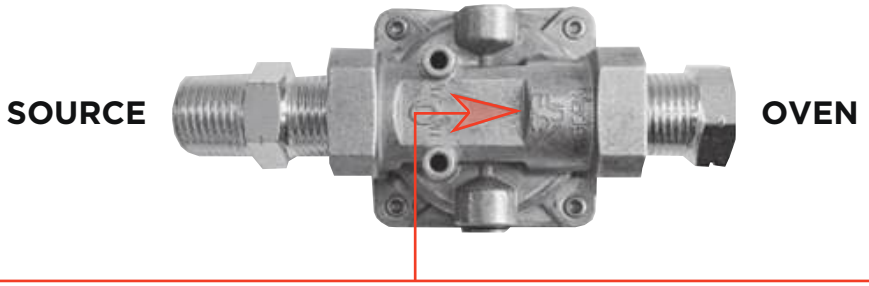

Flow Directional Arrow Is Embossed In The Bottom Of The Regulator

Your oven arrives set to burn either PROPANE or NATURAL GAS which is specified at time of purchase. Only connect to that type of fuel. If your model number ends with the letter "L" it is set up to burn propane. If your model number ends with the letter "N" it is set up to burn natural gas. Using the incorrect type of fuel will result in a dangerous condition.

Your oven can be converted, however, this service should only be performed by experienced, professional technicians. Some states and jusidictions require that connection to a gas source must be done by a licensed installer.

NOTICE: COMMONWEALTH OF MASSACHUSETTS
1. Massachusetts requires all gas be installed using a plumber or gas fitter carrying the appropriate Massachusetts license.
2. All permanently-installed natural gas or propane installations require a "T" handle type manual gas valve be installed in the gas supply line to this appliance.
3. This does not apply to portable propane installations using a 20 pound cylinder

BEFORE USING CHECK ALL CONNECTIONS FOR GAS LEAKS.
Never test for leaks with an open flame.
Prior to first use, at the beginning of each season, or every time your LP Gas tank is changed, **you must check for gas leaks.**

FOLLOW THESE THREE IMPORTANT STEPS:
1. Make a soap solution by mixing one part liquid detergent and one part water.
2. Turn the Control Knob to the full OFF position, then turn the gas ON at source.
3. Apply the soap solution to all gas connections. If bubbles appear in the soap solution connections are not properly sealed. Check each fitting - tighten or repair as needed.

LIGHTING THE OVEN CONT.

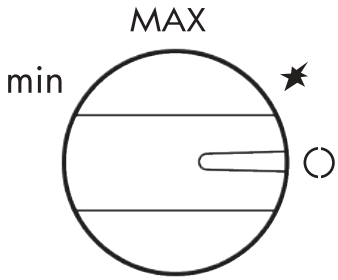

The knob shown in the OFF ◯ position.

NOTE: ALWAYS PUSH THE KNOB IN WHILE TURNING.

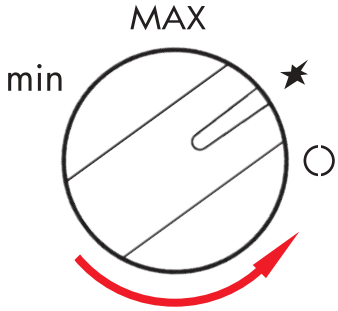

2. Press the burner knob and while holding it in - turn the knob counter-clockwise to the IGNITE ✶ position. Continue holding the knob in for 10 seconds after the pilot flame lights.
This will give the thermocouple safety feature time to heat up. Releasing the knob too early may cause the flame to go out. If this occurs turn the knob to the OFF ◯ position and wait 5 minutes for gas to dissipate before attempting to re-light the burner.

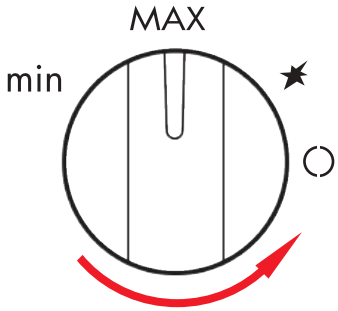

3. After the pilot flame remains lit, turn the knob counter-clockwise to the "MAX" position. This will turn the burner on full power.

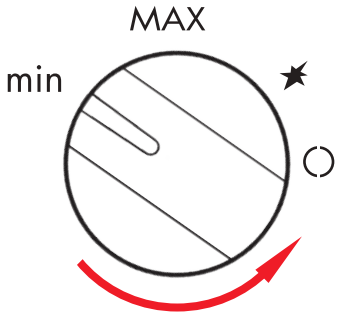

4. To reduce the burner, continue to turn the knob counter-clockwise toward the "min" position.

5. To turn the main burner off and leave the pilot light on press the knob in and turn it clockwise back to the IGNITE ✶ position.
To turn the oven off completely, press the knob in and turn it clockwise back to the OFF ◯ position. Then close the gas supply valve.

LIGHTING THE OVEN CONT.

NOTE:
Lighting the flame for the first time or after it has cooled could take time and possibly a few attempts due to air in the supply line.
Be patient as the gas makes its way to the burner.

After lighting: Partially close the oven door to preheat the cooking chamber.
Preheat the oven for 25 minutes to allow the fire bricks to get the desired temperature.
Use a laser thermometer to check the oven floor temperature. The floor should reach the temperature of 600°-700°F to make thin crust pizza.

FOR YOUR SAFETY:
- Do not close the door when the oven is lit with the flame at the maximum position. You must leave a 1-2" gap all the way around the oven opening to ensure adequite air for combustion.
- Do not exceed the temperature limit of 1000°F / 500°C.
- Never attempt to disconnect the gas pipe or other fittings when using the oven.
- Never move the oven while the burner is operating or while the oven is hot.

COOKING TEMPERATURES

Pizza	662-752 °F	350-400 °C
Meat & Fish	572 °F	300 °C
Potatoes & Vegetables	392 °F	200 °C
Bread & Cakes	392 °F	200 °C

WOOD-FIRED OPTION

Your XOPIZZA1AGAS Oven has the ability to operate using a hardwood ffire as a heat source. In order to use this option, perform the following steps:

1. TURN OFF THE GAS AT THE SOURCe BY CLOSING THE ISOLATION VALVE LOCATED AT THE TANK OR GAS SUPPLY LINE.

2. MAKE CERTAIN THAT THE INTERIOR OF THE OVEN IS SWEPT CLEAN OF ALL ASH AND DEBRIS.

3. INSTALL THE BURNER COVER SUPPLIED WITH THE OVEN OVER THE BURNER SO THAT IT LAYS FLAT AND COVERS THE BURNER COMPLETELY

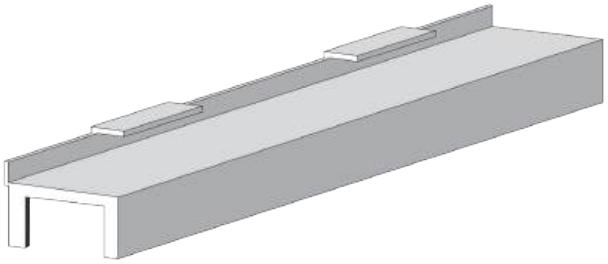

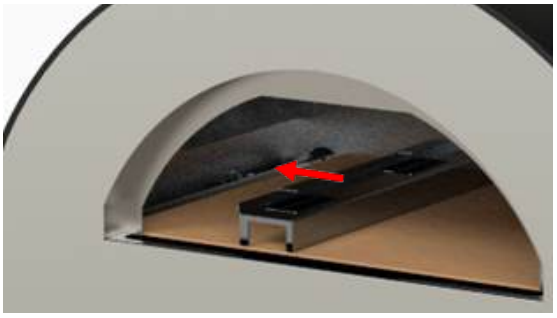

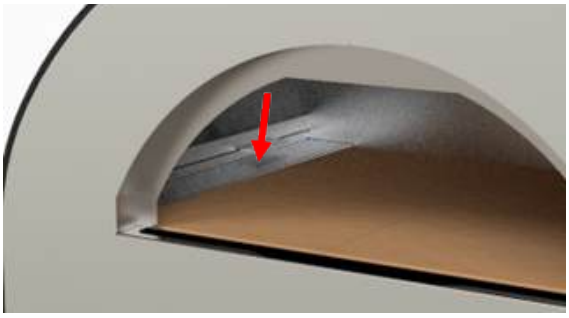

Install the fire grate (supplied with the oven).

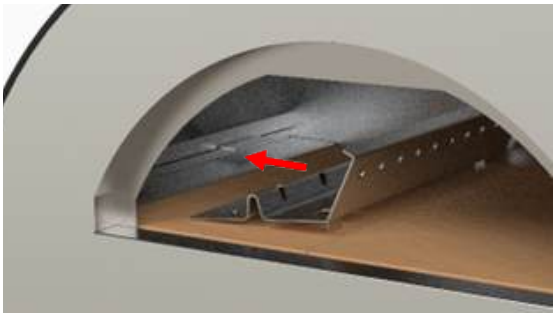

BURN HARDWOOD ONLY. NEVER USE FLAMMABLE LIQUIDS OR CHARCOAL.
If cooking pizza directly on the oven floor - build the fire directly in the center of the oven. After approximately 20 minutes, use the fire grate to collect the burning wood, embers and hot coals and move them to the left hand side of the oven.
CAUTION: SEVERE BURN HAZARD. Use fire-rated gloves and long handled pliers or vise grips to move the fire grate safely.

WOOD-FIRED OPTION

LIGHTING THE OVEN

Build your fire in the mouth of the oven using dry, seasoned hardwood witth crumpled newspaper or an approved firestarter. **NEVER USE ACCELERANTS TO START YOUR FIRE.**

Use a log positioned sideways to evenly push the wood straight back into the center of the oven floor. Remove the sideways log and your fire is ready to light using a long match, long reach lighter or torch.

Allow the fire to burn robustly for approximately 20 minutes. The air temperature should be about 650° the floor temperature once you move the fire to the left side (Floor temperature should be about 750°) Use the wood grate (included) to contain the fire, sweep the floor clean and you are ready to cook.

TYPES OF WOOD MATTER

Hardwood comes from deciduous trees that lose their leaves in winter. These include oak, walnut, maple, beech, ash, hickory and many more varieties.

The most important requirement is to use hardwood which is dry and well seasoned. If the wood is wet or green, it will be harder to light, produce more smoke and will not generate as much heat while burning. If you hear a “hissing” sound while burning, it is an indicator that the wood is still green.

Do Not Use Softwood like pine, fir or spruce. Softwood contains resins and sap that can leave a sticky residue. It burns faster and produces less heat. it can also pop and spark scattering ash on the food.

Different varieties of hardwood can also impart different arromas to what you are cooking, fruit woods like apple or cherry for example can be very aromatic.

MANAGING TEMPERATURE

The thermometer on your oven is a general guide. Different areas of the oven will vary.

Floor temperature will be different from side to side for example. The oven chamber will be hotter at the top of the dome. Cooking in a wood-fired oven has a learning curve just like a charcoal BBQ.

Always preheat your oven prior to use. If you are cooking directly on the hearth (such as pizza) build your fire in the center and heat the floor first. If you are baking or roasting - you may wish to build your fire to the side and not let the oven get as hot.

Once yu achieve your desired temperature feed the fire small to medium sized pieces of wood every 10-15 minutes to maintain a reletively consistent temperature.

On cold or windy days expect longer heat up and cooking times.

WOOD-FIRED OPTION

Tips For Cooking Using The Oven As A Wood-Fired Appliance:

WARNING: Never Burn Wood While Using The Gas Burner

Cooking in a wood burning oven requires more of a learning curve than a gas oven. Cooking times can vary based on the size of and type dishes being prepared.

Generally, cooking in a wood-fired oven is done by cooking the the foods that require the highest temperature and have the shortest cooking times first such as pizza. As the oven cools, other foods would follow such as grilled meats, then roasted vegetables, fish and finally breads or desserts.

OPEN DOOR COOKING

Open door cooking is the most common method where an active flame is present. Fire needs oxygen to burn well. Use this method for dishes that require high heat, such as pizza.

CLOSED DOOR COOKING

Closed door cooking is used for cooking dishes longer at lower temperatures such as baking or roasting. Closing or partially closing the oven door helps to reduce the flame and regulate temperature.

For baking let the fire die down and keep the door open 1" - 2".

This will allow the embers to continue to glow and help maintain temperature. Avoid large flames while baking or roasting. Small flames with a good bed of embers is preferred. It is also advisable to place a small container of water in the oven to maintain humidity. The container must be stainless steel, cast iron, terracotta or similar material that is suitable for the high temperatures of the oven.

TO EXTINGUISH A WOOD FIRE - CLOSE THE DOOR TIGHTLY AND ALLOW A WOOD FIRE TO BURN ITSELF OUT. AFTER THE FIRE IS COMPLETELY OUT, REMOVE THE ASH WITH A METAL SHOVEL AND PLACE IT OUTSIDE IN A FIREPROOF CONTAINER.
ALLOW THE ASH TO REMAIN THERE 2-3 DAYS BEFORE PROPERLY DISPOSING OF IT.

DO NOT REMOVE THE METAL BURNER COVER UNTIL ALL ASH HAS BEEN SWEPT OUT CLEAN.

MORE COOKING

The XOPIZZA1GAS pizza/hearth oven was designed and built in Italy to cook perfect, Italian pizza in beautiful homes like yours. The ceramic refractory hearth stone floor of the oven can reach temperatures of 750 F in as little as 15 to 20 minutes, allowing you to create authentic pizza cooked to perfection. And, the XOPIZZA1GAS is remarkably well insulated creating an oven that is dramatically more efficient.

For Neopolitan style pizza lovers, the insulated refractory floor of the oven allows cooking at temperatures up to 850 F without burning the bottom of the crust.

The generous size cooking chamber and hearth are capable of cooking a personal size pizza.

The XOPIZZA1GAS is engineered and built to perform.

CONVECTION COOKING

The curved dome of the interior oven chamber is designed to have the fire banked to the left side allowing the flames to curl up and over the cooking zone creatiing a natural convection cooking environment. Like other convection cooking systems, this results in decreased cooking times.

RADIANT COOKING

During the pre-heating process heat is stored in the refractory materials of the oven. During cooking - this heat is radiated back to the food from every direction.

CONDUCTIVE COOKING

Heat stored in the ceramic refractory floor of the oven is directly transferred to the food or dishes placed upon it. Pizza and bread are cooked directly from below sitting on the hot hearth stone. Other dishes prepared in cast iron or terracotta cookware adsorb heat and transfer it directly just as they would on a stove top.

OPTIONAL COOKING TOOLS (XOPIZZATOOL4)

XO has an optional set of tools specifically designed to assist you in cooking with your new oven. The four tool set which includes a large peel for adding or removing pizza from the oven, a small diameter peel for periodically rotating food as it cooks, a scraper for removing degris and a brush for clearing the hearth.

LEARN MORE ABOUT YOUR NEW XO PIZZA OVEN BY SCANNING THIS QR CODE

CHANGING THE BATTERY

The elecrtric spark ignition is generated by a **AA Battery** accessed at the rear of the oven.

To replace the battery - unscrew the **CAP**
Remove the old **BATTERY**
Install the new battery and
Replace the cap

A LITTLE TLC

MAINTAINING YOUR XOPIZZA4H OVEN

CLEANING THE EXTERIOR

Clean the exterior of your oven with warm soapy water and a mild non-abrasive cleaner.

Never use scrubbing pads or scrapers which can scratch and mar the finish.

CLEANING THE INTERIOR

Periodically check the chimney for obstructions and remove any ash or soot build up that may have accumulated in the flue pipe.

If used in wood-fired mode, once a fire has been completely extinguished, use a metal shovel to careully place the ashes in a metal bucket or fire-proof container. Leave this outdoors in a safe location for 2-3 days to ensure that all embers are completely extinguished. Once the ashes are completely out and cold, dispose of them properly in accordance with local regulations.

Never leave ash or burned wood in the oven where it will absorb moisture.

DO NOT REMOVE THE BURNER COVER UNTIL ALL ASH HAS BEEN REMOVED FROM THE OVEN.

Your XOPIZZA4H is a self-cleaning oven. Any cheese, toppings or spills from a pizza, roasts or other dishes will be carbonized by the high operating temperatures of the oven and are easily sweep away as ash.

When used as a wood-fired appliance, some of the hot embers can be placed directly on an area that requires cleaning and allowed to burn there for several minutes. Then sweep the fire back in place on the left side of the oven. Afterwards, sweep the hearth clean when you are done.

FAQS

QUESTION: Why does my oven produce a lot of smoke?
Check to make certain the wood is not wet or green. If you hear a hissing noise while burning - that is an indicator that the wood is not dry.
Do not burn softwood or birch with the bark on.
Make certain that you have robust flames. Smoke is a byproduct of incomplete combustion. Build up the fire with small dry wood and see if it clears.

QUESTION: Why does the top of my pizza cook but not the crust?
Preheat your oven floor longer. The chamber may be hot but the oven floor has not had enough time to come up to a proper baking temperature.
If you are using parchment paper, remove it as soon as you can move the pizza without sticking.

QUESTION: What else can I cook beside pizza?
Virtually anything you might roast or bake in a conventional oven; sausage, poultry, fish, vegetables, bread, cookies, desserts and much more. Remember because of higher temperatures most cooking times will be reduced.

QUESTION: What about tools or cooking utensils?
The three tools you will need are a large pizza peel for adding and removing food, a smaller round peel for rotating dishes while in the oven and a brush used for removing ash and manipulating the fire.
You may want additional accessories later based on your cooking preferences.

QUESTION: What kind wood should I use?
Burn dry, seasoned hardwood only, such as; oak, maple, apple, elm, beech, cherry, ash, hickory, chestnut - there are many varieties available. Remember to remove the bark from birch before burning and avoid softwoods such as pine, spruce or fir.

QUESTION: How do I clean by oven?
Refer to page 13 for instructions on cleaning the interior and exterior of your oven.

QUESTION: How long does it take to cook?
Once the oven has been properly pre-heated (650°- 750°F) it only takes about 2-3 minutes to cook pizza.
Roasting is done once the oven temperature drops to about 450°F.
Baking is done last after the oven temperature has had an opportunity to drop. This permits bread to rise without burning.
Remember to rotate dishes periodically sa the bake or roast to ensure they are cooking and browning evenly.

OPTIONAL CART ASSEMBLY

OPTIONAL XOPIZZACART1

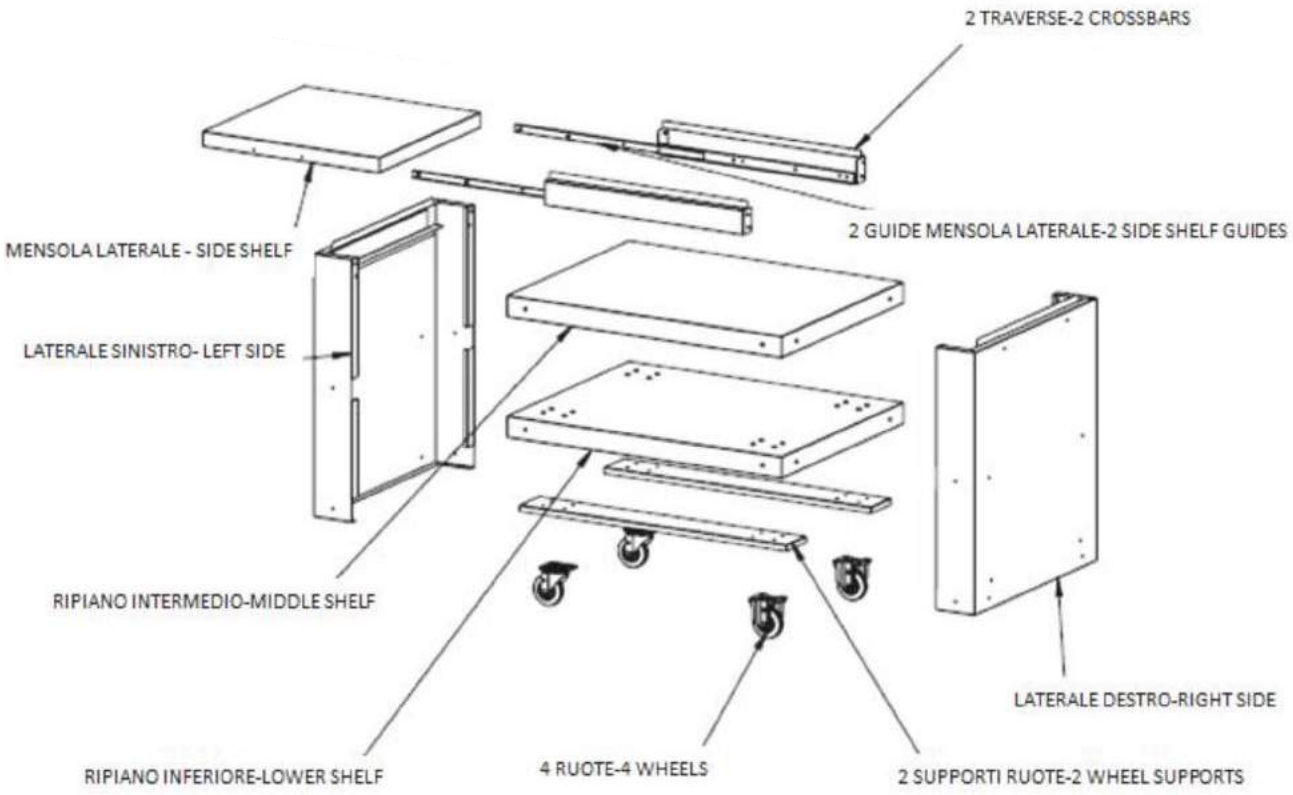

FASTENERS INCLUDED

You will need help to support the cart during assembly and team lift the oven.

(16) M6 x 15 Phillips Head Screws
(16) M6 x 18 Flat Washers
(16) M6 Hex Nuts

(26) M5 x 10 Phillips Head Screws

(4) M4 x 10 Phillips Head Counter Sunk Screws

(4) M4.2 x 15 Phillips Head Self Tapping Screws

IMPORTANT:
You will also find two (2) wheel blocks to prevent the cart from accidentally moving.

TIP **USE THE PACKING MATERIAL YOUR XOPIZZACART1 ARRIVED IN TO PAD AND CUSHION THE PARTS DURING ASSEMBLY AND PREVENT SCRATCHES TO THE FINISH!**

You Will Need:
A Phillips Head Screwdriver and an Adjustable Wrench (or a 10mm Wrench)

and Large, Strong Friends who will work for pizza to help pick the oven up...

BUILDING THE CART

Use two people to support the cart during assembly.

1. ATTACH THE FOUR (4) CASTERS TO THE BASE.

Locate the base and (2) wheel supports.

Align the bolt holes on the wheel supports with the bolt holes on the base.

Using the M6 x 15 Phillips head screws supplied, insert (4) screws in the first corner of the base, through a wheel support - then through one of the casters.

Place a flat washer onto each of the (4) screws and thread one of the M6 x 15 nuts on to hold it in place.

DO NOT TIGHTEN YET.

Repeat this for the remaining casters.

Once all (4) casters are in place - using a Phillips Head Screwdriver and 10mm or adjustable wrench, tighten all of the (16) nuts.

Check to make certain that all are tight before proceeding.

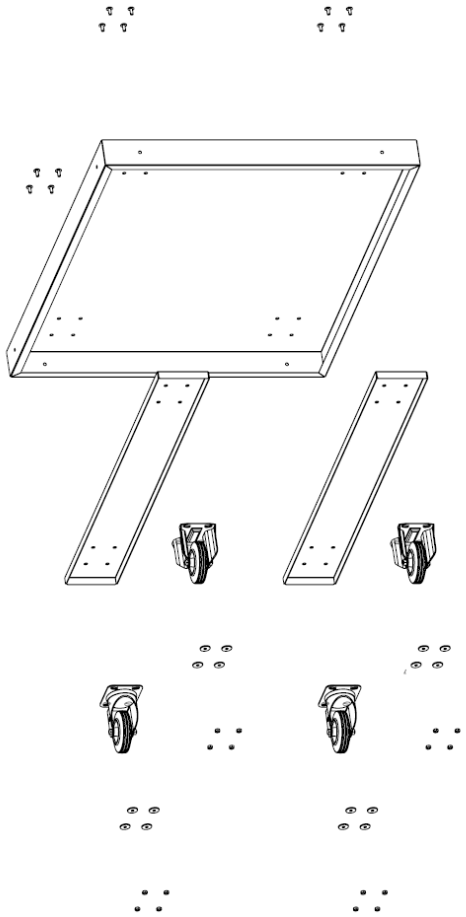

NOW SET THE WHEELED BASE RIGHT SIDE UP - READY FOR THE NEXT STEP

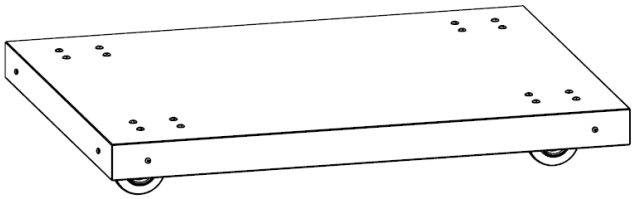

BUILDING THE CART

Use two people to support the cart during assembly.

2. ATTACH THE LEFT SIDE PANEL. (side with the sliding shelf opening)

Locate the left side panel, it has a rectangular slot for the shelf.
Being careful not to scratch the finish, align the bottom of the left side with the wheeled base.

While one person supports it, attach the side panel to the base using (4) M5 x 10 screws.

Once all (4) screws are in place - using a Phillips Head Screwdriver tighten all of the (4) screws.

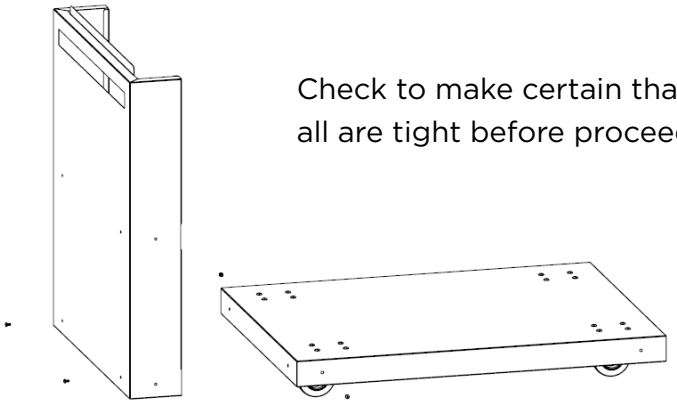

Check to make certain that screws
all are tight before proceeding.

3. ATTACH THE MIDDLE SHELF

Locate the cut outs halfway up on the left side panel.
Being careful not to scratch the finish, align the middle shelf with the cut outs and insert the middle shelf.

While one person supports it, attach the side to the middle shelf using (4) M5 x 10 screws.

Once all (4) screws are in place - using a Phillips Head Screwdriver tighten all of the (4) screws.

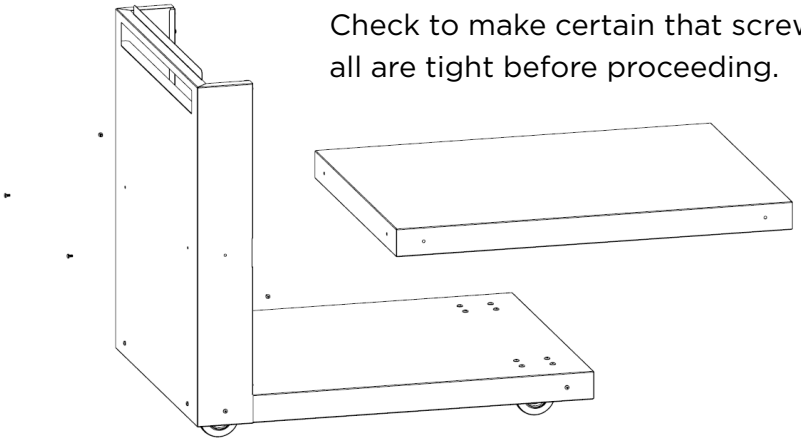

Check to make certain that screws
all are tight before proceeding.

BUILDING THE CART

Use two people to support the cart during assembly.

4. ATTACH THE RIGHT HAND SIDE

Locate the right hand side, while supporting the middle shelf to avoid scratches - align the cut outs on the right side and attach to the middle shelf and base using (8) M5 x 10 screws.

DO NOT TIGHTEN UNTIL ALL THE SCREWS ARE IN PLACE.
Make certain all the screws are tight before proceeding.

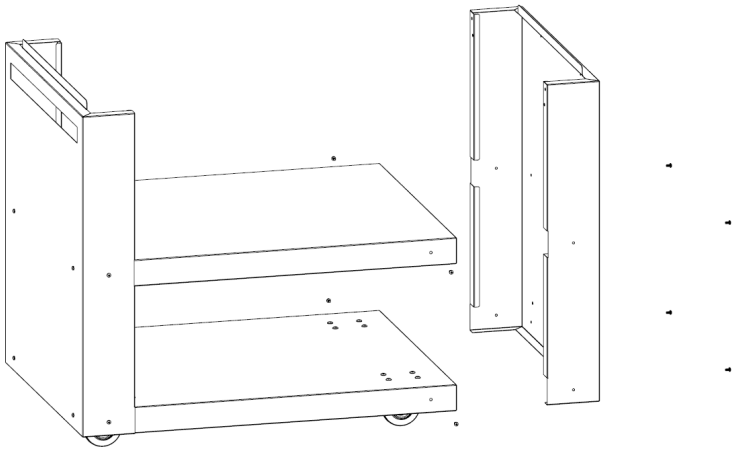

5. ATTACH THE TWO (2) TOP CROSSBARS

Locate the two top crossbars - the shelf glides are already attached.
Align one so the open end of the glide is in line with the square slot in the left side.

Bolt the crossbar in place with (4) M5 x 10 screws. Repeat with the other crossbar.

DO NOT TIGHTEN UNTIL ALL THE SCREWS ARE IN PLACE.
Make certain all the screws are tight before proceeding.

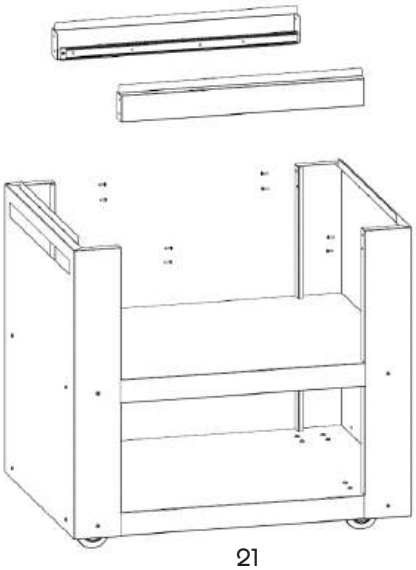

BUILDING THE CART

Use two people to support the cart during assembly.

6. INSTALL THE SLIDING SHELF

Extend the telescoping shelf supports attached to the top rails through the square slot to expose the screw holes for attachment.

Remove the protective plastic sheet from the stainless steel shelf.

Align the screw holes in the telescoping shelf supports with the holes in the side of the shelf.

Attach to the shelf to the supports using (4) M4 x 10 countersunk head screws.

DO NOT TIGHTEN UNTIL ALL THE SCREWS ARE IN PLACE.
Make certain all the screws are tight and you are ready for the oven!

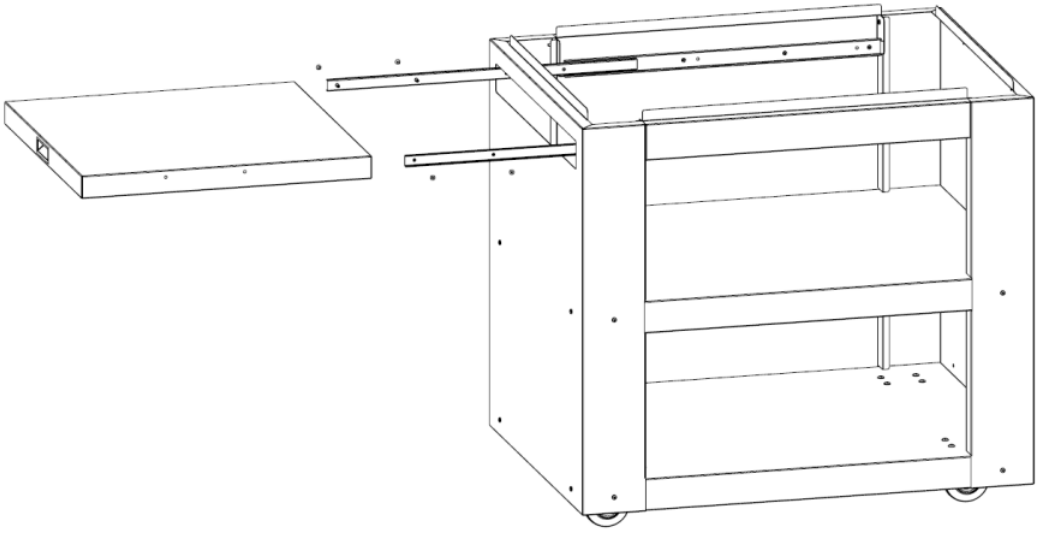

SETTING THE OVEN

THE OVEN IS VERY HEAVY! TEAM LIFT TO AVOID INJURY OR DAMAGE!

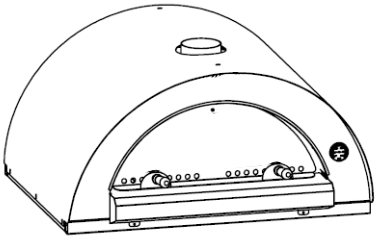

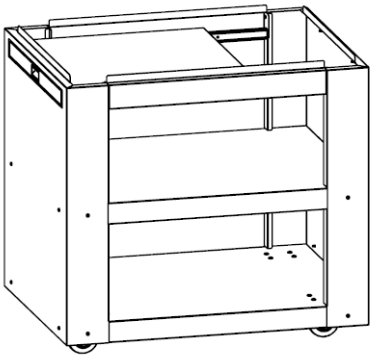

7. SETTING THE OVEN

WARNING - Be aware of pinch points and make certain you have sufficient help to lift and place the oven safely.

Remove the door and place safely out of the way before lifting.

The cart has centering tabs designed to match precisely with the oven - pay close attention to these tabs during the lift and placement.

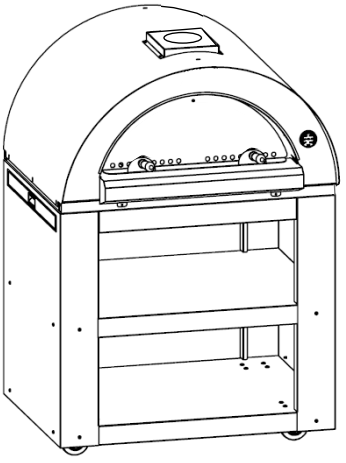

8. ATTACH THE CHIMNEY

After the oven is securely in place, fit the chimney and chimney cap to the outlet in the top of the oven.

The chimney has interlocking tabs that will hold it securely in place while allowing it to be removed if you wish.

Alternately - you may choose to attach the chimney using the (4) 4,2 x 16 self-tapping screws supplied.

SETTING THE OVEN

THE OVEN IS VERY HEAVY! TEAM LIFT TO AVOID INJURY OR DAMAGE!

9. FIT THE CHIMNEY CAP

The Chimney Cap simply slips into place - AND YOU ARE READY TO FIRE UP!

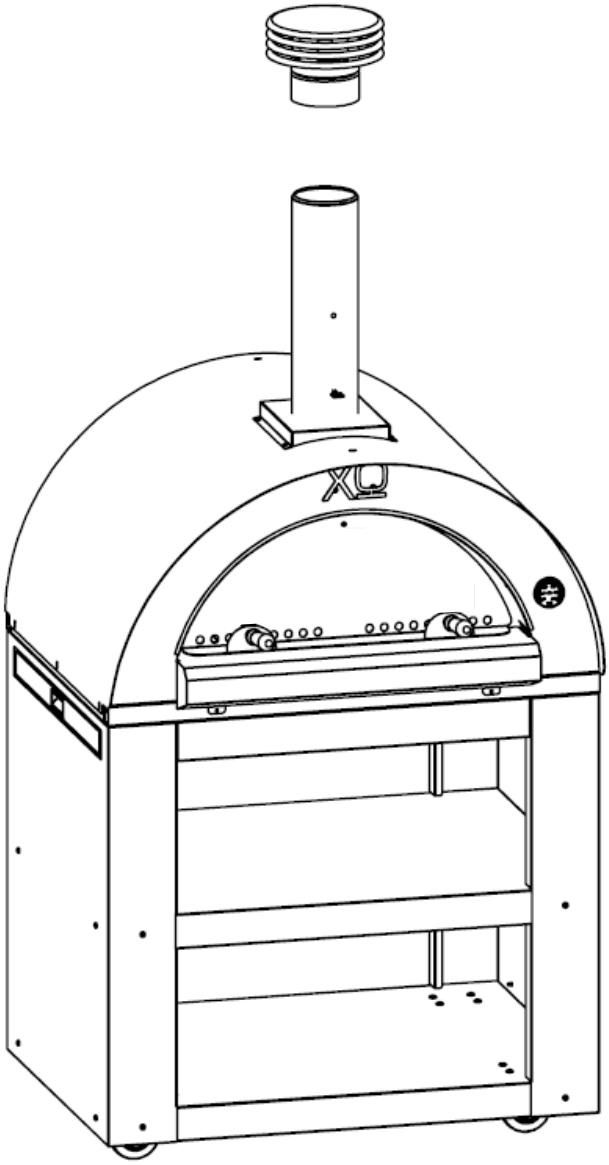

THE OPTIONAL TOOL HOLDER

The Optional Tool Holder is supplied with the XOPIZZATOOL3 Set

JUST TWO BRACKETS TO ATTACH

The convenient tool holder is designed to screw directly to your XOPIZZACART1 and keep your large peel, small peel and brush close at hand. It even has a built-in bottle opener.

The Top Bracket and Bottom Bracket each attach with two M5 x10 Phillips Head screws.

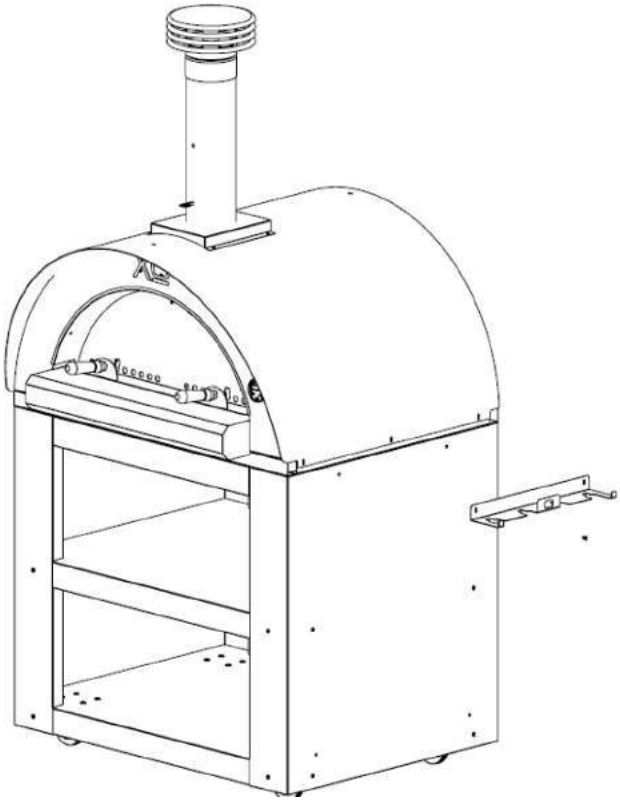

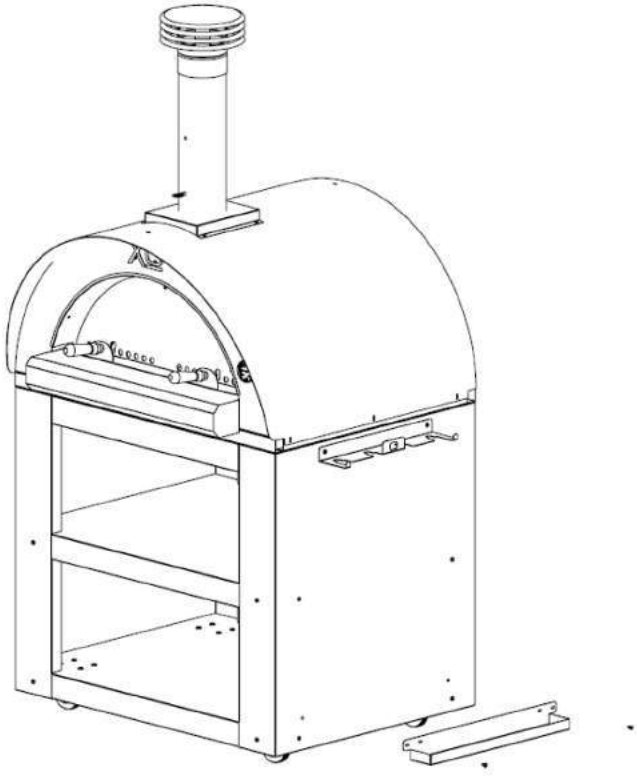

FAQS

QUESTION: Why does my oven produce a lot of smoke?
Check to make certain the wood is not wet or green. If you hear a hissing noise while burning - that is an indicator that the wood is not dry.
Do not burn softwood or birch with the bark on.
Make certain that you have robust flames. Smoke is a product of incomplete combustion, builld up the fire with small dry wood and see if it clears.

QUESTION: Why does the top of my pizza cook but not the crust?
Pre-heat your oven longer. The chamber is hot but the floor of the oven has not had enough time to heat up to temperature.
If you are using parchment paper, remove it as soon at the pizza can be moved without sticking.
Position your pizza toward the right, rear corner of the oven.

QUESTION: What can I cook besides pizza in my oven?
Virtually anything you might roast or bake in a conventional oven; sausage, poultry, fish, vegetables, bread, cookies, desserts and much more. Remember because of higher temperatures most cooking times will be reduced.

QUESTION: What about tools or cooking utensils?
The three tools you will need are a large pizza peel for adding and removing food, a smaller round peel for rotating dishes while in the oven and a brush used for removing ash and manipulating the fire. You may want additional accessories later based on your cooking preferences.

QUESTION: What kind wood should I use?
Burn dry, seasoned hardwood only, such as; oak, maple, apple, elm, beech, cherry, ash, hickory, chestnet - there are many varieties available. Remember to remove the bark from birch before burning and avoid softwoods such as pine, spruce or fir.

QUESTION: How do I clean by oven?
Refer to page 13 for instructions on cleaning the interior and exterior of your oven.

QUESTION: How long does it take to cook?
Once the oven has been properly pre-heated (650°- 750°F) it only takes about 2-3 minutes to cook a pizza.
Roasting is done once the oven temperature drops to about 450°F.
Baking is done last after the oven temperature has had an opportunity to drop. This permits bread to rise without burning.
Remember to rotate dishes periodically as they bake or roast to ensure they are cooking and browning evenly.

THE WARRANTY

2 YEAR PARTS & LABOR WARRANTY

Your XOPIZZA4 oven is covered by a 2 Year Parts and Labor Warranty. Should your oven require service either within warranty or beyond, call the number below or reach out to us on-line.

Award-Winning Luxury Appliance Service

SERVICE THAT EXCEEDS EXPECTATIONS

Even the best appliances occasionally need the attention and care of a qualified service technician. At EMC Service, we see to it that service representatives and installers have much more than just a cursory glance at a service manual. Our service and installation training, complete with manufacturer representatives working with live appliances, trains and certifies participants so that they may better fully diagnose a service issue.

Complementing their education is access to blow-up diagrams of every product as well as a fully stocked parts warehouse and repair workshop. Rush parts delivery is available We are all committed to ensuring the best experience with our products at every level.

Service Area - Direct and 3rd Party Affiliate

Eastern Marketing Service provides professional, factory trained field service and support in the Northeast / Mid-Atlantic states.

All other markets are served by our 3rd party affiliates.

This capable team has the full support from Eastern Marketing Service Team. Service Training, Parts, Tech Help Line and quick warranty payments.

CALL 973-403-8900 -or- VIST US ONLINE AT WWW.XOAPPLIANCE .COM