Operating and Installation Instructions
Internal/External Blower

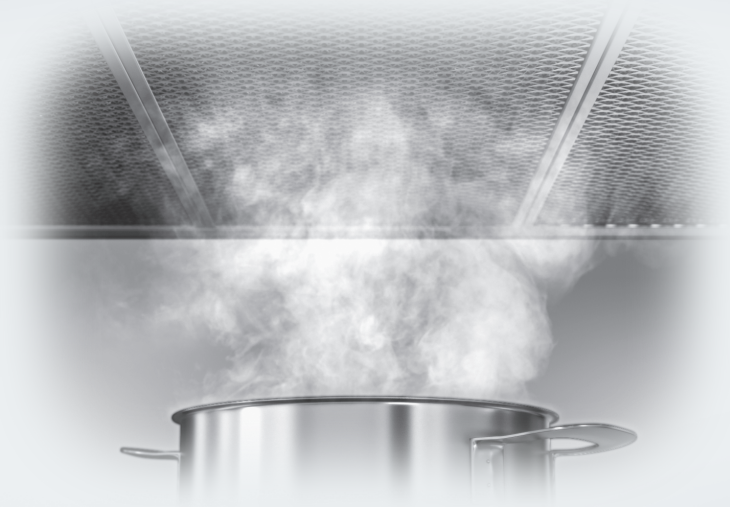

To prevent accidents and appliance damage, read these instructions **before** installation or use.

en - US, CA

M.-Nr. 09 824 330

Contents

IMPORTANT SAFETY INSTRUCTIONS 3
Functional description 5
Internal blower DRIB 5
External blower DREB 5
Appliance dimensions 6
Installation 7
Installation DRIB XL/XXL into the range hood 9
Installation DREB XL/XXL on an external wall 9
Electrical connection 9
Air extraction 10
Electrical connection 11
After Sales Service 12
Caring for the environment 13

READ AND SAVE THESE INSTRUCTIONS

Keep these operating instructions in a safe place and pass them on to any future user.

Read these Instructions carefully before installing or using the Ventilation System.

▶ This appliance is intended for residential use only. Use the appliance only for its intended purpose.

▶ This appliance complies with current safety requirements. Improper use of the appliance can lead to personal injury and material damage.

⚠CAUTION
For General Ventilating Use Only. Do Not Use To Exhaust Hazardous Or Explosive Materials And Vapors.

▶ This appliance is designed to vent cooking smoke and odors only.

▶ This appliance is not designed for maritime use or for use in mobile installations such as recreational vehicles or aircraft. However, under certain conditions installation in these applications may be possible. Please contact your Miele dealer or the Miele Technical Service Department with specific requirements.

⚠WARNING
TO REDUCE THE RISK OF FIRE, ELECTRIC SHOCK, OR INJURY TO PERSONS, OBSERVE THE FOLLOWING:

▶ a) Use this appliance only in the manner intended by the manufacturer. If you have questions, contact Miele.

▶ b) Before servicing or cleaning the appliance, switch power off at the service panel and lock the service disconnecting means to prevent power from being switched on accidentally. If the service disconnecting means cannot be locked, securely fasten a prominent warning device, such as a tag, to the service panel.

▶ c) Be certain your appliance is properly installed and grounded by a qualified technician.
To guarantee the electrical safety of this appliance, continuity must exist between the appliance and an effective grounding system. It is imperative that this basic safety requirement be met. If there is any doubt, have the electrical system of the house checked by a qualified electrician.

▶ d) Before connecting the appliance to the power supply make sure that the voltage and frequency listed on the data plate correspond with the household electrical supply.
This data must correspond to prevent appliance damage. If in doubt consult a qualified electrician.

▶ e) Installation work and repairs should only be performed by a qualified technician in accordance with all applicable codes and standards. Repairs and other work by unqualified persons could be dangerous.

▶ f) Only open the housing as described in the enclosed "Installation diagram" and in the "Cleaning and care" section of this manual. Under no circumstances should any other parts of the housing be opened. Tampering with electrical connections or components and mechanical parts is highly dangerous to the user and can cause operation faults.

▶ g) Before discarding an old appliance, disconnect it from the power supply and remove the power cord to prevent hazards.

Use

▶ Do not use a steam cleaner to clean the appliance. Steam could penetrate electrical components and cause a short circuit.

Installation

⚠WARNING
TO REDUCE THE RISK OF FIRE, ELECTRIC SHOCK, OR INJURY TO PERSONS, OBSERVE THE FOLLOWING:

▶ a) Installation work and electrical wiring must be done by qualified person(s) in accordance with all applicable codes and standards, including fire-rated construction.

▶ b) Sufficient air is needed for combustion and exhausting of gases through the flue (chimney) of fuel burning equipment to prevent back drafting. Follow the heating equipment manufacturer's guideline and safety standards such as those published by the National Fire Protection Association (NFPA) and the American Society for Heating, Refrigeration and Air Conditioning Engineers (ASHRAE), and the local code authorities.

▶ c) When cutting or drilling into the wall or ceiling, do not damage electrical wiring and other hidden utilities.

▶ d) Ducted hoods must always be vented to the outdoors.

▶ e) Any fittings, sealant, or materials used to install the ductwork must be made of approved non-flammable materials.

⚠WARNING
TO REDUCE THE RISK OF FIRE USE ONLY METAL DUCTWORK.

Internal blower DRIB

The internal blower DRIB XL should only be used in combination with Miele Range Hoods DAR 1120, 1130 or DAR 1220, 1230.

The internal blower DRIB XXL should only be used in combination with Miele Range Hoods DAR 1130, 1150 or DAR 1230, 1250.

The blower will be installed into the Range hood. Please refer to the operating and installation instructions for the range hood.

External blower DREB

The external blower DREB XL should only be used in combination with Miele Range Hoods DAR 1120, 1130 or DAR 1220, 1230.

The external blower DREB XXL should only be used in combination with Miele Range Hoods DAR 1130, 1150 or DAR 1230, 1250.

It must be mounted outside the kitchen on an external wall.

The external blower is connected to the ventilation system by an exhaust duct and connecting cable. It is operated by using the ventilation system control panel.

Appliance dimensions

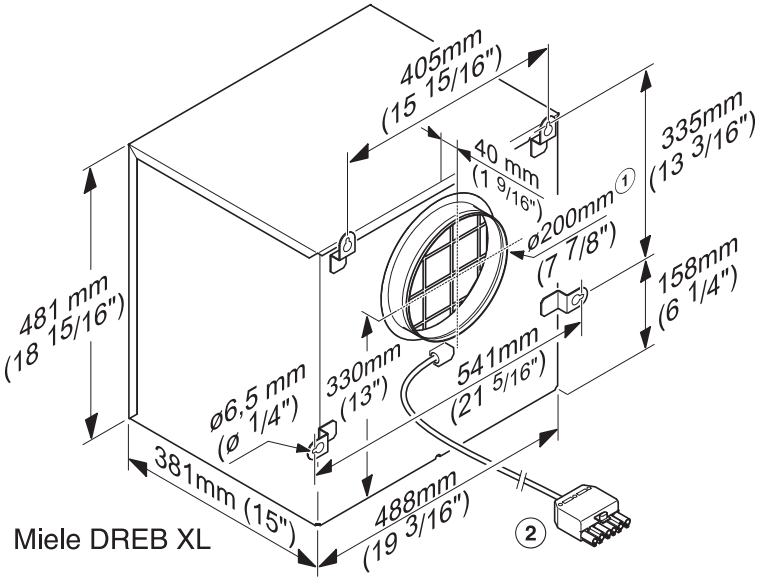

Miele DREB XL

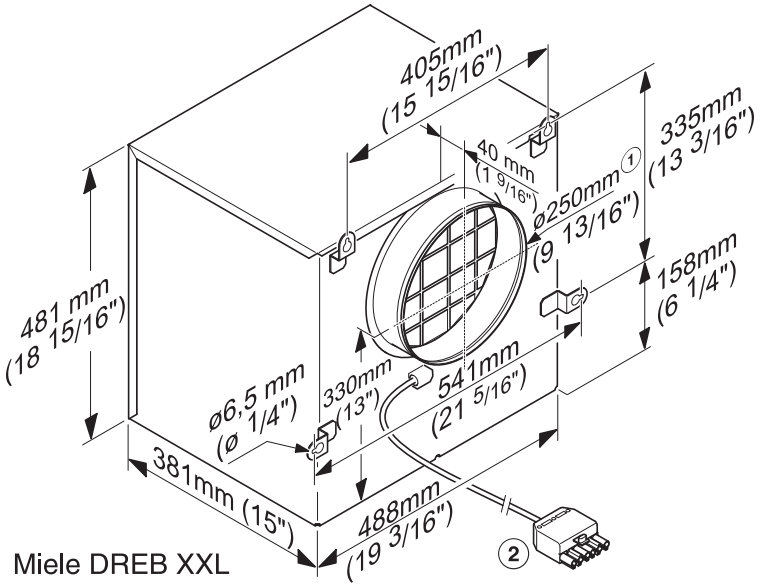

Miele DREB XXL

① Exhaust air connection

② Connecting cable to the range hood. If necessary, use the 10 ft. (3 m) extension cord supplied.

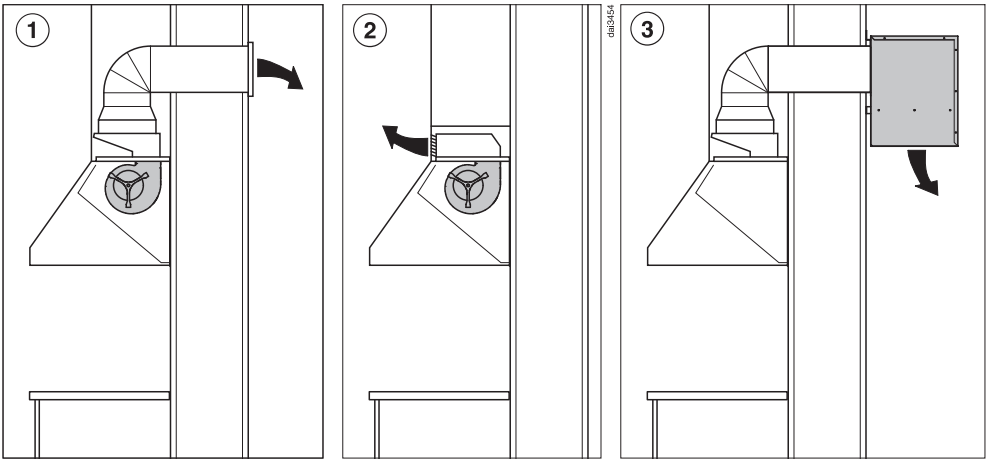

① Air extraction with internal blower DRIB XL or XXL.

② Recirculation with internal blower DRIB XL and conversion kit DRUU.

③ Air extraction with external blower DREB XL or XXL.

Installation

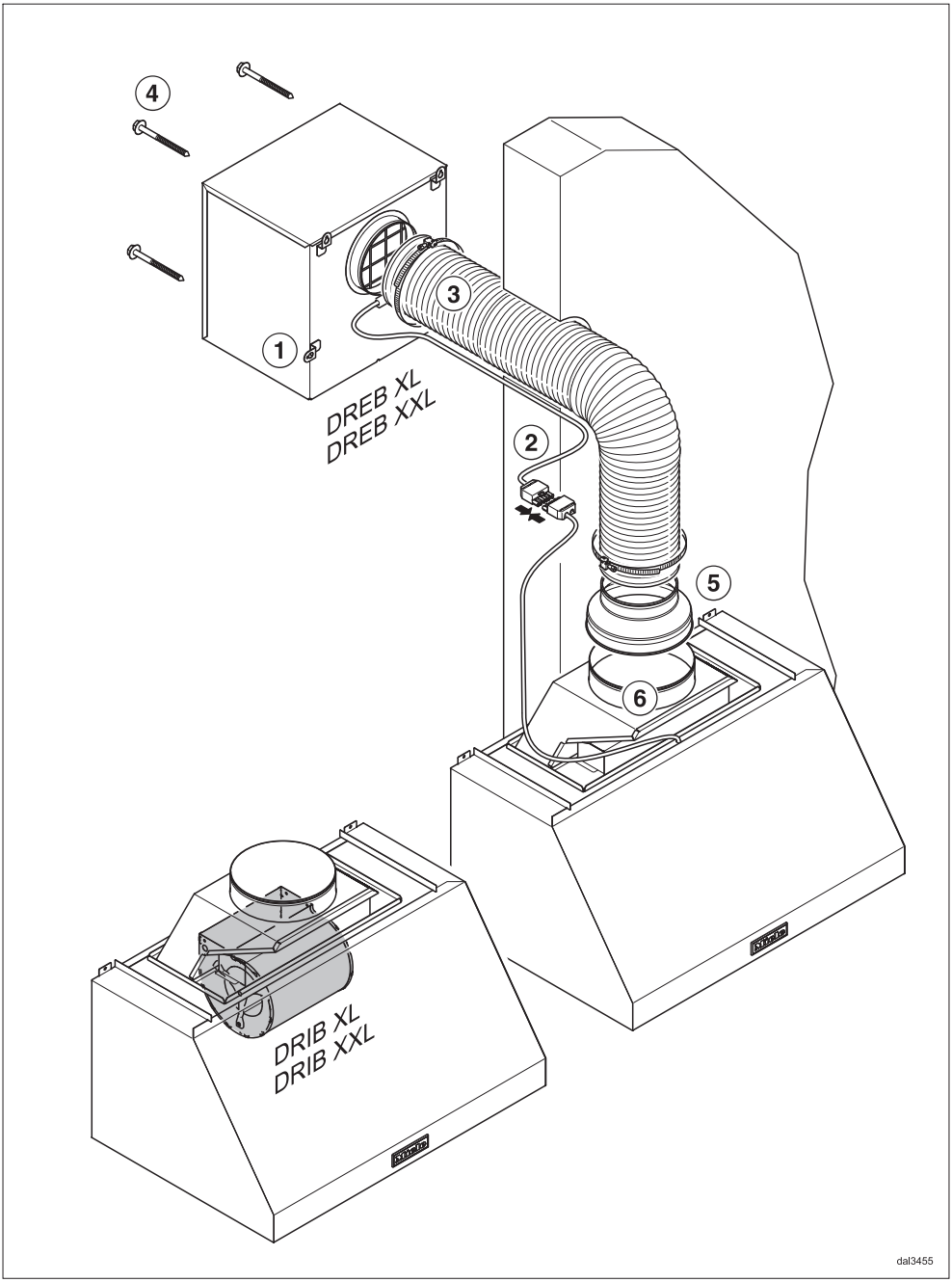

Installation DRIB XL/XXL into the range hood

- Please refer to the operating and installation instructions supplied with the range hood.

Installation DREB XL/XXL on an external wall

If unsure or unfamiliar with these installation procedures, please contact Miele.

Select a suitable installation location.

– Make sure that there are no supporting elements, electrical or piping in the wall at the selected location.

– Install the external blower with the exhaust outlet facing downwards.

- The external blower must be installed on a level surface.
  If necessary, remove the wall covering at the installation location.
- Screw the fixing brackets ① on the backside of the the blower housing.
- Make an hole for the exhaust duct and the connecting cable.
  The external blower DREB XL and the range hood are connected by a 8" (203 mm) exhaust duct Ø , the external blower DREB XXL by a 10" (254 mm) exhaust duct Ø (see "Air extraction").
- Feed the connecting cable ② with the six-pole connectors through the wall into the house.
- Feed the exhaust duct ③ through the wall and secure it to the motor unit fixing bracket with a hose clip.
- Apply a sealant along the outside edge on the rear wall of the blower housing.
- Mount the external blower on the external wall using four screws ④.
- Seal the screw heads.
- The ducting is then connected to the cooker hood.
  If using 8" (203 mm) ducting Ø, insert the reducing collar ⑤ supplied into the exhaust connection, and secure the exhaust ducting to the reducing collar with a hose clip. (See "Connection for air extraction").
- Place the exhaust ducting on the blower connection ⑥ for the ventilation hood.
- See "Air Extraction" for additional instructions on installation the ducting.

Electrical connection

See “Electrical connection” and “Important Safety Iinstructions” before connecting to the electrical supply.

Air extraction

⚠ WARNING

Danger of toxic fumes.

Gas cooking appliances release carbon monoxide that can be harmful or fatal if inhaled.
To reduce the risk of fire and to properly exhaust air, the exhaust gases extracted by the hood should be vented outside of the building only.

Do not vent exhaust air into spaces within walls or ceilings or in attics, crawl spaces or garages.

To reduce the risk of fire, only use metal ductwork.

Please read and follow the **"IMPORTANT SAFETY INSTRUCTIONS"** to reduce the risk of personal injury. Follow all local building codes when installing the hood.

Exhaust ducting and connections

- The ducting should be as short and straight as possible, and the number of sharp bends should be minimized.
- For most efficient air extraction, the diameter of the ductwork should not be less than 8" (203 mm) for DRIB/DREB XL and 10" (254 mm) for DRIB/DREB XXL. Use of flat ducts also reduces the air extraction efficiency.
- Noise levels of the hood will increase if flat ducts or round ducts of less than than 8" (203 mm) for DRIB/DREB XL and 10" (254 mm) for DRIB/DREB XXL in diameter are used.
- Use smooth or flexible pipes made from approved non-flammable materials for exhaust ducting.
- Where the ductwork is horizontal, it must slope away from the hood at least $^1/_8$" per foot (1 cm per meter) to prevent condensation dripping into the appliance.

Important

If the ductwork runs through rooms, ceilings, garages, etc. where temperature variations exist, it may need to be insulated to reduce condensation.

⚠WARNING
TO REDUCE THE RISK OF FIRE, ELECTRIC SHOCK, OR INJURY TO PERSONS, OBSERVE THE FOLLOWING:

All electrical work should be performed by a qualified electrician in strict accordance with national regulations (for USA: ANSI-NFPA 70) and local safety regulations. Installation, repairs and other work by unqualified persons could be dangerous.
Ensure that power to the appliance is off while installation or repair work is performed.

The blowers DRIB/DREB XL may only be operated with Miele DAR 1120, 1130, or DAR 1220, 1230 Range hoods.
The blowers DRIB/DREB XXL may only be operated with Miele DAR 1130, 1150, or DAR 1230, 1250 Range hoods.

- Verify that the voltage, load and circuit rating information found on the data plate, match the household electrical supply before installing the blower.

If there is any question concerning the electrical connection of this appliance to your power supply, please consult a licensed electrician or contact Miele's Technical Service Department. See back cover for contact information.

WARNING:
THIS APPLIANCE MUST BE GROUNDED

Important: To increase security before the machine is installed, it is recommended to install a protective switch (30 mA).

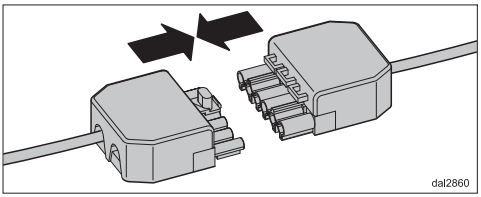

- Connect the blower to the cooker hood using the connecting cable and the 6-pole plug connector.
- Use the extension cable supplied to lengthen the cabling if necessary.

Maximum load
DRIB, DREB XL . . . . . 615 W
DRIB, DREB XXL . . . . . 800 W
Voltage . . . . . 120 V

Frequency . . . . . 60 Hz

Circuit Rating . . . . . 15 A

After Sales Service

Repairs

In the event of a fault which you cannot easily fix yourself, please contact the Miele Technical Service Department.

- When contacting the Technical Service Department, please have the model and serial number of your appliance available.

These can be found on the data plate.

Disposal of packing material

The cardboard box and packing materials protect the appliance during shipping. They have been designed to be biodegradable and recyclable. Please recycle.

⚠ DANGER
Ensure that any plastic wrappings, bags, etc., are disposed of safely and kept out of the reach of babies and young children. Danger of suffocation!

Disposal of an old appliance

Old appliances may contain materials that can be recycled. Please contact your local recycling center about the possibility of recycling these materials.

Before discarding an old appliance, disconnect it from the electrical supply and cut off the power cord to prevent it from becoming a hazard.

Please have the model and serial number of your appliance available before contacting Technical Service.

U.S.A.

Miele, Inc.

National Headquarters
9 Independence Way
Princeton, NJ 08540
Phone: 800-843-7231
609-419-9898
Fax: 609-419-4298
www.mieleusa.com

Technical Service & Support Nationwide
Phone: 800-999-1360
Fax: 888-586-8056

TechnicalService@mieleusa.com

Canada

Miele Limited

Headquarters and Showroom
161 Four Valley Drive
Vaughan, ON L4K 4V8
Phone: 800-643-5381
905-660-9936
Fax: 905-532-2290
www.miele.ca
professional@miele.ca
(commercial enquiries)

MieleCare National Service
Phone: 800-565-6435
905-532-2272
Fax: 905-532-2292
customercare@miele.ca
(general and technical enquries)

Germany
Miele & Cie. KG
Carl-Miele-Straße 29
33332 Gütersloh

Miele

DRIB XL, DRIB XXL
DREB XL, DREB XXL

en - US, CA

M.-Nr. 09 824 330 / 01