HOME SOLUTIONS - DISHWASHERS

LDNPH654S

FlushFit™ Top Control Dishwasher with 1-Hour Wash & Dry Cycle

KEY FEATURES

- FlushFit™ Design
- 1-Hour Wash & Dry Cycle
- QuadWash® Pro
- Dynamic Heat Dry™ with AutoVent Dry™
- TrueSteam®
- ThinQ® Auto Leak Detection
- Floor Status Indicator
- Pocket Handle Design
- LoDecibel™ Operation (44dB)

AVAILABLE COLORS

PRINTPROOF™ STAINLESS STEEL

ENERGY STAR



SMART APPLIANCE

ThinQ Care

Proactive Smart Alerts to Keep Your Appliances Running Smoothly

- Preventative Alerts help you stay a step ahead of potential issues to find proactive solutions before problems arise.
- Avoid preventable repairs and service calls with real-time diagnostics for a hassle-free experience.
- Integrated within LG's ThinQ app—a smart home hub for managing your smart devices and appliances.

PRODUCT FEATURES

CAPACITY	
Total Place Settings	16
Upper Rack Dish Height Limit	7.1"
Lower Rack Dish Height Limit	12.5"
RACKS AND BASKETS	
Cutlery Baskets	Yes
Fold Down Tines	Upper: 3/4 Foldable Lower: Half Smart FD & Half Normal FD
BPA-Free Nylon Coated Racks and Tines	Yes
Height Adjustable	Easy One Touch (3 Levels)
Rack Handle	Yes
Rack Color (Handle)	Dark Grey
Rack Color (Tine)	Dark Grey
Cup Rack	Yes
Cup Rack Color	Cup rack (Dark Gray) Rubber (Noble Gray)
Gliding Type	Upper: Normal Rail Lower: Normal Wheel 3rd Rack: Normal Rail
STYLE AND DESIGN	
Control Panel Location	Top Control
Control Panel Material	ABS
Touch Control	Yes
Tub Material	Stainless Steel
Handle	Pocket Handle
All Available Colors	Print Proof Stainless Steel
Status Indicators	Mood Light
Remaining Time indicator	LED
FEATURES	
Steam	True Steam™
Lower Wash Arm	QuadWash Pro™
QuadWash™ Pro	Yes
Quad Arm Body Color	Pearl Dark Grey
Quad Arm Nozzle Color	Orange
Spray Arm	Yes
Number of Spray Arms	3 (Top, Upper, Lower)
SenseClean™ Wash System	Yes
Vario Wash	Yes
Detergent and Rinse-Aid Dispenser	Yes

Drying System	Dynamic Heat Dry with AOD
Number of Wash Cycles	5 (Auto, Heavy, Normal, 1-Hour, Download Cycle)
Number of Options	6 (Steam, High Temp, Dry Boost, AOD, Delay Start - Up to 12hrs, Remote)
End of Cycle Indicator	Yes (Beeper + END indication on display)
Hidden Water Heater	Yes
Safety Float Switch (Leaks)	Yes
Soil (Turbidity) Sensor	Yes
DirectDrive Motor™	Yes
LoDecibel™ Quiet Operation	44 dBA
Tub Insulation	Yes (Damping Sheet, Sound Absorbing Material (felt), Base
Anti-Bacterial Treatment (Drain hose)	Yes
Balanced Door	Yes
ThinQ® SMART FEATURES	
Wi-Fi Enabled	Yes
ThinQ Care	Yes
SmartDiagnosis™	Yes
POWER RATINGS	
ENERGY STAR® Qualified	Yes
Energy Use (kWh/Year)	220 kWh/Year
Water Use (Gallons/Cycle)	2.9
DIMENSIONS / CLEARANCES / WEIGHT	
Product Dimensions (in) (W x H x D)	23 3/4" x 33 5/8" x 23 3/4"
Product Weight (Unit)	83.8 lbs
Product Weight (Carton)	97 lbs
Depth with Door Closed with Handle (in)	23 3/4"
Depth with Door Open (in)	48 1/2"
Clearances (WxDxH)	24" x 24" x 33 5/8"
Carton Dimensions (in) (W x H x D)	28 1/32" x 29 1/4" x 34 7/8"
LIMITED WARRANTY	
Labor & Parts	1 Year
Control Board and Rack Parts	Control Board and Rack Parts 2 Years Stainless Tub and Door Liner 2 Years
Direct Drive Motor	10 Years
UPC CODES	
LDNPH654S (Print Proof Stainless Steel)	048231348201

© 2025 LG Electronics USA, Inc. All rights reserved. "LG Life's Good" is a registered trademark of LG Corp. All other product and brand names are trademarks or registered trademarks of their respective owners. Design, features and specifications are subject to change without notice. Non-metric weights and measurements are approximate. Some features may require Internet access. Content and services may vary by product and are subject to change without notice. 1/12/26

LDNPH654_

DIMENSION / CLEARANCES

Back View

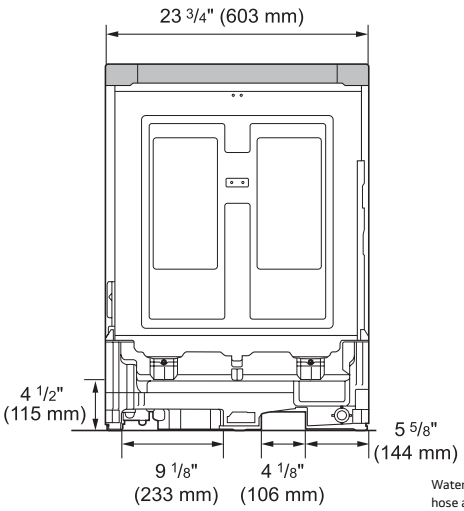

Side View

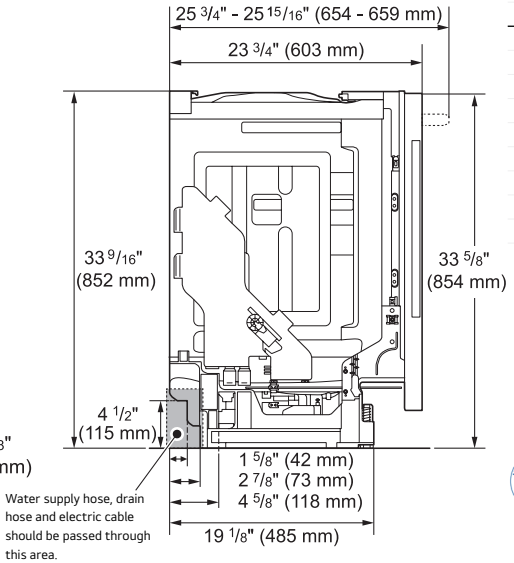

DIMENSIONS / CLEARANCES / WEIGHT	
Product Dimensions (in) (W x H x D)	23 3/4" x 33 5/8"x 23 3/4"
Product Weight (Unit)	83.8 lbs
Product Weight (Carton)	97 lbs
Depth with Door Closed with Handle (in)	23 3/4"
Depth with Door Open (in)	48 1/2"
Clearances (WxDxH)	24" x 24" x 33 5/8"
Minimum Height	33 5/8"
Maximum Height	36"
Carton Dimensions (in) (W x H x D)	28 1/32" x 29 1/4" x 34 7/8"

* LG dishwashers are NSF certified when operated on the High Temp Cycle. Certification to NSF / ANSI Standard 184 for residential dishwashers.

DIMENSION / CLEARANCES

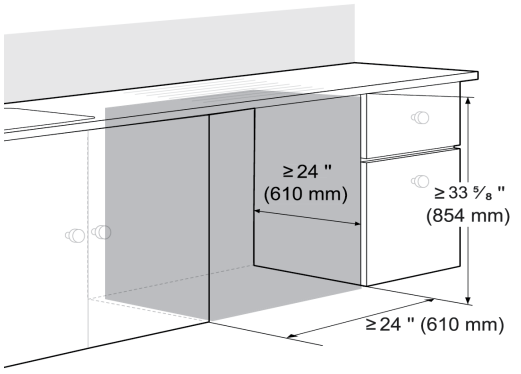

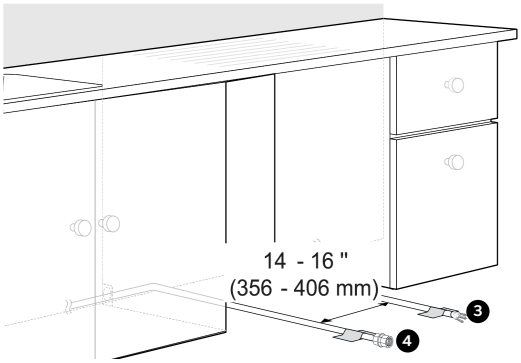

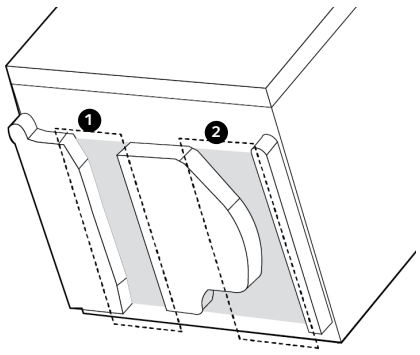

1 4 Water Supply Line

2 3 Elctrical Cable

INSTALLATION NOTES

• This dishwasher is designed to fit a standard dishwasher opening. An opening may be needed on both sides to route plumbing and electrical connections.

• Select a location as close to the sink as possible for easy connections to water supply line, drain hose and electrical connection.

• To ensure proper drainage, install the dishwasher no more than 12 ft. (3.65 m) from the sink.

• The location must have sufficient space for the dishwasher door to open easily and provide at least 0.1" (2 mm) between the dishwasher and the cabinet sides.

• If installing the dishwasher in a corner, leave a minimum of 2" (50 mm) between the dishwasher and the adjacent wall.
The adjacent wall must be free of obstructions.

• To allow for proper clearance of plumbing and electrical, use the template included with the literature to determine the clearance on the side of the cabinet where the cabinet meets the back wall. Using a 2 1/2" diameter hole saw, drill a hole in the target area as shown on the template.

• If an extension drain hose is required, use a 5/8" or 7/8" inside diameter, 2–3 ft. length hose and a coupler for connecting the two hose ends.

• For flush installations only, you may remove the cabinet brace inside the cabinet.

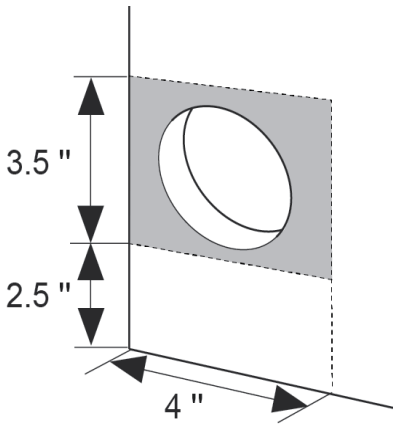

© 2025 LG Electronics USA, Inc. All rights reserved. "LG Life's Good" is a registered trademark of LG Corp. All other product and brand names are trademarks or registered trademarks of their respective owners. Design, features and specifications are subject to change without notice. Non-metric weights and measurements are approximate. Some features may require Internet access. Content and services may vary by product and are subject to change without notice. 1/12/26