Scan to see the online manual.

OWNER'S MANUAL

DISHWASHER

Read this owner's manual thoroughly before operating the appliance and keep it handy for reference at all times.

ENGLISH

LDNPH654*, LDNPM654*

MFL71917430
Rev.00_010926

www.lg.com

Copyright © 2026 LG Electronics. All Rights Reserved

TABLE OF CONTENTS

3 IMPORTANT SAFETY INSTRUCTIONS

3 READ ALL INSTRUCTIONS BEFORE USE
3 WARNING STATEMENTS
6 CAUTION STATEMENTS

8 PRODUCT OVERVIEW

8 Product Features

11 INSTALLATION

11 Before Installing
13 Preparing Cabinet Opening
14 Preparing Water and Electrical Connections
15 Preparing Dishwasher
16 Attaching Installation Brackets
17 Sliding Dishwasher into Cabinet Opening
18 Connecting Water Supply Line and Power
20 Connecting the Drain Hose
22 Leveling Dishwasher
23 Securing Dishwasher in Cabinet Opening
24 Final Installation Check

26 OPERATION

26 Before Using
28 Control Panel
29 Wash Cycles
30 Options and Extra Functions
33 Loading the Dishwasher
33 Loading the Silverware Basket
34 Loading the Lower Rack
35 Loading the Upper Rack
39 Loading the Cutlery Rack
40 Adding Cleaning Products

43 SMART FUNCTIONS

43 LG ThinQ Application
46 Smart Diagnosis™ Function

47 MAINTENANCE

47 Cleaning and Care

51 TROUBLESHOOTING

51 Before Calling for Service

59 LIMITED WARRANTY

59 USA
63 CANADA

IMPORTANT SAFETY INSTRUCTIONS

READ ALL INSTRUCTIONS BEFORE USE

Safety Messages

Your safety and the safety of others are very important.

We have provided many important safety messages in this manual and on your appliance. Always read and follow all safety messages.

This is the safety alert symbol.

This symbol alerts you to potential hazards that can kill or injure you and others. All safety messages will follow the safety alert symbol and either the word WARNING or CAUTION.

These words mean:

WARNING

You may be killed or seriously injured if you do not follow instructions.

CAUTION

You may be injured or cause damage to the product if you do not follow instructions.

All safety messages will tell you what the potential hazard is, tell you how to reduce the chance of injury, and tell you what may happen if the instructions are not followed.

WARNING STATEMENTS

WARNING

- To reduce the risk of explosion, fire, death, electric shock, scalding or injury to persons when using this product, follow basic precautions, including the following:

Installation

- Connect to a properly rated, protected, and sized power circuit to avoid electrical overload.
- To reduce the risk of severe injury or death, follow all installation instructions.
- The appliance must be installed and electrically grounded by qualified service personnel in accordance with local codes.
- Disconnect the power supply line, house fuse or circuit breaker before installing or servicing the appliance.
- When moving or installing the product in a different location, call qualified service personnel for installation and service.
- Keep packing materials out of the reach of children. Packaging material can be dangerous for children. There is a risk of suffocation.
- Moving or installation of the appliance requires two or more people.
- This appliance is not designed for maritime use or for mobile installations such as in RVs, trailers, or aircraft.
- Store and install the appliance where it will not be exposed to temperatures below freezing or exposed to outdoor weather conditions.
- This appliance must be positioned near to an electrical power supply.
- Do not, under any circumstances, cut or remove the ground from the power supply line.

- When installing or moving the appliance, be careful not to pinch, crush, or damage the power supply line.
- Do not install the appliance in humid spaces.
- Destroy the carton, plastic bag, and other packing materials after the appliance is unpacked. Children might use them for play. Cartons covered with rugs, bedspreads, or plastic sheets can become airtight chambers.
- Never attempt to operate this appliance if it is damaged, malfunctioning, partially disassembled, or has missing or broken parts, including a damaged power supply line.
- Adhere to all industry recommended safety procedures including the use of long-sleeved gloves and safety glasses.
- The installer must ensure that the dishwasher is completely enclosed at the time of installation.
- Use new hoses when connecting the appliance to the water supply. Do not reuse old hoses.
- After installing, check the hose connection for leaks.
- Do not damage or place heavy items on the power supply line of the appliance.

Operation

- Repair or immediately replace all power supply lines that have become frayed or otherwise damaged. Do not use a power supply line that shows cracks or abrasion damage along its length or at either end.
- If you detect a strange sound, a chemical or burning smell, or smoke coming from the appliance, unplug it immediately, and contact an LG Electronics customer information center.
- Never unplug the appliance by pulling on the power supply line.
- Do not use an extension cable or adapter with this appliance.
- Do not grasp the power supply line or touch the appliance controls with wet hands.
- Do not modify or extend the power cable.
- If the product has been submerged, contact an LG Electronics customer information center for instructions before resuming use.
- Do not store or use gasoline or other flammable vapors and liquids in the vicinity of this or any other appliance.
- Keep the area underneath and around your appliances free of combustible materials (lint, paper, rags, etc.), gasoline, chemicals and other flammable vapors and liquids.
- This appliance is not intended for use by persons (including children) with reduced physical, sensory or mental capabilities, or lack of experience and knowledge, unless they have been given supervision or instruction concerning the use of the appliance by a person responsible for their safety.
- If the electrical supply line is damaged, it must only be replaced by the manufacturer or its service agent or a similar qualified person in order to avoid a hazard.
- Do not abuse, sit on, or stand on the door of the appliance.
- Read all instructions before using the appliance and save these instructions.
- Use this appliance only for its intended purpose.
- Do not allow children to play on, in or with the appliance. Close supervision of children is necessary when the appliance is used near children.
- Do not tamper with controls.
- In the event of a gas leak (propane gas, LP gas, etc.) do not operate this or any other appliance. Open a window or door to ventilate the area immediately.
- Under certain conditions, hydrogen gas may be produced in a hot-water system that has not been used for two weeks or more. HYDROGEN GAS IS EXPLOSIVE. If the hot-water system has not been used for such a period, before using the appliance turn on all hot water faucets and let the water flow from each for several minutes. This will release any accumulated hydrogen gas. As the gas is flammable, do not smoke or use an open flame during this time.

- Fix the drain hose securely in place.
- Use only detergents or wetting agents recommended for use in a dishwasher and keep them out of the reach of children.
- Do not let children eat detergent or dishwasher rinse agent.
- When loading items to be washed:
  - Locate sharp items so that they are not likely to damage the door seal.
  - Load sharp knives with the handles up to reduce the risk of cuts or other injuries.
- Do not wash plastic items unless they are marked "dishwasher safe" or the equivalent. For plastic items not so marked, check the manufacturer’s recommendations.
- Do not touch the HEATING ELEMENT during or immediately after use.
- Do not operate your dishwasher unless all ENCLOSURE panels are properly in place.
- Do not abuse, sit on, or stand on the door or dish rack of the dishwasher.
- Do not install or store the dishwasher where it will be exposed to weather conditions.
- After cleaning the dishes, turn off the water supply. Before cleaning, turn the water supply back on and check the connections.
- Do not open the appliance door while it is operating. For safety reasons, the drain pump operates if the door is opened, resulting in a longer cycle time.
- Be careful not to catch your hand when closing the door of the product.
- Do not plug the dishwasher into a damaged outlet.
- Do not install or keep the dishwasher near electrical components or exposed flames.
- Do not wash dishes exposed to gasoline, solvents or other flammable materials.
- When cleaning, do not spray water on the product directly.
- Do not press buttons with a sharp object such as an awl or pin.
- Do not use solvent-based detergent.
- Do not come into contact with the steam outlet.
- Small parts, such as rack clips and filter retaining posts can be a choke hazard to small children if removed from the dishwasher. Keep out of reach of small children.
- Do not touch the heat dry blower during operation, as it is hot.
- Do not touch the inside of the product or the door-opening mechanism while this function is in operation.

Maintenance

- Do not repair or replace any part of the appliance. All repairs and servicing must be performed by qualified service personnel unless specifically recommended in this Owner’s Manual. Use only authorized factory parts.
- Do not disassemble or repair the appliance by yourself.
- Remove any dust or foreign matter from the power supply line.
- Disconnect this appliance from the power supply before cleaning and attempting any user maintenance. Turning the controls to the OFF position does not disconnect this appliance from the power supply.
- Remove the door before the appliance is removed from service or discarded to avoid the danger of children or small animals getting trapped inside.
- Unplug the appliance before cleaning to avoid the risk of electric shock.
- Before discarding the appliance, cut off the power supply line and destroy the appliance's control panel.

Grounding Instructions

- For a permanently connected dishwasher: This appliance must be connected to a grounded metal, permanent wiring system, or an equipment-grounding conductor must be run with the circuit conductors and connected to the equipment-grounding terminal or lead to the appliance.
- Connect the ground wire to the green ground connector in the terminal box.
- For a cord connected dishwasher: This appliance must be grounded. In the event of a malfunction or breakdown, grounding will reduce the risk of electric shock by providing a path of least resistance for electric current.
- This appliance is equipped with a cord having an equipment-grounding conductor and a grounding plug.
- The plug must be plugged into an appropriate outlet that is installed and grounded in accordance with all local codes and ordinances.

WARNING
Improper connection of the equipment-grounding conductor can result in a risk of electric shock. Check with a qualified electrician or service representative if you are in doubt whether the appliance is properly grounded. Do not modify the plug provided with the appliance, if it will not fit the outlet, have a proper outlet installed by a qualified electrician.

Tip Over Hazard

- Do not use the dishwasher until completely installed.
- Do not push down on the open dishwasher door.
- Failure to follow these instructions may result in serious injury or cuts.

CAUTION STATEMENTS

⚠ CAUTION

- To reduce the risk of minor or moderate injury to persons, malfunction, or damage to the product or property when using this product, follow basic precautions, including the following:

Installation

- Install the product on a firm and level floor.
- This dishwasher must be connected to a hot water supply with a temperature range between 120 °F (49 °C) and 149 °F (65 °C). This temperature range provides the best washing results and shortest cycle time. The temperature should not exceed 149°F (65 °C) to prevent damage to dishes.
- Do not put the drain hose under the dishwasher during installation.
- Do not turn the dishwasher upside down. Doing so can damage the product.
- Follow these instructions

  a) The power-supply receptacle for the appliance must be installed in a cabinet or on a wall adjacent to the undercounter space in which the appliance is to be installed;

  b) There must be an opening through the partition between the compartments specified in (a) that is large enough for the attachment plug to pass through. The longest dimension of the opening must not be more than 1 1/2” (38.1 mm);

  c) The edges of the opening specified in (b) must, if the partition is wood, be smooth and rounded, or, if the partition is metal, be covered with an edge protector; and

  d) Care must be exercised, when the appliance is installed or removed, to reduce the likelihood of damage to the power-supply cord.

- If the power supply cord, water supply hose, or drain hose is passed through an opening in a metal cabinet, the edges of the opening must be covered by an edge protector to avoid risk of electric shock, leaking, or fire. 1 1/2" (38.1 mm) plastic or rubber wire grommets can be purchased online or at a local hardware store for this purpose. For further details, call an LG Electronics Customer Information Center at 1-800-243-0000 (U.S.A.) or 1-888-542-2623 (Canada).

Operation

- Do not place objects on top of the appliance.
- Turn off the water faucets and unplug the appliance if the appliance is to be left for an extended period of time, such as during vacations.
- Do not store or spill liquid detergents, cleaners, or bleaches (chlorine bleach, oxygen bleach) on the appliance. Doing so may result in corrosion, discoloration or damage to the surface of the appliance.
- Do not touch draining water which may be hot.
- If the drain hose and the water supply hose are frozen in winter, defrost before using the appliance.
- Do not put hands, feet, or metal objects below or behind the appliance.
- Do not put the drain hose under the dishwasher during installation.

Maintenance

- If cooking oil is spilled on the exterior of the product, wipe it off immediately. Do not clean the exterior of the product with cleaners which contain alcohol, thinners, bleach, benzene, flammable liquids, or abrasives. These substances may discolor or damage the appliance.
- Aromatic hydrocarbons such as benzene can damage the surface of the product. These compounds are found in many common household products such as detergents, paints, cosmetics, air fresheners, disinfectants, and even some foods such as oils, spices, and smoked meat or fish. Regularly wipe down the control panel and other outside surfaces of the product with a clean, damp cloth to help prevent damage.

SAVE THESE INSTRUCTIONS

PRODUCT OVERVIEW

Product Features

The images in this guide may be different from the actual components and accessories, which are subject to change by the manufacturer without prior notice for product improvement purposes.

NOTE

- For your safety and for extended product life, use only authorized components. The manufacturer is not responsible for product malfunction or accidents caused by the use of separately purchased unauthorized components or parts.
- Do not remove the safety cover at any time.
- To ensure reliability, each LG dishwasher goes through thorough quality control before it leaves the factory.
- You may find water droplets or water spots from this process inside your new dishwasher.

Front View

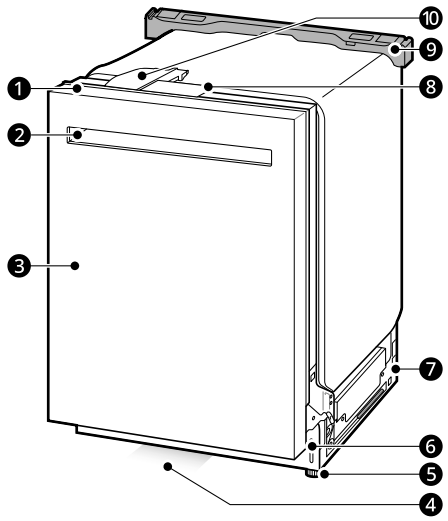

❶ Control Panel

❷ Door Handle

❸ Front Cover

❹ Status Indicator Light

❺ Leveling Feet

❻ Lower Cover

❼ Base

❽ Safety Cover

❾ Shipping Brace

❿ Auto Open Dry

Status Indicator Light

The Status Indicator light at the bottom of the dishwasher shows the status of the appliance: whether it has encountered any problems, whether it is operating normally, or whether it is ready to wash dishes.

White LED

- Pulses when the cycle is running
- Remains on when the cycle is finished.
- Turns off when the door is opened.

Red LED

- Flashes if the appliance encounters an error. For more information about error codes, see the **TROUBLESHOOTING** section.

Interior View

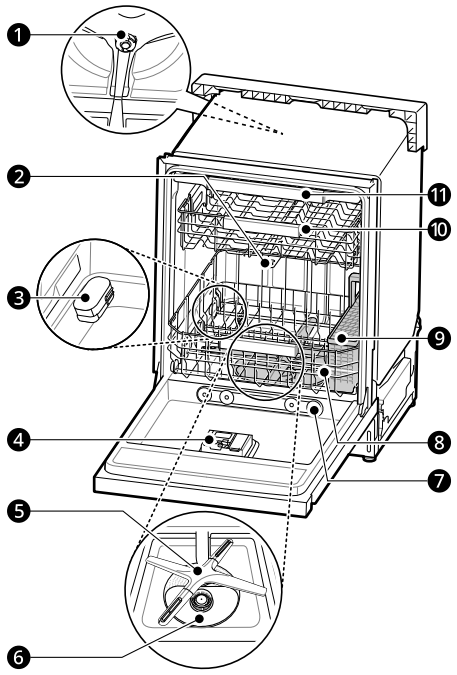

1. Top Wash Impeller
2. Upper Spray Arm
3. Heat Dry Blower
4. Detergent and Rinse Aid Dispenser
5. Lower Spray Arm
6. Filtration System
7. Steam Nozzle†
8. Lower Rack (appearance may vary)
9. Silverware Basket
10. Upper Rack
11. Cutlery Rack

† This feature is only available on some models.

NOTE

- Remove all packing materials from the exterior and interior of the dishwasher before installing the appliance.

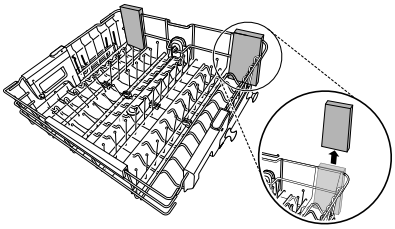

- Press the tab to remove the cable tie by hand. Cutting the tie with a knife or scissors may damage the rack or the silverware basket.

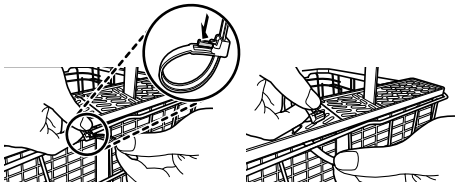

Accessories

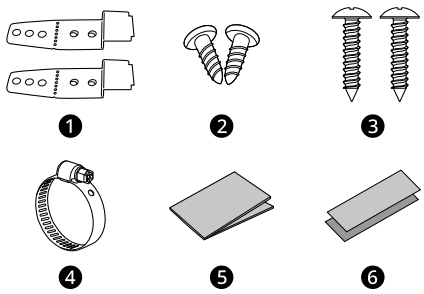

1. Installation Brackets: 2 EA
2. Wood Screws (Φ 4.5 mm x 12 mm): 2 EA
3. Wood Screws (Φ 4 mm x 20 mm): 2 EA
4. Hose Clamp: 1 EA
5. Moisture Barrier for Top (Aluminum Tape): 1 EA
6. Moisture Barrier for Side (Aluminum Tape): 2 EA

NOTE

- Installation brackets, wood screws and hose clamp are inside the silverware basket.

NOTE

- Moisture barrier tape is included in the manual assembly bag.

Product Specifications

The appearance and specifications listed in this manual may vary due to constant product improvements.

Model	LDNPH654*, LDNPM654*
Electrical Requirements	120 V, 60 Hz AC only, 15 A circuit breaker
Water Pressure	20 psi - 80 psi (140 kPa - 550 kPa)
Dimensions (Width X Height X Depth)	23 3/4” X 33 5/8” X 23 3/4” (603 mm X 854 mm X 603 mm)
Inlet Water Temperature	120 °F - 149 °F (49 °C - 65 °C)
Net Weight	82 lb - 84 lb (37 kg - 38 kg)

INSTALLATION

Before Installing

Online Installation Guide

This QR code is for reference only. For complete installation instructions, see the owner's manual supplied with each dishwasher.

English (USA)

https://www.lg.com/us/support/video-tutorials/lg-dishwasher-installation-CT10000009-1366643457088

English (CANADA)

https://www.lg.com/ca_en/support/video-tutorials/CT20098058-1424294103269

French (CANADA)

https://www.lg.com/ca_fr/soutien/aide-produit/CT20100059-20152463332979

⚠ WARNING

- DISCLAIMER - This Guide is strictly confidential and shall not be copied, disclosed, distributed, disseminated, publicized or reproduced, in whole or in part, without the prior written authorization of LG Electronics.

  The Guide may contain inaccuracies and/or typographical errors and may be changed or updated at any time by LGE without notice.

Parts not Provided



❶ Electrical Cable
- 16 AWG, with 2 conductors and 1 ground

❷ Water Supply Tube
- Minimum 3/8″ O.D. copper tubing or stainless steel braided water supply line

❸ Fittings for Tube

❹ Coupler

❺ Electrical Tape

❻ Air Gap

❼ Wire Nuts for 16-Gauge Wiring

❽ Hose Clamp

❾ 3/8″ UL Approved Strain Relief

NOTE

- Power cord installation kit is available on LG.com, part number AEM75698901 (Model name : D-PC1)
- Inlet hose installation kit is available on LG.com, part number AEM75698902.
- Drain extension hose installation kit is available on LG.com, part number AEM75698903.

Tools Needed

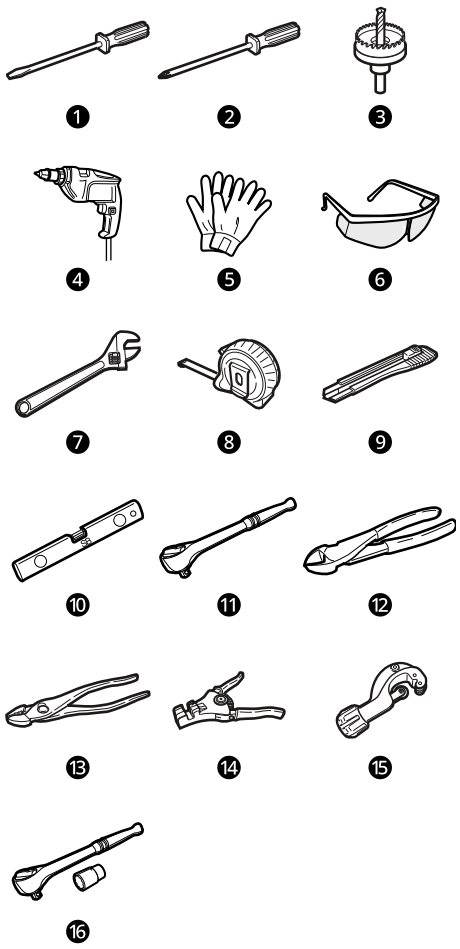

❶ Flat-Blade Screwdriver

❷ Phillips Screwdriver

❸ Hole Saw min. 2 1/2” bit

❹ Electric Drill

❺ Gloves

❻ Safety Glasses

❼ Adjustable Wrench

❽ Tape Measure

❾ Utility Knife

❿ Level

⓫ 1/4” Square Drive Wrench

⓬ Nipper

⓭ Pliers

⓮ Wire Stripper

⓯ Tubing Cutter

⓰ 3/8” Square Drive Wrench + 1/2” Socket

Installation Overview

Please read the following installation instructions first after purchasing this dishwasher or transporting it to another location.

❶ Preparing Cabinet Opening

❷ Preparing Water and Electrical Connections

❸ Preparing Dishwasher

❹ Sliding Dishwasher into Cabinet Opening

❺ Connecting Water Supply Line and Power

❻ Connecting the Drain Hose

❼ Leveling Dishwasher

❽ Securing Dishwasher in Cabinet Opening

❾ Final Installation Check

Product Dimensions

Back View

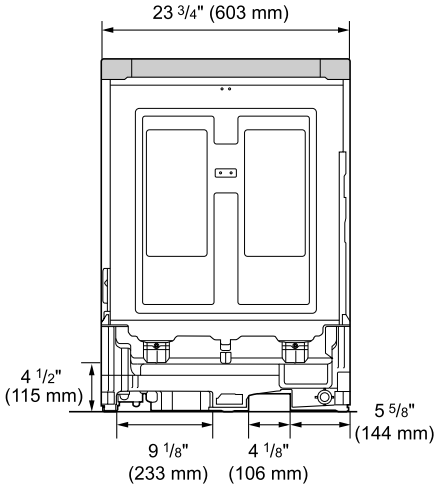

Side View

For easiest installation, see marked areas ❶ for water and electrical clearances in base of

dishwasher. Water supply hose, drain hose and electric cable should be passed through this area.

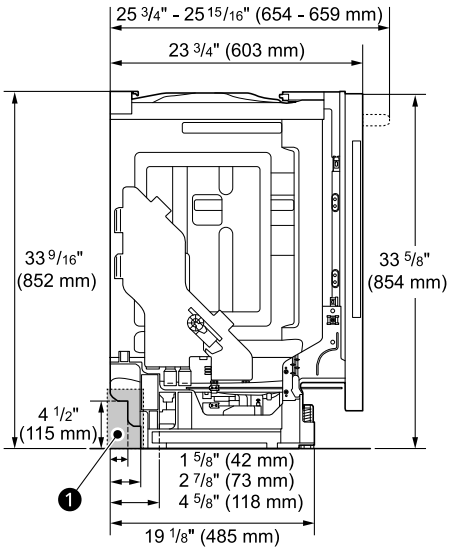

Preparing Cabinet Opening

This dishwasher is designed to fit a standard dishwasher opening. An opening may be needed on both sides to route plumbing and electrical connections.

- To ensure proper drainage, install the dishwasher no more than 12 ft. (3.65 m) from the sink.
- The location must have sufficient space for the dishwasher door to open easily and provide at least 0.1” (2 mm) between the dishwasher and the cabinet sides.
- If installing the dishwasher in a corner, leave a minimum of 2” (50 mm) between the dishwasher and the adjacent wall.
- The adjacent wall must be free of obstructions.
- For flush installations only, you may remove the cabinet brace ❶ inside the cabinet.

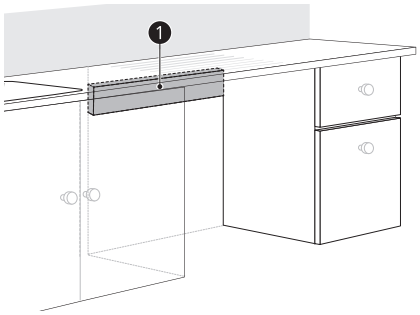

Choosing the Proper Location

1 Select a location as close to the sink as possible for easy connections to water supply line, drain hose and electrical connection.

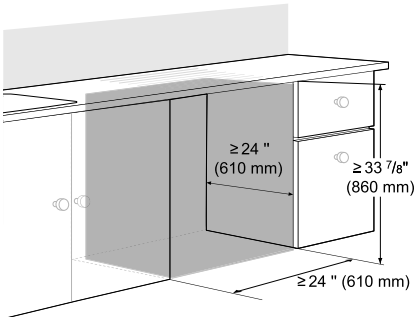

2 To allow for proper clearance of plumbing and electrical, use the template included with the literature to determine the clearance on the side of the cabinet where the cabinet meets the back wall. Using a 2 1/2” diameter hole saw, drill a hole in the target area as shown.

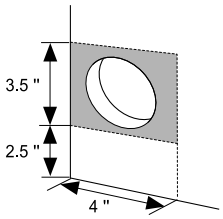

⚠ WARNING

- The opening must be at least 2 1/2" (63.5 mm) in diameter to prevent damage to the cables and hoses during installation.
- Installation damage is not covered by the warranty, and leaks caused by improper installation may result in property damage.
- Do not use existing holes unless they are in the target area.
- Failure to properly locate the hole for the water and drain lines may prevent the dishwasher from installing flush with the cabinets and could result in kinked, pinched, crushed, stressed or damaged lines.

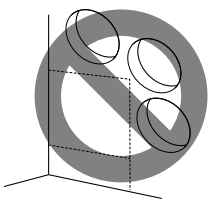

⚠ WARNING

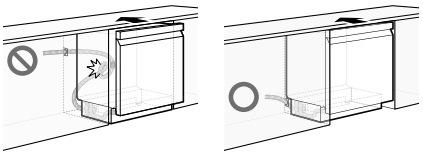

Installing Moisture Barrier Tape

Install the moisture barrier tape to the underside of the countertop to protect the surface from condensation when the appliance is opened.

1 Clean and dry the area on the underside of the countertop and the sides of the cabinet opening where the tape will be applied.

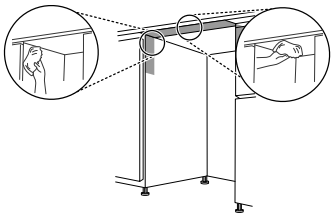

2 Remove the protective film from the tape.

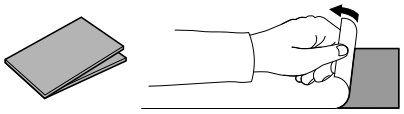

3 Install the tape on the underside of the countertop.

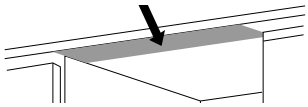

4 Install the shorter pieces of tape on the sides of the cabinet opening at the top.

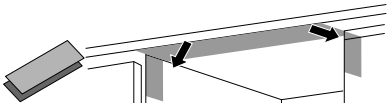

NOTE

- Moisture barrier tape is included in the manual assembly bag.
- Condensation may occur on the underside or along the front edge of the countertop when the room temperature is low.

Preparing Water and Electrical Connections

⚠ WARNING

- Water Connection
  - Do not reuse an old hose. Use only a new hose when installing the dishwasher. The old hose could leak or burst causing flooding and property damage. Contact an LG Customer Information Center for assistance in buying a new hose.
- Electrical Connection
  - Use a time-delay fuse or circuit breaker.
  - Operate this appliance with the correct voltage as shown in this manual and on the rating plate.
  - The wiring must be grounded properly. If in doubt, have it checked by a qualified electrician.
  - Connect the appliance using 3-wires, including a ground wire.
  - The appliance and outlet must be positioned so that the plug is easily accessible.
  - Do not use an extension cable or adapter with this dishwasher.
  - Do not overload the outlet with more than one appliance.
  - The included 16AWG wire nuts should be used.
  - It is the personal responsibility and obligation of the product owner to have a proper outlet installed by a qualified electrician.

⚠ CAUTION

- When connecting the dishwasher water supply line to the house water supply, sealing tape or compound should be used on pipe threads to avoid leaks. Tape or compound should not be used on compression fittings.
- Connect the dishwasher to a hot water supply with a temperature range between 120 °F (49 ℃) and 149 °F (65 ℃). This temperature range provides the best washing results and shortest cycle time. To prevent damage to dishes, the temperature should not exceed 149 °F (65 ℃).
- Water supply pressure must be between 20 psi and 80 psi (140–550 kPa). If the water supply

pressure exceeds 80 psi, a pressure reducing valve must be installed. Otherwise premature failure of the inlet valve may occur.

Routing Water Supply Line and Electrical Wiring

There are 2 channels in the bottom of the dishwasher for routing the water and electrical connections.

- As shown in the bottom view below, channel ❶ is for the water supply line, and channel ❷ is for the electrical cable.

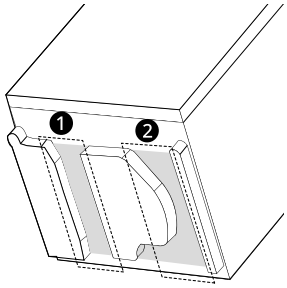

1 Turn off the house water supply and the circuit breaker or dedicated power before connecting the dishwasher.

2 Run the water supply line along the floor 6 1/2" – 7 3/4" (165 mm – 197 mm) from the left side of the opening and tape it in place in front of the opening.

3 Run the electrical cable ❸ along the floor 14" – 16" (356 mm – 406 mm) from the water supply line ❹ and tape it in place.

- The electrical outlet must be within 4 ft. (1.22 m) of either side of the dishwasher.
- The best location for the electrical conduit is on the right side of the back wall. Re-route the electrical cable before installation if the electrical conduit pipe is longer than 3" (76 mm) and is centered on the back wall.

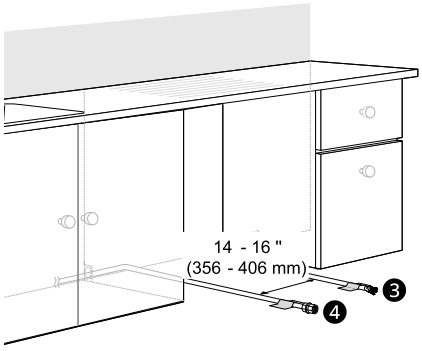

Preparing Dishwasher

⚠ WARNING

- Do not remove safety cover ❶. Removal can result in fire, electric shock or death.

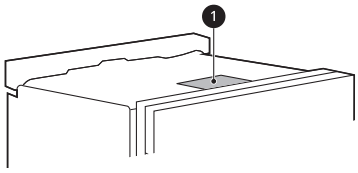

Releasing Drain Hose

Remove the twist tie holding the drain hose to the back of the shipping brace.

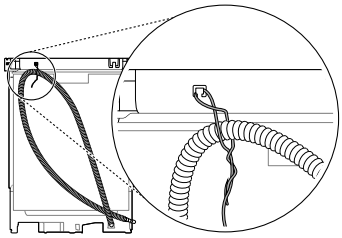

Removable Shipping Brace

The rear shipping brace can be removed if additional clearance is needed when installing the dishwasher under a low countertop.

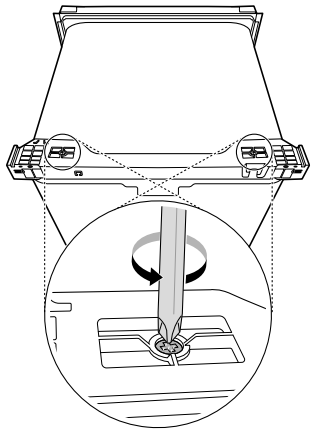

Removing Lower Cover

⚠ CAUTION

- If you lay the dishwasher on its back, do so carefully to avoid damaging the drain hose and the tub.

1 Remove the screws at either side which attach the lower cover to the dishwasher.

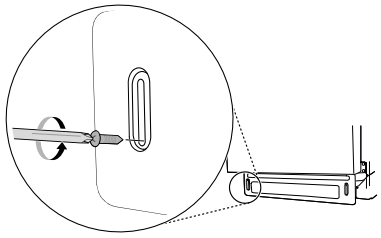

2 Remove the lower cover.

3 If there is insulation padding behind the lower cover, remove it.

4 Set the parts aside until the installation is complete.

Removing Packing Materials from the Interior

Remove all packing materials from the interior of the dishwasher before installing the appliance.

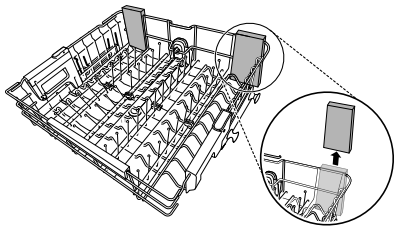

Attaching Installation Brackets

There are 2 options for securing the dishwasher. For countertops made of wood or other materials that won't be damaged by drilling, use method 1.

For countertops made of granite, marble, or other materials that could be damaged by drilling, use method 2.

For a flush installation, choose the appropriate method considering your installation conditions. (A flush installation may not be possible because of the cabinet size or installation circumstances.)

Method 1: Securing to Countertop

1 Insert the tabbed end of the installation brackets into the slots in the upper frame. Rotate the brackets until the tabbed ends are facing up.

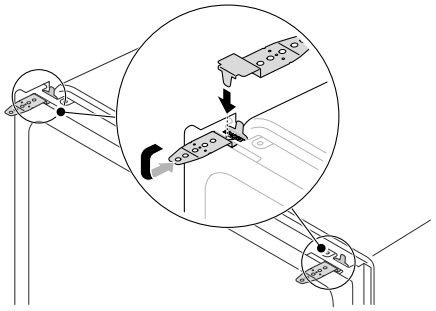

2 Bend the tabs on the brackets to secure them to the frame using a pair of needle nose pliers.

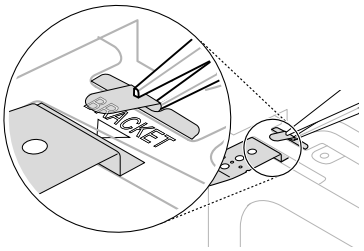

Method 2: Securing to Cabinets

For countertops made of granite, marble, or other materials that could be damaged by drilling, secure the dishwasher to the cabinets. If you have framed cabinets, use screws that are long enough to secure the dishwasher to the cabinets or attach wood spacers (not included) to the cabinets on either side of the dishwasher. See **Securing Dishwasher in Cabinet Opening** for more details.

Sliding Dishwasher into Cabinet Opening

How to Slide Dishwasher

⚠ CAUTION

- Do not pull or lift the dishwasher using the handle ❶. Doing so can damage the door and hinges.

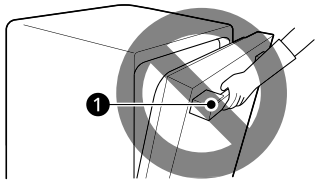

- Do not push the door of the dishwasher with knees when sliding the dishwasher into position. Doing so can damage the front cover.



- Do not push the top of the dishwasher. Doing so can damage the interior of the dishwasher.

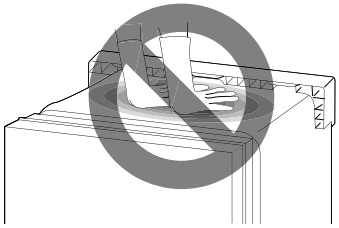

NOTE

- Open the door and grab the body frame and the top front opening ❷ of the tub to move or lift the dishwasher.

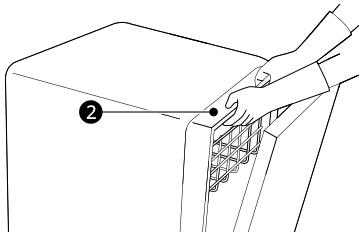

1 Align the dishwasher with the opening. Make sure the water supply line and electrical cable are in the correct positions to slide into their channels properly.

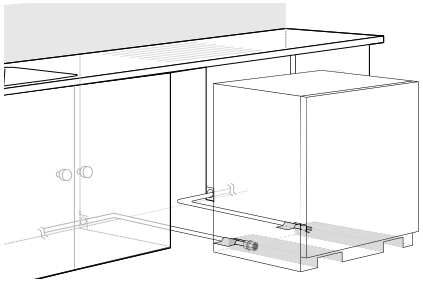

2 Smooth out or pad the edges of the hole drilled for the water supply to avoid damaging the drain hose.

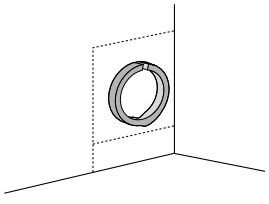

3 Make sure the drain hose is straight before feeding the end of it through the hole for the water supply. As you slide the dishwasher into the opening, you will want to slowly pull on the drain hose from inside the cabinet to take up some slack. Be careful not to kink, pinch, crush or stress the drain hose during installation to avoid leaking and water damage.

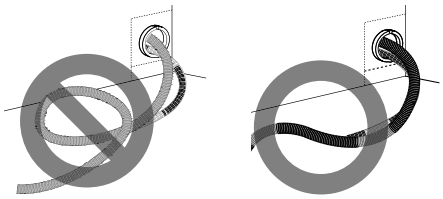

4 Gradually slide the dishwasher into the opening, making sure that the water supply line and electrical cable are passing freely through the channels and do not get caught under the dishwasher.

⚠ CAUTION

- To avoid malfunctions or leakage, it is important that the drain hose not get kinked, pinched, stressed or crushed behind or under the dishwasher or inside the neighboring cabinet.
- Damage resulting from improper installation is not covered under the warranty.
- Slide the dishwasher into place so the door is flush with cabinet doors or drawers. Make sure the rubber trim is not folded over behind the cabinet opening.

  - As you slide the dishwasher into the opening, stop periodically (or have an assistant help) to take up the slack by pulling the drain hose farther into the cabinet.

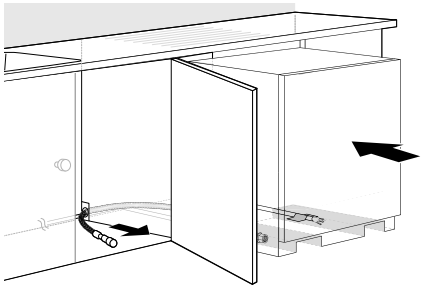

5 Remove the tape from the water supply line and the electrical cable.

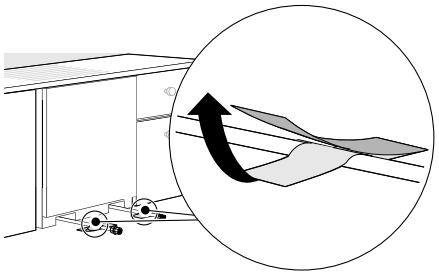

Connecting Water Supply Line and Power

⚠ CAUTION

- Do not turn the dishwasher upside down to connect the water supply line or electrical supply. Doing so can damage the product.

Connecting Water Supply Line

1 With the home water supply turned off, connect the water supply line to the inlet valve on the left front of the dishwasher.

⚠ CAUTION

- Tape or compound should not be used on dishwasher inlet valve.

2 Tighten the compression nut.

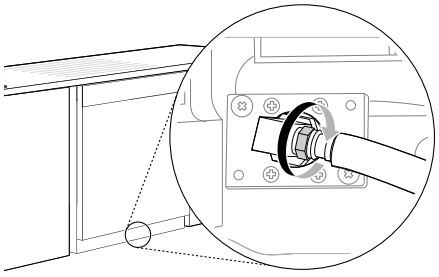

3 Slide the water supply line back through the channel, pulling gently from inside the cabinet to make sure the line is not kinked, pinched, stressed or crushed.

Connecting Power

The dishwasher should have a dedicated properly grounded branch circuit to connect the 3 wire setup which includes the ground wire.

If a 3-prong power supply is used, it should be in an accessible location adjacent to the dishwasher within 4 ft. (1.22 m) of the dishwasher side and not behind the dishwasher.

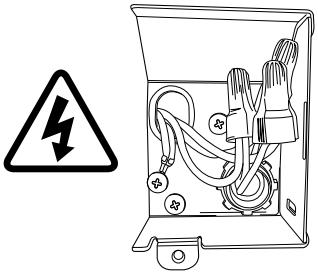

NOTE

- The best location for the electrical conduit is on the right side of the back wall. Re-route the electrical cable before installation if the electrical conduit pipe is longer than 3” (76 mm) and is centered on the back wall.

1 Turn off electrical power to the unit at the circuit breaker.

2 Use a Phillips screwdriver to remove the screw from the junction box cover and remove the cover.

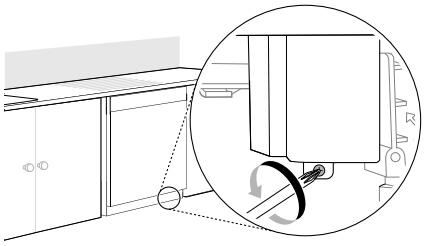

3 Use a Phillips screwdriver to remove 2 screws ❶.

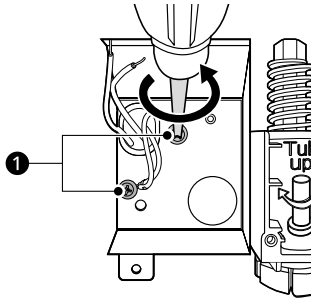

4 Remove the junction box from the appliance.

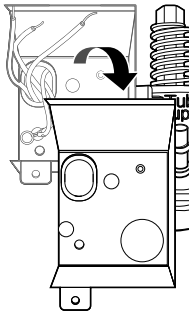

5 Insert a 3/8” strain relief ❷ through the hole in the junction box. Tighten the ring nut ❸ to secure it in place.

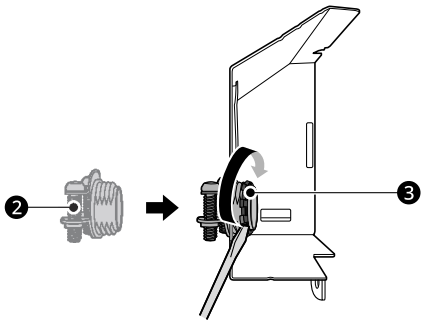

6 Insert the electrical cable through the hole in the strain relief. Tighten 2 screws to secure the cable.

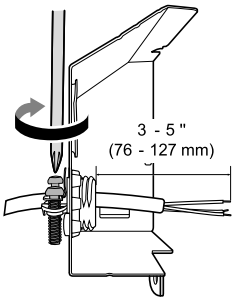

7 Pull the existing wires through the openings in the junction box. Tighten 2 screws ❹ to reassemble the junction box in the appliance.

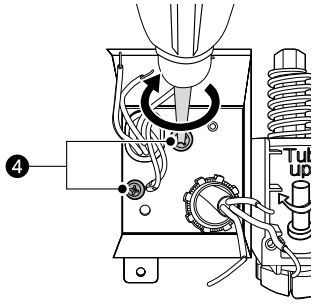

8 Pair the white, black, and green wires to the matching colored wires from the dishwasher. Then twist on the provided wire nuts ❺ tightly to connect the corresponding wires.

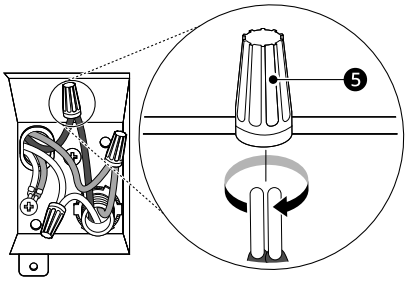

9 Wrap electrical tape ❻ around each connection.

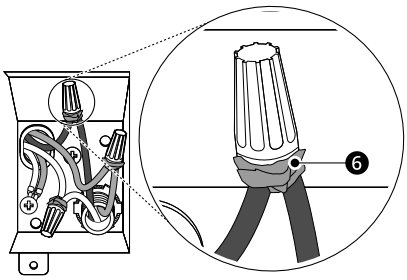

10 Fold the connected wires back into the junction box and screw on the junction box cover.

⚠ WARNING

- Verify that the black wire is hot (120 V). If not, or if you are unsure of the power supply, have it checked by a licensed electrician.

⚠ CAUTION

- Do not leave stripped wire exposed. Trim stripped wire to fit completely inside wire nuts.

Connecting the Drain Hose

If the end of the drain hose does not fit the drain line, use a heat and detergent resistant adapter (not supplied). These may be obtained from a local plumbing supply store.

- Cut the adapter to match the size of the drain connection as shown. Cutting just beyond the flare helps to keep the band clamp in place.

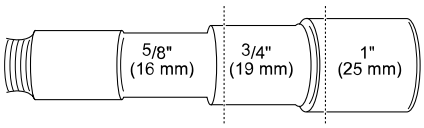

NOTE

- For drain hose installation, use the screw style hose clamp provided with this dishwasher in the silverware basket.
- If connecting the dishwasher's drain hose to the garbage disposal, be sure to follow your garbage disposal's manual for proper installation instructions.

Drain Hose Requirements

- Follow local codes and ordinances.
- Do not exceed 12 ft. (3.65 m) distance to drain.
- Do not connect drain hoses from other appliances to the dishwasher's drain hose.
- If an extension drain hose is required, use a 5/8" or 7/8" inside diameter, 2 ft. – 3 ft. (0.6 m – 0.9 m). length hose and a coupler ❶ for connecting the two hose ends.

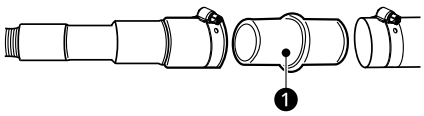

Height of the Drain Hose

The height of the drain hose end must be at least 12" (305 mm) and within 40" (1016 mm) from the base of the dishwasher to avoid water being siphoned from the tub.

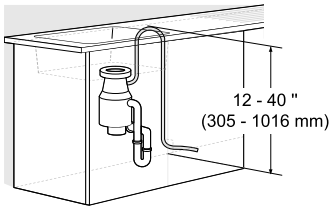

Connecting to Disposal without Air Gap

1 Remove the knockout plug on the disposal with a hammer and screwdriver.

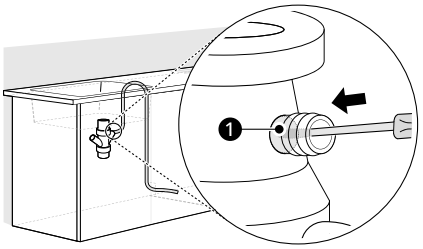

2 Remove the knockout plug ❶ from the disposal.

⚠ CAUTION

- If the knockout plug has not been removed, the dishwasher will not be able to drain properly.

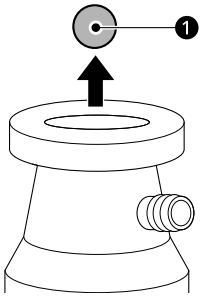

3 Attach the drain hose to the disposal with the hose clamp provided. Move the hose clamp into position and tighten it with a flat-blade screwdriver.

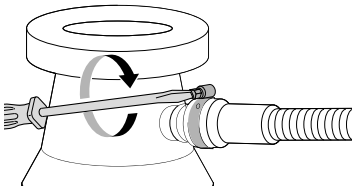

Connecting Waste Tee without Air Gap

The height of the drain hose end must be at least 12” (305 mm) and within 40” (1016 mm) from the base of the dishwasher to avoid water being siphoned from the tub.

1 Remove the knockout plug with a hammer and screwdriver.

⚠ CAUTION

- If the knockout plug has not been removed, the dishwasher will not be able to drain properly.

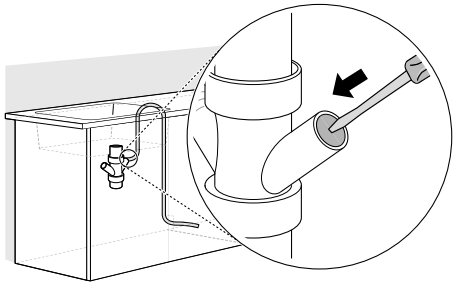

2 Attach the drain hose to the waste tee with the hose clamp provided. Move the clamp into position and tighten it with a flat-blade screwdriver.

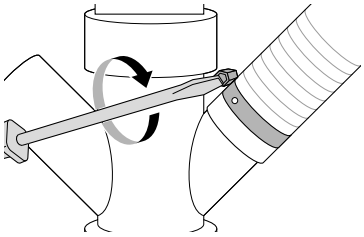

Connecting to Disposal or Waste Tee with Air Gap

1 Remove the knockout plug with a hammer and screwdriver.

2 Connect the end of the drain hose ❶ to the air gap ❷ with the hose clamp provided. Move the clamp into position and tighten it with a flat-blade screwdriver.

- This avoids water being siphoned from the tub.

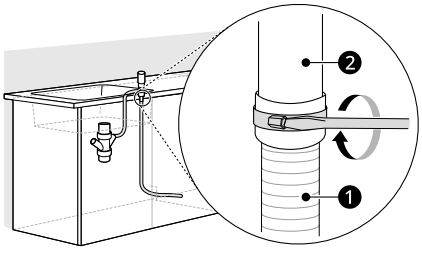

3 If it is not connected, attach the rubber hose connector to the disposal or waste tee with a hose clamp (not provided).

Leveling Dishwasher

Check that the dishwasher is level and adjust the leveling feet if necessary.

⚠ CAUTION

- Failure to level the dishwasher may result in leakage, problems closing the door, or noise.
- Where the cabinet opening is narrower than recommended (see **Preparing Cabinet Opening**), the dishwasher must be carefully leveled and aligned so that the dishwasher is supported fully by the 3 leveling feet and is not hanging from the installation brackets. Failure to do so can result in leaks from the front of the dishwasher, AE errors, difficulty in closing the door, or failure to operate.

Checking Leveling

To check that the tub is level from front to back, remove the lower rack and pour 169 oz. (5 L) of water into the bottom of the tub. The water level should be near the center of both tub lower indentations at the front.

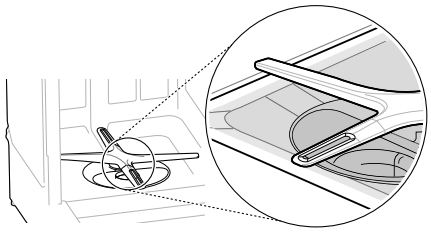

With the lower rack removed, place a level on the inside wall of the tub to check that the dishwasher is level from side to side.

- If you do not have a level, try using a smartphone level application instead.

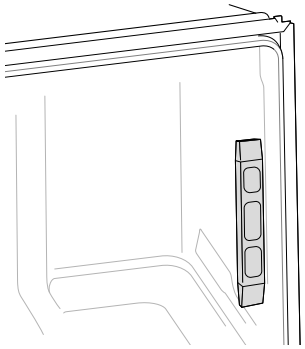

Make sure that the gap between the tub walls and the door liner is the same on either side.

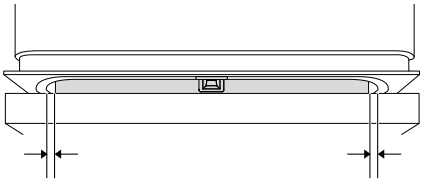

Adjusting Leveling Feet

Adjust as needed until the dishwasher is completely leveled.

- Adjust the front and rear leveling feet until they are all in firm contact with the floor. Failure to level the dishwasher may prevent the door from closing properly and the dishwasher will not turn on.

Adjusting Front Leveling Feet

Use a flat-blade screwdriver to turn the front leveling feet and adjust the front of the tub.

- Turn the front leveling feet clockwise to raise the front of the tub and counterclockwise to lower it.

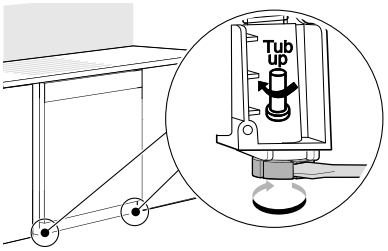

- The adjustments work identically for both front leveling feet.
- When a flat-blade screwdriver is unavailable, use a 1/4" square drive wrench ❶ or 3/8" square drive wrench ❷ with 1/2" socket ❸ to turn the front leveling feet and adjust the front of the tub.

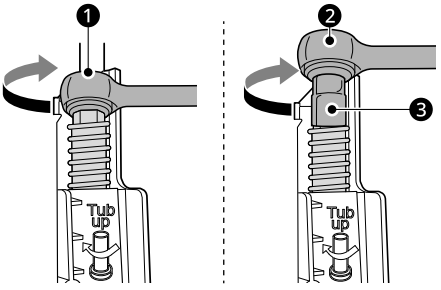

Adjusting Rear Leveling Foot

Use a Phillips screwdriver to adjust the rear leveling foot and the rear of the tub using the center screw at the base of the appliance in the front.

- Turn the center screw clockwise to raise the rear of the tub and counterclockwise to lower it.

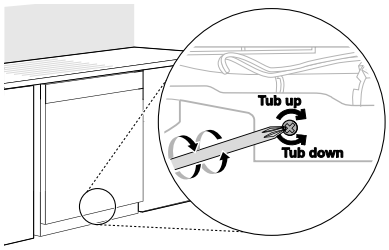

NOTE

- To avoid damaging the screw, do not use an electric screwdriver.

Securing Dishwasher in Cabinet Opening

There are 2 options for securing the dishwasher. For countertops made of wood or other materials that won't be damaged by drilling, use method 1. For countertops made of granite, marble, or other materials that could be damaged by drilling, use method 2.

⚠ CAUTION

- Ensure the dishwasher is level and all leveling feet are in firm contact with the floor before attaching the dishwasher to the countertop or cabinet. If the dishwasher is not leveled properly, the door may not close properly or water may leak.

NOTE

- Installation brackets and screws can be found in the silverware basket.
- Use a magnetic screwdriver.
- Cover the filter hole with towels to prevent screws from falling down into the pump.

Method 1: Securing to Countertop

1 Use the shorter 12 mm wood screws provided to secure the brackets at the top of the dishwasher to the underside of the wood countertop. Drive the screw through the appropriate hole in the installation bracket.

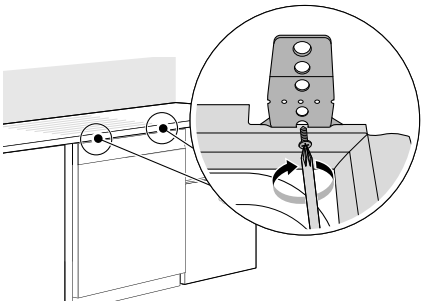

2 Use a nipper or tin snips to carefully trim off the excess part of the bracket.

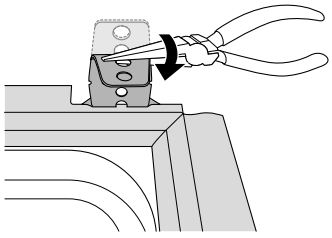

Method 2: Securing to Cabinets

1 Remove the 2 plastic caps from the mounting bracket access holes.

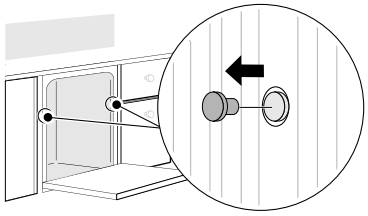

2 Drive a 20 mm wood screw (longer screw) through the mounting bracket and into the cabinet side.

⚠ CAUTION

- If the provided 20 mm screws are not long enough to secure the dishwasher to the cabinet side, use screws that are long enough to secure to the cabinets.
- If you have framed cabinets, use screws that are long enough to secure the dishwasher to the cabinets or attach wood spacers (not included) to the cabinets on either side of the dishwasher.

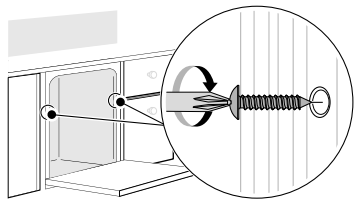

3 Reinstall the plastic caps.

Final Installation Check

Testing the Dishwasher

Check if the dishwasher is properly installed.

1 Turn on the circuit breaker.

2 Turn on the house water supply.

3 Make sure that the door opens and closes smoothly.

- If necessary, level the dishwasher again.
- If the door will not close, make sure the rack is level.

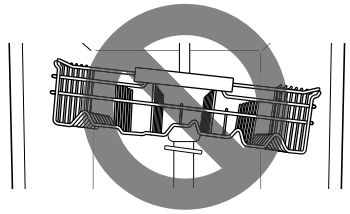

- Make sure that all packaging materials have been removed.

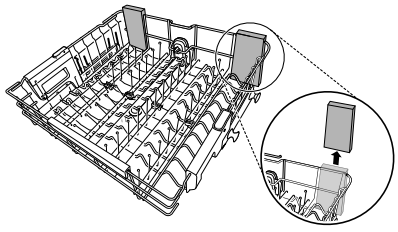

4 Power on the dishwasher and run any cycle to verify proper operation.

5 Check for leaks at the drain hose and water supply connection.

6 If a water leak is detected, open the door and then press and hold the **START** button for 3 seconds to cancel the wash cycle and automatically drain the water from the dishwasher. Tighten all water connections and run another cycle. Repeat until no leaks are detected.

Sound Insulation Sheet
If your model shipped with a sound insulation sheet, follow the instructions provided to install the sheet now. But wait to install the insulation pad and lower cover until after the final installation check.

7 Replace the lower cover.

⚠ CAUTION

- Only install the lower cover provided with the dishwasher. Do not install cabinet baseboard ❶ as it may cause noise and leakage.

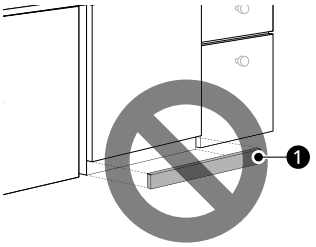

8 Remove the protective film from the door, if present. Leaving the film on may cause discoloration or condensation on the door.

Installation Check Error Codes

Refer to the chart below before calling for service.

Error Code	Possible Cause and Solution
OE	**Drain hose is kinked or pinched.** • Feed the drain and water supply hoses through the hole under the sink. Then gradually slide the dishwasher into the cabinet while pulling on the hoses under the sink to take up any slack. This helps avoid kinking the hoses or trapping them beneath the dishwasher. **Drain hose is connected to the disposal without removing the knockout plug.** • Remove the knockout plug from the disposal. **Waste tee or disposal is clogged.** • Remove knockout plug on the waste tee or disposal.
IE	**Water supply line is kinked under dishwasher.** • Feed the drain and water supply hoses through the hole under the sink. Then gradually slide the dishwasher into the cabinet while pulling on the hoses under the sink to take up any slack. This helps avoid kinking the hoses or trapping them beneath the dishwasher. **House water supply is not turned on.** • Turn the water faucet on.

OPERATION

Before Using

⚠ WARNING

- To reduce the risk of fire, electric shock, or injury to persons, read the **SAFETY INSTRUCTIONS** before operating this appliance.

NOTE

- Connect to the hot water supply only. The water supply temperature should be a minimum of 120 °F (49 °C) for better washing performance and shorter cycle time.
- Follow the instructions for loading the dishwasher to ensure effective cleaning.
- Remove insoluble items such as bones, toothpicks, and pieces of paper while loading the dishwasher.

Quick Start

1 Load the dishes.

- Pull each rack out and load the dishes as described in this manual.
- Only load items that are dishwasher-safe.
- Scrape the dishes free of excess food, bones, and any other hard, non-soluble residue. Remove solid, burned-on scraps from dishes prior to loading in the dishwasher.
- Place items with deep dish bottoms at an angle to help water run off and speed the drying process.
- Do not load items that are not heat-resistant or have decorative metal trim.

2 Add the detergent.

- Using the guidelines in this manual, fill the detergent cup with the recommended amount of detergent and close the lid. If a prewash is desired, the recess on top of the lid should also be filled with detergent.

3 Turn on the dishwasher.

- To turn on the display panel, press the **POWER** button.

4 Check the rinse aid.

- The **Rinse Aid** LED will flash if the level of rinse aid in the dishwasher is low. Add rinse aid if the level is low to maintain the effectiveness of the dry cycle.

5 Select the cycle and options.

- Select the cycle and options that best fit the load by referring to the **Cycle Guide**. The display will show the estimated time for the cycle and options selected.

6 Operate the dishwasher.

- Press the **START** button and then close the door in less than four seconds to operate the dishwasher. If the door is not closed within four seconds, **START** button flashes, and the cycle does not start.

NOTE

- If the door is opened during the cycle, the dishwasher will stop. To resume the cycle, see methods 1 and 2 above.
- If the door is opened during the cycle and is not closed within four seconds after selecting the **START** button, or if the door is closed without pressing the **START** button, the white LED (on some models) with time flashes, an audible tone is heard, and the cycle does not start.

7 End of cycle.

- When the cycle is complete, a chime will sound and the display will show End for 30 seconds.
- It is normal for the dishwasher to chime continuously if you open it during operation or just after the cycle ends. The dishwasher is letting you know that the interior temperatures of the unit are hot and to use

caution when reaching inside. Once the unit has cooled down, the chiming will stop.

⚠ CAUTION

- Do not open the door during operation or immediately after it has completed the wash cycle as the escaping steam may cause scalding as the door is opened.

NOTE

- Empty the lower rack first and then the upper rack. This will avoid water dripping from the upper rack onto dishes in the lower rack.

Auto-Off

The dishwasher automatically turns off after four minutes of inactivity if paused or if no cycle is started.

Control Panel

Control Panel Features

- Refer to the **Using the Option Setting Mode** topic for details on each option.

† This feature is only available on some models.

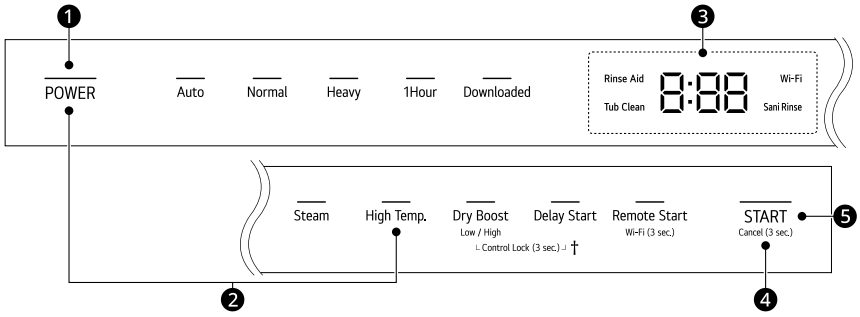

❶ POWER On/Off Button

- Press this button to turn the dishwasher on or off.
- After the cycle is complete, the power automatically turns off for purposes of safety and economy.
- If there is a power surge, power outage, or disruption of any kind, power is automatically turned off for safety.
- When power is connected again, the dishwasher will turn on automatically and resume the cycle.

❷ Option Setting Mode

- Set various options using the **Option Setting Mode**.
- While the appliance is off, Press **POWER** and **High Temp.** at the same time.
- Refer to the **Using the Option Setting Mode** topic for each function of the **Option Setting Mode**.

❸ Display

- **Rinse Aid**
  - This LED flashes when the rinse aid level is low. The LED automatically shuts off when the rinse aid is refilled or the level is set to 0.
  - To adjust the rinse aid level, refer to the **Using the Option Setting Mode** topic.
- **Tub Clean**
  - The **Tub Clean** LED flashes every 30 cycles. To activate or deactivate the LED, refer to the **Using the Option Setting Mode** topic.
- 8:88 : **Digital Display**
  - The digital display on the control panel shows the ESTIMATED cycle time. When the cycle and options are selected, the display shows the total estimated time to complete those selections. During operation, the display shows the remaining estimated operating time.

NOTE

- The estimated time shown on the display does not include delay times for heating water, etc.
- If **Delay Start** is selected, the display shows the delay time in hours.
- Cycle time may vary depending on the soil level of your load.

- CL : **Control Lock**
  - This feature locks all of the buttons on the control panel.

- To activate or deactivate **Control Lock**, press and hold **Dry Boost** and **Delay Start** simultaneously for 3 seconds.

• **Sani Rinse**

- If the **High Temp.** option is added to a cycle, the **Sani Rinse** LED stays lit at the end of the cycle if the water reached a sufficiently high temperature (except on the **Refresh** (P9) cycle).

• **Wi-Fi**

- When the appliance is connected to the internet through a home Wi-Fi network, this LED illuminates.
- Press and hold **Remote Start** for approximately 3 seconds to connect to the network.

❹ **Cancel Button**

• The drain pump activates and the cycle cancels. Once the dishwasher finishes draining, the power turns off.

• Press and hold **START** for 3 seconds to activate.

❺ **START Button**

• To operate the machine, either press **START** and close the door within 4 seconds or close the door and press **START**.

• If more than 4 seconds have passed since pressing **START**, an alarm will sound when the door is closed.

NOTE

• All buttons on the control panel are locked during the cycle to prevent settings from being changed during a cycle.

• Buttons can be controlled after opening the door.

• The door is not locked during the cycle.

Wash Cycles

Select your desired cycle.

Auto

This cycle senses the soil amount and soil toughness and is optimized to achieve the best cleaning.

Normal

This cycle is for daily, regular, or typical use to completely wash a full load of normally soiled dishes. The **Dry Boost Low** option is recommended for everyday use and optimal energy efficiency.

Heavy

This cycle is for heavily soiled dishes and dishes with hardened on soil. This cycle defaults to the strongest spray intensity and uses it to wash heavily soiled dishes.

1 Hour

This cycle will clean and dry lightly soiled dishes in 1 hour.

• This cycle offers heated drying. To improve drying results, add heated dry time by selecting the **Dry Boost** option.

Downloaded

Use a dedicated cycle downloadable via Wi-Fi or NFC. You must install the LG ThinQ smartphone app to download cycles other than the default **Tub Clean** cycle.

NOTE

• Only the cycle code for the current **Downloaded** cycle appears on the appliance. See the smartphone app for cycle codes, names, and more information about the available cycles.

- Default Cycle : P1-**Tub Clean**

• **Tub Clean** (P1)

NOTE

This cycle is for cleaning the inside of the dishwasher. Use the cycle without dishes in the machine. It eliminates residual soils, odor, white spots, and other dirt. Add citric acid or another cleaning agent for more effective results.

- **Express** (P2)

  This cycle will quickly clean lightly soiled dishes.

  - This cycle does not have drying.

- **Rinse** (P3)

  This cycle is a quick rinse for dishes that will not be washed immediately. The cycle rinses dishes that have excess soil to soften dried on residue. Rinsing the dishes helps prevent odors in the dishwasher. No detergent should be used.

  - This cycle does not have drying.

- **Pots & Pans** (P4)

  Cleans heavily soiled cookware. No more hand scrubbing frying pans and pots.

- **Casseroles** (P5)

  Cleans greasy and heavily soiled dishes. Casseroles come out clean.

- **Glassware** (P6)

  Safely washes delicate glassware, leaving it sparkling.

- **Night Care** (P7)

  Quietly washes dishes overnight. Sleep soundly knowing dishes will be clean in the morning.

- **Delicate** (P8)

  Use this cycle to clean delicate items such as fine china and stemware.

- **Refresh** (P9)

  This cycle freshens up and warms dishes that have been unused for a long time.

  - Do not use detergent when using this cycle.
  - The steam option cannot be turned off on this cycle.

- **Dry Only** (P10)

  This cycle blows hot air without washing. The cycle operates even if the auto door open function is turned off.

  - This cycle must be downloaded in Feature Updates before use. For more details, see **LG ThinQ Application Features**.

Options and Extra Functions

Select the desired cycle and then select the options for that cycle.

Steam

This option adds steam at the start of the cycle to improve wash performance.

High Temp.

Raises the main wash temperature to improve cleaning.

If the **High Temp.** option is added to a cycle, the **Sani Rinse** LED stays lit at the end of the cycle if the water reached a sufficiently high temperature. If the dishwasher did not reach a high enough temperature because the **High Temp.** option was not selected, the cycle was interrupted, or the water could not be heated to the required temperature, the indicator will not light up at the end of the cycle. Open and close the door or press **POWER** to turn the indicator off.

NOTE

- This high temperature rinse option can reach temperatures high enough to meet the NSF/ANSI Standard 184 test criteria for dishes and glasses. Certified residential dishwashers are not intended for use in licensed food establishments. Only the **High Temp.** option has been designed to meet the requirements for NSF/ANSI Standard 184 test criteria. There is no intention, either directly or indirectly, that all cycles on a certified machine have passed for NSF 184.

Dry Boost

Select the **Dry Boost** option for better drying performance. This option adds heated drying time to the cycle for better drying results.

Mode	Description
Dry Boost Low	Press the **Dry Boost** button once, for optimal energy efficiency.
Dry Boost High	Press the **Dry Boost** button twice, for better drying results.
Dry Boost Off	Press the **Dry Boost** button three times to turn off the **Dry Boost** option.

- The **Dry Boost Low** option is automatically added to the **Normal** cycle and the **Dry Boost High** option is automatically added to the **Auto** and **Heavy** cycles for better drying performance.

Delay Start

This feature delays the start of a selected cycle. Each time the **Delay Start** button is pressed, the delay time increases by an hour. The delay time can be set from 1 to 12 hours, in one-hour increments.

Remote Start

Use a smartphone to control your appliance remotely. You can also monitor your cycle operation so you know how much time is left in the cycle. Once this function is enabled, you can start a cycle from the smartphone application. If the door is not closed within 4 seconds after pressing **Remote Start**, **Remote Start** is canceled.

Keep Fresh Mode

This feature is only available on some models.

After the wash cycle finishes, the Keep Fresh mode activates. During the Keep Fresh mode, the heater turns off and the fan operates.

- The default setting is 4 hours. (**Normal** cycle is 1 hour.)
- Closing or opening the product's door turns off the Keep Fresh mode.
- To activate or deactivate the Keep Fresh mode, refer to the **Using the Option Setting Mode** topic.

Using Auto Open Dry

The **Auto Open Dry** feature enhances the drying performance by opening the door automatically during the drying stage within the displayed cycle time. For optimum drying results wait until the cycle ends before unloading the dishwasher. The cycle is fully complete when the display shows "End". The door opening time varies depending on the cycle selected.

- The default setting is On.
- To turn the **Auto Open Dry** function On or OFF, see **Using the Option Setting Mode**.

  Turning the **Auto Open Dry** function off may decrease drying performance. For best drying performance, leave the **Auto Open Dry** function turned on.
- **Dry Boost** enhances the drying performance by blowing hot air when the door is open.
- The **Auto Open Dry** function activates only when the product's internal temperature is within a safe range.

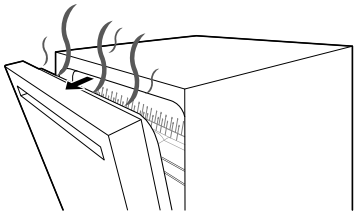

⚠ WARNING

- Be careful as hot air and steam are released when the door opens, and they can cause burns.
- Do not touch the inside of the product or the door-opening mechanism while this function is in operation. Doing so may cause burns, severe injury, or product malfunction.

⚠ CAUTION

- Make sure there are no obstacles in front of the product door when it opens automatically, as this may lead to damage or a malfunction.

NOTE

- When the **Dry Boost** option is activated, the product door opens and hot air drying begins.
  - If you open the door further during the **Auto Open Dry** function, the high-temperature alarm will sound and **Dry Boost** will stop. If you close the door, it will open automatically again and **Dry Boost** will resume.
- Even after the door opens automatically, moisture may remain on some dishes or inside the product.
- The end sound indicates that the wash cycle is finished. For better drying, do not remove the dishes immediately after the end of the sound. Instead, let them dry naturally for at least 30 minutes.
- Natural drying may take 1 to 3 hours depending on the surrounding temperature, humidity, and the material of the dishes.
- Due to the nature of plastic materials, moisture may remain even after using rinse aid.

Cycle/Option Guide

The cycle guide below shows the available options for each cycle.

Cycle		Auto	Normal	Heavy	1 Hour
Soil Level		All levels	All levels	Heavy	Light
Water Usage	(L)	13.1 - 23.6	9.2 - 29.2	24.7 - 27.8	18.1
	(gal)	3.5 - 6.2	2.4 - 7.7	6.5 - 7.3	4.8
Wash Time with Options (Mins.)		117 - 260	129 - 292	168 - 300	60 - 145
Available Options	**Steam**	●	●	●*	
	High Temp.	●	●	●	●
	Dry Boost	●*	●	●*	●
	Delay Start	●	●	●	●

* Default setting

NOTE

- Actual water consumption will vary depending on soil level and hardness of water.
- The actual running time and cycle time displayed may change depending on options chosen, soil level, water temperature, and hardness of water. Therefore, display time and actual running time can be different.
- Options are not available for **Downloaded**. The **Tub Clean** cycle is the default **Downloaded**.

Using the Option Setting Mode

You can set various options by using the **Option Setting Mode**.

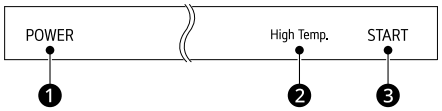

1 Ensure the appliance is off.

2 Press **POWER** ❶ and **High Temp.** ❷ at the same time.

3 Refer to the table to set up each function.

4 Press **START** ❸ to save.

Function	Button	Display
Tub Clean Reminder	**Dry Boost**	Off ↔ On
Rinse Aid Level	**High Temp.**	L2 ⟶ L3 ⟶ L4 ⟶ L0 ⟶ L1 ⟶ L2 ⟶
Clean Light	**Steam**	On ↔ Off
Chime Sound	**Downloaded**	On ↔ Off
Auto Setting	**1 Hour**	On ↔ Off
End Sound	**Heavy**	On ↔ Off
Auto Open Dry	**Remote Start**	On ↔ Off
Keep Fresh Mode	**Delay Start**	On ↔ Off
Wi-Fi	**Normal**	On ↔ Off

NOTE

- Tub Clean Reminder
  - The **Tub Clean** LED flashes every 30 cycles. You can activate or deactivate the LED.
- Rinse Aid Level
  - Adjust the level of rinse aid from L0 to L4.
  - For more information, refer to the **Rinse Aid Dispenser Adjustment** section.
- Clean Light (End Indicator)
  - Turning on Auto Open Dry disables the Clean Light .
  - If Auto Open Dry is off, the Clean Light default is ON, and the white light at the bottom front of the dishwasher remains on after the cycle until the door is opened. If the Clean Light is turned OFF, the end of cycle light turns off after 90 seconds.
- Chime Sound
  - Turn button sounds and notification sounds on or off.
  - The error alert sound cannot be turned off.
- Auto Setting
  - The default ON setting selects options automatically for better washing and drying performance.
  - If the setting is changed to OFF, the options are not selected.
- End Sound
  - Turn the end of cycle sound on or off.
- Auto Open Dry
  - Turn Auto Open Dry on or off.
  - The Auto Open Dry feature enhances the drying performance by opening the door automatically while drying.
- Keep Fresh Mode
  - Turn the Keep Fresh mode on or off.
  - For more information, refer to the **Keep Fresh Mode** section.
- Wi-Fi
  - Turn the Wi-Fi on or off.

Loading the Dishwasher

For effective washing performance, always follow these instructions.

- Remove large particles of food debris from plates including bones before loading.
- Items with burnt on food should be soaked prior to loading in the dishwasher.
- Deep pots or dishes should be placed upside down.
- Make sure that all items do not touch each other.

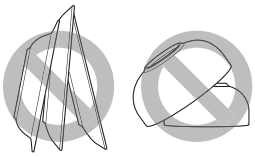

Non-Dishwasher Safe Items

The combination of high water temperature and dishwasher detergents may damage certain items. Do not wash the following items in the dishwasher.

- Copper or anodized aluminum
- Hand painted silver or gold leaf china
- Wood or bone handled utensils
- Iron or non-rustproof utensils
- Plastic items which are not dishwasher safe
- Sterling silver or gold-plated flatware or delicate or metal-rimmed china
- Fragile items such as crystal glasses

⚠ CAUTION

- Do not place pots or pans with plastic handles in the appliance as the handles may deteriorate due to the heat and detergent.
- Waterproof or long-lasting lipstick smudges on glasses may not be removed during the wash.

Loading the Silverware Basket

The silverware basket has separators to avoid scratching and tarnishing of delicate silverware.

Loading Silverware into the Basket

Loading 10 Place Settings

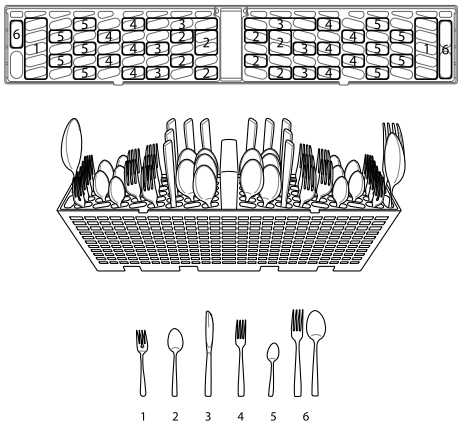

Loading 12 Place Settings

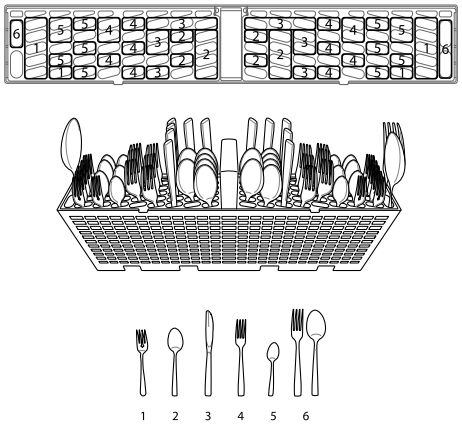

Silverware Loading Tips:

- For best cleaning results, use the top separators in the basket when loading silverware. The separators will prevent nesting of silverware.
- Load sharp items, such as knives, pointing down.
- When unloading the dishwasher, it is best to start with the silverware basket. Doing so will prevent water droplets from falling on your silverware from the upper rack.

⚠ WARNING

- Be careful when loading and unloading sharp items. Load sharp knives with the handles up to reduce the risk of personal injury.

Loading the Lower Rack

Loading Dishes into the Lower Rack

Loading 10 Place Settings

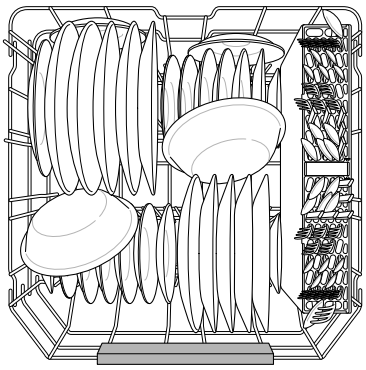

Loading 12 Place Settings

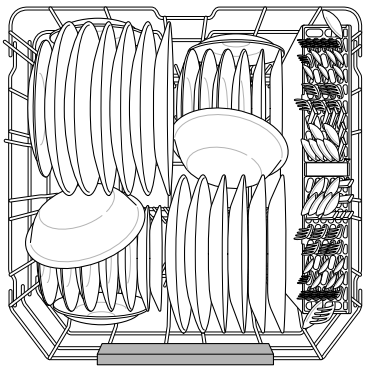

Lower Rack Loading Tips

- Plates should be positioned upright and facing the center of the rack, and pots, pans and large dishes must be turned upside down.
- Load dinner plates, dishes, soup bowls, etc. between the tines.
- Load cookie sheets, cake pans and other large items at the sides or back of the rack. Loading these items in the front of the dishwasher can prevent the water spray from reaching the detergent dispenser.
- Make sure that pot handles and other large items do not stop the rotation of the spray arms.
- The lower rack should not be used for small items such as cups, wine glasses, or small plates. These items should be loaded in the upper rack.

- Make sure that large items do not interfere with the rotation of the spray arms, and do not prevent the detergent dispenser from opening.

Folding Down the Lower Tines

Fold tines down to fit larger dishes; pull tines back up to fit smaller dishes.

Case 1

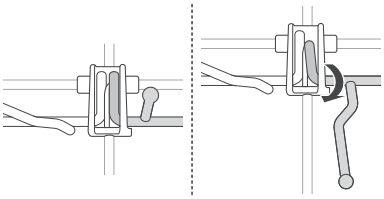

Case 2

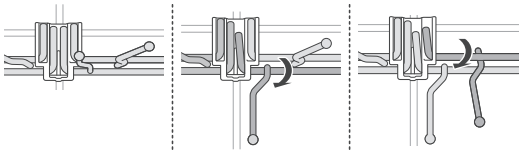

Loading Dishes & Pots

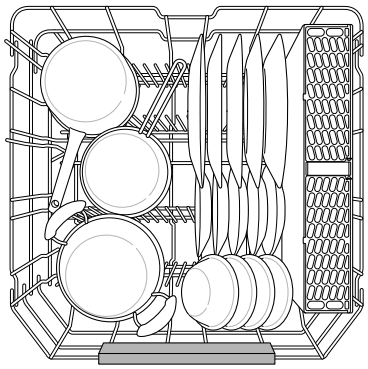

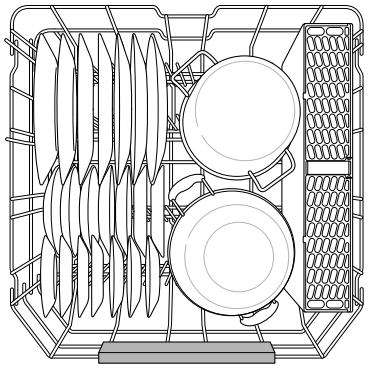

Loading Pots & Bowls

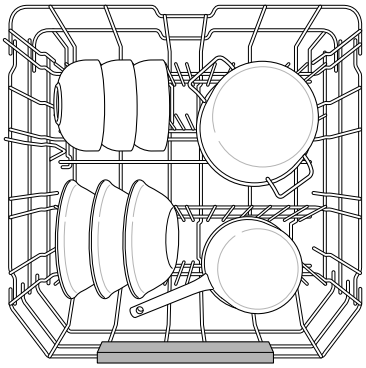

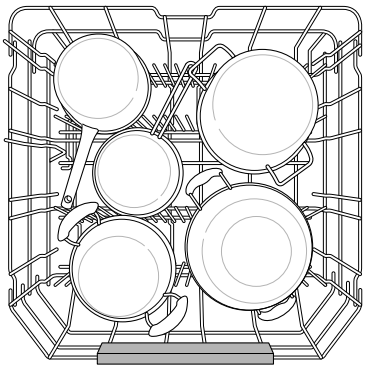

Loading the Upper Rack

Loading Dishes into the Upper Rack

Loading 10 Place Settings

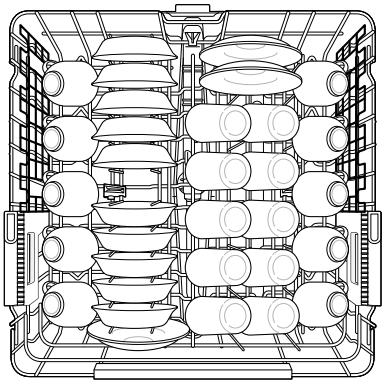

Loading 12 Place Settings

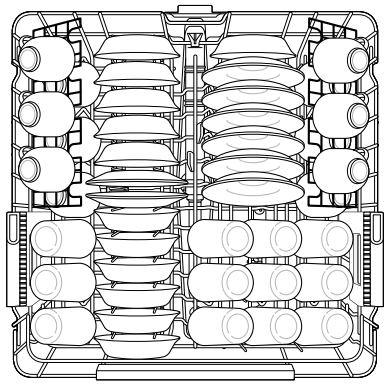

Upper Rack Loading Tips

- Place cups and glasses in the rows between the rack tines. Placing them over the rack tines can lead to breakage and water spots.
- To avoid chipping, do not let stemware touch other items.
- Place items so that the open end faces down for cleaning and drying.
- Do not stack items on top of each other.
- Use the upper rack for small or delicate items such as small plates, cups, saucers, glasses, and dishwasher-safe plastic items.
- Cups, glasses, and bowls must be positioned upside down.
- Make sure items do not interfere with the rotation of the spray arms above and below the upper rack.
- When loading larger items in the upper rack, such as wine glasses or taller cups, it may be necessary to remove the cutlery rack if one is present. (For models with cutlery rack)

Loading the Cup Rack

This feature is only available on some models.

Extra cups or cooking utensils can be laid on the fold down cup racks, which also provide support for long-stemmed glasses.

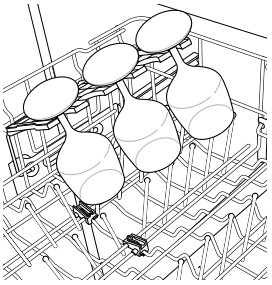

The cup racks can be folded up out of the way for tall glasses.

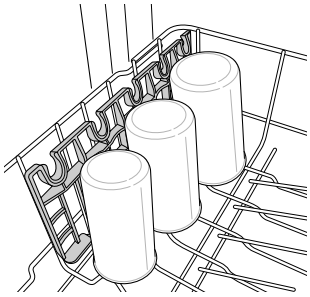

Removing and Replacing Cup Rack

This feature is only available on some models.

The left and right cup racks are interchangeable and can be removed.

1 Slide the cup rack down into its closed position.

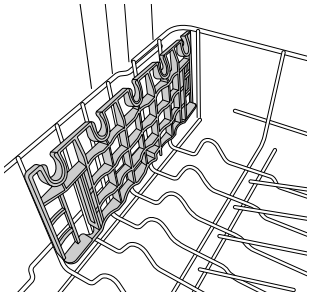

2 Locate the assembly slot ❶ on the cup rack, align the slot with the bar, and firmly pop the rack off the support bar on that side.

- The rack on the left pops free at the back. The rack on the right pops free at the front.

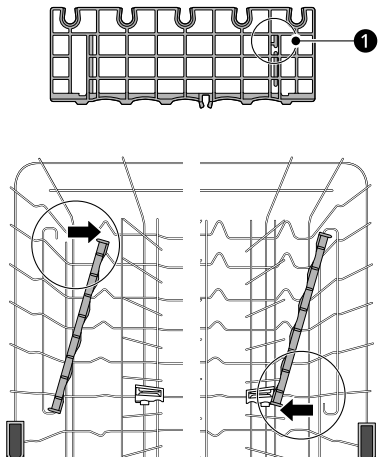

3 Slide the cup rack off the support bar on the opposite side.

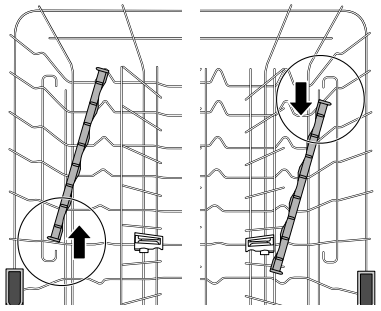

4 Follow the instructions in reverse to replace the cup rack.

Folding Down the Upper Tines

Fold tines down to fit larger dishes; pull tines back up to fit smaller dishes.

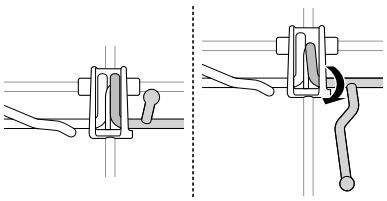

Loading Dishes & Pots

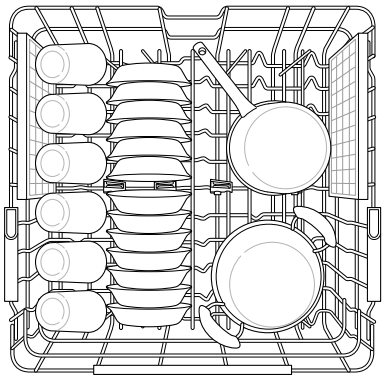

Height Adjustable Upper Rack

To accommodate larger items, the upper rack can be adjusted up or down using the buttons on the left and right sides. The dishwasher ships with the upper rack raised.

There are three available positions for adjusting the height of the upper rack to create more space.

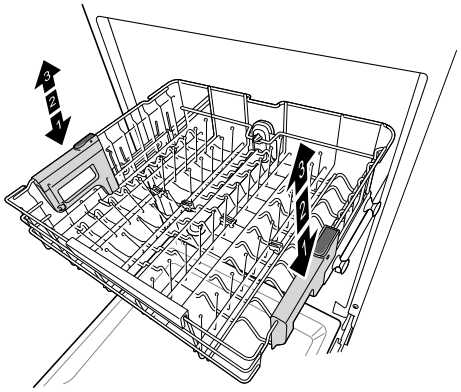

⚠ WARNING

- Before adjusting, ensure the rack is empty of all dishes. Otherwise dishes may get damaged or you may get injured.

NOTE

- Raise the upper rack without pushing the buttons on each side. Pushing the buttons when raising the rack will prevent the rack from locking into position.
- To set the rack to the middle position, it may be easier to lower the rack all the way down and then raise each side of the rack individually until it clicks into place.

NOTE

- Before pushing the upper rack into the dishwasher, ensure the rack height is the same on both sides. If the height is not the same on both sides, the dishwasher door will not shut and the upper spray arm will not connect to the water inlet.

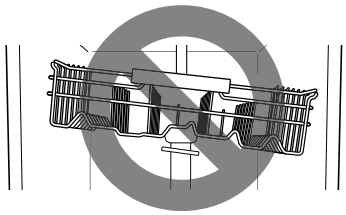

- There is a 2 3/16 inches (56 mm) gain in height when the upper rack is moved to the lower position.
- After adjusting the rack levels, check that the spray arms are free to rotate.
- When the upper rack is in the lower position, make sure the rack and the spray arm do not hit the items on the lower rack.
- When the upper rack is in the lower position, push in the upper rack first, and the lower rack later.
- Pull out the lower rack first, and the upper rack later.

Lowering the Rack

Hold the rack at the center of each side to support its weight. Then, push the button on each side to release the rack and lower it into position.

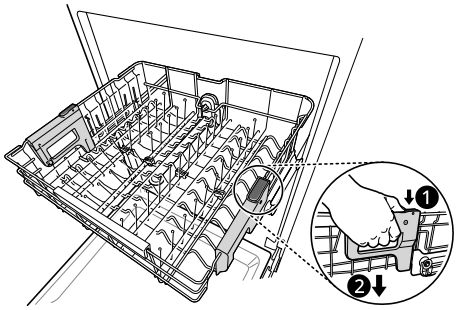

Raising the Rack

Lift the rack at the center of each side until the rack locks into place in the upper position. It is not necessary to lift the lock levers to raise the rack.

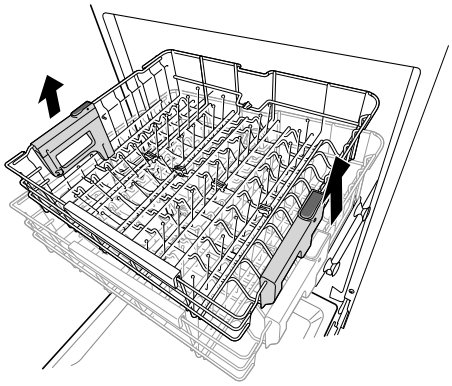

Removing the Snap-In Gliding Upper Rack

This feature is only available on some models.

These instructions are for models with snap-in rack supports rather than wheeled rack supports.

⚠ CAUTION

- The snap-in upper rack should only be removed for servicing. If you need to remove the rack, wear gloves and handle the screwdriver carefully to avoid personal injury or damage to the dishwasher.

1 Pull the upper rack out until it stops. Remove any contents from the rack.

2 To remove the front rack supports from the rails, push the front hooks open with a flat-blade screwdriver while pulling the front of the rack up to snap the front rack support out of the hooks. Repeat to snap the front support out on the opposite side.

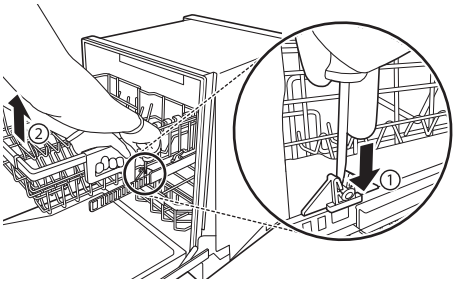

3 To remove the back rack supports from the rails, hold a side rail with one hand, lift the front of the rack, and firmly push the rack back to snap the support out of the hooks in the rear. Repeat on the opposite side.

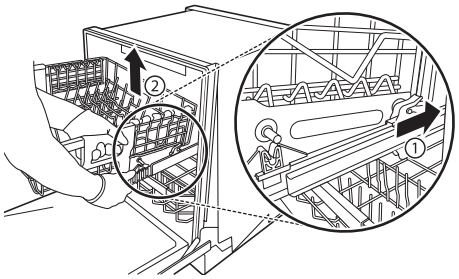

4 To replace the rack, place the back rack supports behind the rear hooks and pull the rack forward to snap the supports into the hooks. Then align the front rack supports with the front hooks and push the front of the rack down to snap the supports into the front hooks.

Loading the Cutlery Rack

The cutlery rack is best suited for flatware. The separators on the cutlery racks help keep flatware separated to avoid damage and improve cleaning.

NOTE

- For best cleaning performance, place flatware in the silverware baskets. Heavily soiled utensils or items with baked on foods should be placed in the upper rack or spoon basket for best performance.

Loading Silverware into the Cutlery Rack

Loading 10 Place Settings

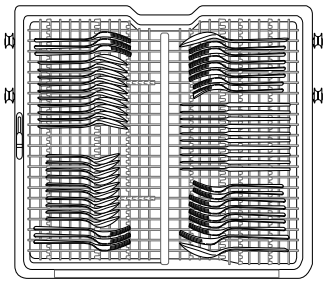

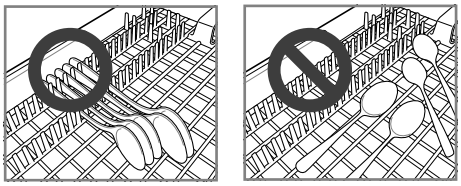

⚠ CAUTION

- Do not place bowls in the center of the cutlery rack. The door may not close properly, resulting in leakage.

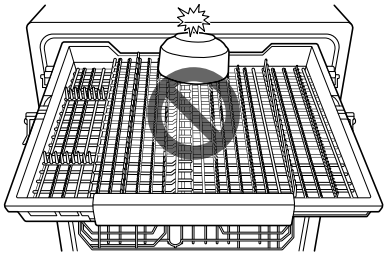

Height Adjustable Tray

This feature is only available on some models.

The tray on the left side can be adjusted to a high or low position to accommodate utensils or cutlery

of different sizes. Remove dishes before adjusting the tray. Adjust the tray by sliding the lever.

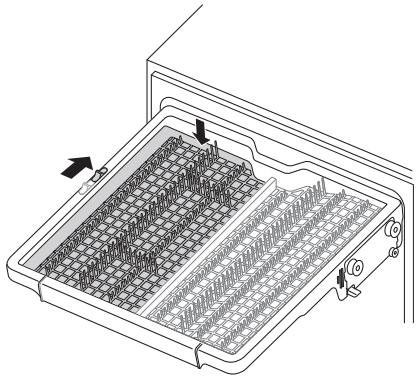

Removing the Cutlery Rack

The entire cutlery rack can be removed if more space is needed on the upper rack for larger items.

Always remove the cutlery from the rack before removing the rack.

Pull the rack out to the end of the rails. Then, lift the front of the rack so that the rollers clear the stop on the end of the rail. The rack can now be slid forward and removed from the rails.

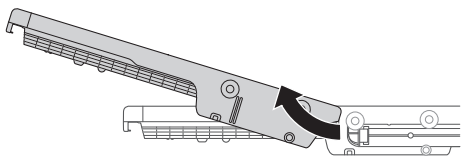

⚠ WARNING

- Be careful when loading and unloading items with sharp edges. Load sharp knives with the blade down to reduce the risk of injury.

Folding Down the Cutlery Tines

Fold tines to fit flatware.

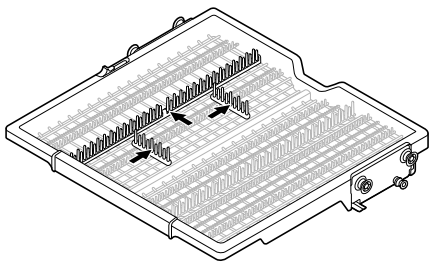

Pull tines back up to fit smaller dishes.

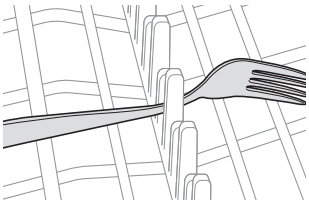

Adding Cleaning Products

Adding Detergent to the Dispenser

- The amount of detergent needed depends on the cycle, load size, and soil level of dishes.
- Put detergent into the detergent compartment before starting any cycle, except the **Rinse** (**Downloaded**: P3) cycle.

⚠ WARNING

- Dishwasher detergent and rinse aid contain chemical components, like all other household detergent. So, they must be kept out of the reach of children.

⚠ CAUTION

- Use only detergent intended for dishwashers. Incorrect detergent may cause the dishwasher to fill with suds during operation. Excess suds may reduce wash performance and may cause the dishwasher to leak.
- To avoid damaging the dispenser, do not pull up on the dispenser to close the dishwasher door.

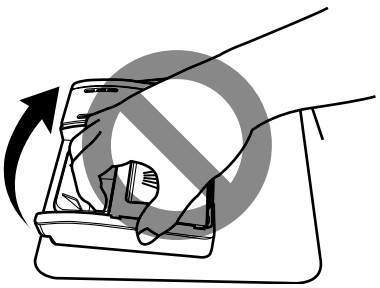

NOTE

- After completion of the wash program, check whether the detergent was completely washed out.
- Some dishwasher detergent tablets may become stuck in the dispenser due to their excessive size. Tablets can be placed onto the base of the wash tub next to the filter before starting the cycle.

- Too much detergent can leave a film on dishes and in the dishwasher, resulting in poor wash performance.
- If dishwasher detergent tablets are used without liquid rinse aid, the dishes and dishwasher interior will have excessive moisture. Select the **Dry Boost** option for better drying performance.
- Using liquid rinse aid improves drying performance by allowing water to drain off of dishes after the final rinse.
- Do not use detergent tablets for shorter wash cycles. The tablet may not dissolve completely, causing detergent residue on dishes and inefficient cleaning.
- Using a wash booster helps remove spots, residue, and the white film caused by hard water. It does not help remove excess detergent residue.

1 Push the button on the dispenser lid to open the cover.

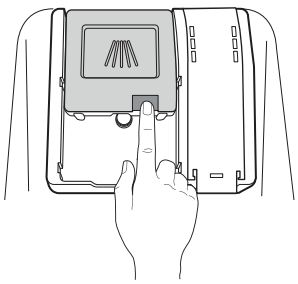

2 Add dishwashing detergent to the main wash compartment until the level is between the lines marked 15 and 25.

- Fill to over the 25 line for hard water or heavily soiled loads.
- Fill to the 15 line for soft water or lightly soiled loads.

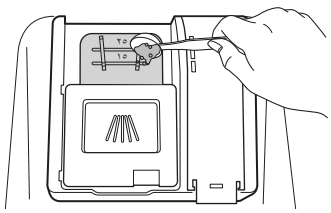

3 Slide the detergent lid closed until it clicks.

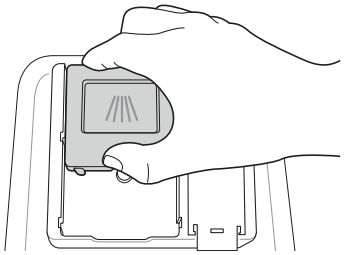

4 If a prewash is desired, fill the recessed prewash compartment area on the lid with detergent.

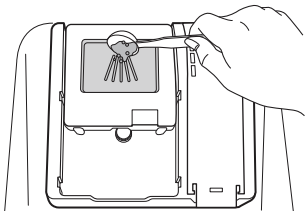

Adding Rinse Aid to the Dispenser

The **Rinse Aid** LED appears in the display when more rinse aid is needed.

The use of rinse aid is recommended to prevent water spots on dishes and to enhance drying performance.

NOTE

- Only use liquid rinse aid in the dishwasher.
- Do not overfill the rinse aid dispenser.
- Wipe off any spilled rinse aid around the dispenser.

1 Open the rinse aid lid by lifting up the flap.

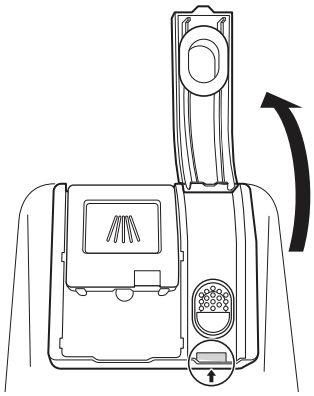

2 Add a liquid rinse aid to the maximum fill level. Allow the rinse aid to settle in the dispenser while filling, or air bubbles may

result in poor drying performance. Avoid overfilling the dispenser.

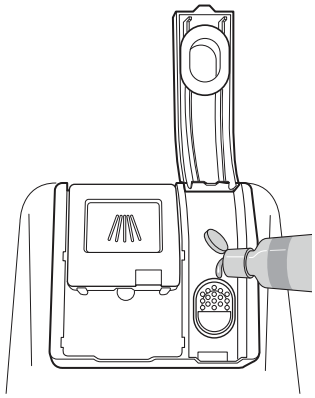

3 Close the lid to lock the dispenser. Rinse aid is dispensed automatically during the final rinse cycle.

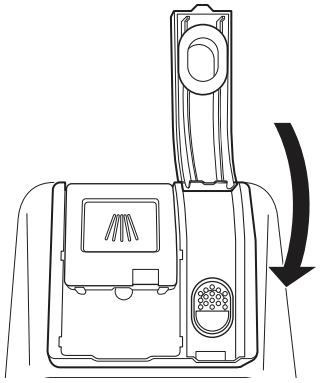

Rinse Aid Dispenser Adjustment

The dispenser has five adjustment levels. The dishwasher is programmed at the factory for a rinse aid dispenser level of 2. This can be checked and adjusted from the control panel.

NOTE

- Adjust the setting higher if you have hard water and notice calcium buildup on your dishes.
- Setting the rinse aid control too low will contribute to spotting and streaking on dishes and poor drying performance.
- Setting the control too high can cause foaming, which will cause poor wash performance.

1 Ensure the appliance is off.

2 Press **Power** and **High Temp.** at the same time.

3 Press **High Temp.** to change the rinse aid dispenser setting. Each press of the button changes the setting one step from L0 to L4. Once the desired rinse aid dispenser setting is selected, press **START** to save.

Refilling the Rinse Aid

How often the dispenser needs to be refilled depends on how often dishes are washed and the rinse aid setting used.

- The **Rinse Aid** LED flashes when more rinse aid is needed, unless the rinse aid dispenser setting is set to L0.

SMART FUNCTIONS

LG ThinQ Application

The **LG ThinQ** application allows you to communicate with the appliance using a smartphone.

LG ThinQ Application Features

- **Feature Updates**
  - Experience new features by updating the features of the product through the **LG ThinQ** application.

    When a new feature is available for update, the outer segments of the digital display light up in rotation when the product is powered on.

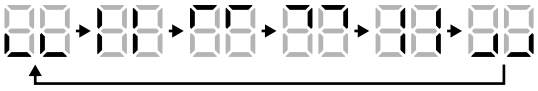

    If you see this notification, press the update notification on your smartphone to enter the Feature Update center of the **LG ThinQ** application. Select a new feature and press the Update button to proceed with the update. The progress of the update is shown in the digital display.

    The status window automatically turns off when the update is successful.

NOTE

- The update may take a long time, and the product cannot be used during that time. Please proceed only when you have sufficient time.
- The update cannot proceed while the product is in use. Wait until after the cycle ends to begin the update.
- If the power is turned off during the update, the update may be interrupted and the product may become unusable.
- If the product cannot be powered on during or after the update, flip the breaker to shut off power for at least 30 seconds and then turn it back on.
- A description of the new features can be found in the application by selecting the dishwasher card and tapping the green arrow icon.
- Once updated, product features may no longer be described accurately in the owner's manual or may have different contents.
- **Dry Only** (P10) must be downloaded in Feature Updates before using.

- **Monitoring**
  - Check the current status, cycle, options, running time and cycle end time for the appliance on a single screen.
- **Downloaded**
  - You can download new and specialized cycles that are not included in the standard cycles on the appliance. Connect the appliance to the app to download a variety of specialty cycles specific to the appliance. Once cycle download is completed in the appliance, the product keeps the downloaded cycle until a new cycle is downloaded.

NOTE

- Only one downloaded cycle can be stored on the appliance at a time.
- The **Tub Clean** (P1) cycle is the default downloaded cycle.

- **Tub Clean Coach**
  - This function shows how many cycles remain before running the **Tub Clean** (**Downloaded**: P1) cycle.
- **Smart Diagnosis**
  - This function provides useful information for diagnosing and solving issues with the appliance based on the pattern of use. Select **Smart Diagnosis** in the app and follow the instructions. For additional information, refer to the online owner's manual.
- **Settings**
  - Set the Rinse Aid Dispenser Level, **Tub Clean** Reminder, Signal Level and Clean Indicator Light.

    When the cycle is complete or the appliance has problems, you have the option of receiving push notifications on a smart phone.
- **Push Alerts**
  - Turn on the **Push Alerts** to receive appliance status notifications.

    The notifications are triggered even if the **LG ThinQ** application is off.
- **Energy Monitoring**
  - You can use the energy monitoring function to check the estimated power usage.

NOTE

- In the following cases, you must update the network information for each appliance in the **LG ThinQ** application under **Device Cards** ⟶ **Settings** ⟶ **Change Network**.
  - wireless router is changed
  - wireless router password is changed
  - Internet service provider is changed
- This information is current at the time of publication. The application is subject to change for product improvement purposes without notice to users.

Installing LG ThinQ Application and Connecting an LG Appliance

Models with QR Code

Scan the QR code attached to the product using the camera or a QR code reader application on your smartphone.

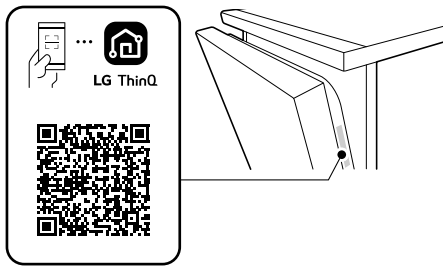

Models without QR Code

1 Search for and install the **LG ThinQ** application from the Google Play Store or Apple App Store on a smartphone.

2 Run the **LG ThinQ** application and sign in with your existing account or create an LG account to sign in.

3 Touch the add (+) button on the **LG ThinQ** application to connect your LG appliance. Follow the instructions in the application to complete the process.

NOTE

- To verify the Wi-Fi connection, check that the **Wi-Fi** LED on the control panel is lit.
- The appliance supports 2.4 GHz Wi-Fi networks only. To check your network frequency, contact your Internet service provider or refer to your wireless router manual.
- **LG ThinQ** is not responsible for any network connection problems or any faults, malfunctions, or errors caused by network connection.
- The surrounding wireless environment can make the wireless network service run slowly.
- If the distance between the appliance and the wireless router is too far, the signal becomes weak. It may take a long time to connect or fail to install the application.
- If the appliance is having trouble connecting to the Wi-Fi network, it may be too far from the router. Purchase a Wi-Fi repeater (range extender) to improve the Wi-Fi signal strength.
- The network connection may not work properly depending on the Internet service provider.
- The Wi-Fi may not connect or the connection may be interrupted because of the home network environment.
- If the appliance cannot be connected due to problems with the wireless signal transmission, unplug the appliance and wait about a minute before trying again.
- If the firewall on your wireless router is enabled, disable the firewall or add an exception to it.
- The wireless network name (SSID) should be a combination of English letters and numbers. (Do not use special characters.)
- Smartphone user interface (UI) may vary depending on the mobile operating system (OS) and the manufacturer.
- If the security protocol of the router is set to **WEP**, network setup may fail. Change the security protocol (**WPA2** is recommended), and connect the product again.

Using the Appliance Remotely

Remote Start

Use a smartphone to control the appliance remotely or check to see how much time is left in the cycle.

Using Remote Start

1 Load the dishes into the dishwasher.

2 Press the **POWER** button.

3 Make sure that the Wi-Fi is connected.

4 Press the **Remote Start** button and close the dishwasher door to enable the **Remote Start** function.

5 Start a cycle from the **LG ThinQ** application on your smartphone.

NOTE

- Once the **Remote Start** mode is enabled, you can start a cycle from the **LG ThinQ** application, but the cycle and option keys on the appliance are deactivated. To activate the keys, disable **Remote Start**.
- The door must be closed in order to activate the **Remote Start** mode.

Disabling Remote Start

While **Remote Start** is activated, open the dishwasher door or press the **Remote Start** button with the door closed.

Radio Equipment Specifications

Type	Operating Frequency Range	Output Power (Max.)
Wireless LAN	2400 MHz - 2472 MHz	< 1 W
Bluetooth†	2400 MHz - 2483.5 MHz	

† This feature is only available on some models.

FCC Notice

The following notice covers the transmitter module contained in this product.

This equipment has been tested and found to comply with the limits for a Class B digital device, pursuant to Part 15 of the FCC Rules. These limits are designed to provide reasonable protection against harmful interference in a residential installation. This equipment generates, uses, and can radiate radio frequency energy and, if not installed and used in accordance with the instructions, may cause harmful interference to radio communications. However, there is no guarantee that interference will not occur in a particular installation. If this equipment does cause harmful interference to radio or television reception, which can be determined by turning the equipment off and on, the user is encouraged to try to correct the interference by one or more of the following measures:

- Reorient or relocate the receiving antenna.
- Increase the separation between the equipment and the receiver.
- Connect the equipment into an outlet on a circuit different from that to which the receiver is connected.
- Consult the dealer or an experienced radio/TV technician for help.

This device complies with part 15 of the FCC Rules. Operation is subject to the following two conditions:

(1) This device may not cause harmful interference and

(2) This device must accept any interference received, including interference that may cause undesired operation.

Any changes or modifications in construction of this device which are not expressly approved by the party responsible for compliance could void the user's authority to operate the equipment.

FCC RF Radiation Exposure Statement

This equipment complies with FCC radiation exposure limits set forth for an uncontrolled environment. This transmitter must not be co-located or operating in conjunction with any other antenna or transmitter.

This equipment should be installed and operated with a minimum distance of 20 cm (7.8 inches) between the antenna and your body. Users must follow the specific operating instructions for satisfying RF exposure compliance.

Industry Canada Statement

This device contains licence-exempt transmitter(s)/ receiver(s) that comply with Innovation, Science and Economic Development Canada's licence-exempt RSS(s). Operation is subject to the following two conditions:

(1) This device may not cause interference.

(2) This device must accept any interference, including interference that may cause undesired operation of the device.

IC Radiation Exposure Statement

This equipment complies with IC radiation exposure limits set forth for an uncontrolled environment.

This equipment should be installed and operated with a minimum distance of 20 cm (7.8 inches) between the antenna and your body.

NOTE

- THE MANUFACTURER IS NOT RESPONSIBLE FOR ANY RADIO OR TV INTERFERENCE CAUSED BY UNAUTHORIZED MODIFICATIONS TO THIS EQUIPMENT. SUCH MODIFICATIONS COULD VOID THE USER'S AUTHORITY TO OPERATE THE EQUIPMENT.

Open Source Software Notice Information

To obtain the source code that is contained in this product, under GPL, LGPL, MPL, and other open source licenses that have the obligation to disclose source code, and to access all referred license terms, copyright notices and other relevant documents, please visit https://opensource.lge.com.

LG Electronics will also provide open source code to you on CD-ROM for a charge covering the cost of performing such distribution (such as the cost of media, shipping, and handling) upon email request to opensource@lge.com.

This offer is valid to anyone in receipt of this information for a period of three years after our last shipment of this product.

Smart Diagnosis™ Function

Using LG ThinQ to Diagnose Issues

If you experience a problem with your Wi-Fi equipped appliance, it can transmit troubleshooting data to a smartphone using the **LG ThinQ** application.

- Launch the **LG ThinQ** application and select the **Smart Diagnosis**™ feature in the menu. Follow the instructions provided in the **LG ThinQ** application.

Using Audible Diagnosis to Diagnose Issues

Follow the instructions below to use the audible diagnosis method.

- Launch the **LG ThinQ** application and select the **Smart Diagnosis** feature in the menu. Follow the instructions for audible diagnosis provided in the **LG ThinQ** application.

1 Press the **POWER** button to turn on the appliance.

- Do not press any other buttons.

2 Place the mouthpiece of your smartphone in front of the display located on the control panel.

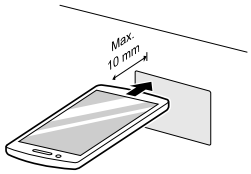

3 Press and hold the **Downloaded** button for 3 seconds or longer while holding the smartphone mouthpiece to the logo until the data transfer is complete.

- Keep the smartphone in place until the data transfer has finished. Time remaining for data transfer is displayed.

4 After the data transfer is complete, the diagnosis will be displayed in the application.

NOTE

- For best results, do not move the smartphone while the tones are being transmitted.

MAINTENANCE

To maintain performance and prevent trouble, it is important to check the outside and inside of the dishwasher, including filters and spray arms, at regular intervals.

⚠ WARNING

- When cleaning the outside and inside of the dishwasher, do not use benzene or thinner. Otherwise, it may cause fire or explosion.
- To prevent injury during care and maintenance or cleaning, wear gloves and/or protective clothing.

Cleaning and Care

Cleaning the Exterior

- Do not use scrub pads or abrasive cleaners on the exterior of the dishwasher.
- Most soil can be removed using a soft, damp cloth or sponge. A mild soap can be used to help release stubborn soil. Rinse and wipe dry with a soft cloth after cleaning.
- Stainless steel surfaces can be polished using a stainless steel cleaner. Follow the instructions on the cleaner, and wipe in the direction of the grain.

⚠ CAUTION

- If cooking oil is spilled on the exterior of the product, wipe it off immediately. Do not clean the exterior of the product with cleaners which contain alcohol, thinners, bleach, benzene, flammable liquids, or abrasives. These substances may discolor or damage the appliance.
- Aromatic hydrocarbons such as benzene can damage the surface of the product. These compounds are found in many common household products such as detergents, paints, cosmetics, air fresheners, disinfectants, and even some foods such as oils, spices, and smoked meat or fish. Regularly wipe down the control panel and other outside surfaces of the product with a clean, damp cloth to help prevent damage.

Cleaning the Interior

- Clean the interior of the dishwasher periodically with a soft, damp cloth or sponge to remove food and dirt particles.
- To remove white spots and odor from inside the dishwasher, run an empty cycle, without detergent, with one cup of white vinegar in a dishwasher safe glass or bowl placed on the upper rack. (Vinegar is an acid and with constant use it could damage the appliance.)
- Using **Tub Clean**
  - Run the **Tub Clean** (**Downloaded**: P1) cycle once a month or after every 30 cycles to eliminate residual soil, odor, white spots and other dirt inside the appliance. The **Tub Clean** (P1) cycle is the default **Downloaded**.

1. Remove all dishes from the appliance.
2. Remove, clean and reinstall the filters. See cleaning instructions in **Cleaning the Filters**.
3. Add 3 tbsp. (40 g) of citric acid to the detergent dispenser or follow the manufacturer's instructions if using a dishwasher cleaning agent. Do not use dishwasher detergent.
4. Run the **Tub Clean** (**Downloaded**: P1) cycle.
5. Press **START**.

NOTE

- Run the **Tub Clean** (**Downloaded**: P1) cycle once a month, or more often if needed, to remove detergent buildup and other residue.
- If you have not used the dishwasher for a long time, refresh the inside by running the **Tub Clean** (**Downloaded**: P1) cycle without detergent. When the cycle is finished, clean the inside and outside of the dishwasher according to the **MAINTENANCE** instructions.

Clogged Drain Air Gap or In-Sink Disposal

Check the drain air gap or in-sink disposal if the dishwasher is not draining well.

NOTE

- The drain air gap and disposal are external plumbing devices that are not part of the dishwasher.
- The warranty provided with the dishwasher does not cover service costs directly associated with the cleaning or repair of the external drain air gap and disposal.

Cleaning the Air Gap

1 Turn off the dishwasher.

2 Remove the air gap cover and the plastic cap underneath it.

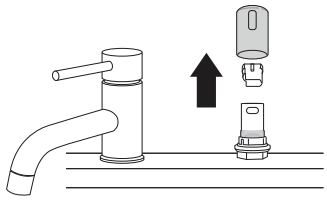

3 Clean out any debris with a toothpick or brush.

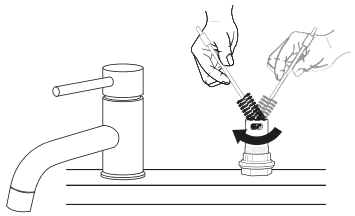

4 Replace the plastic cap and air gap cover.

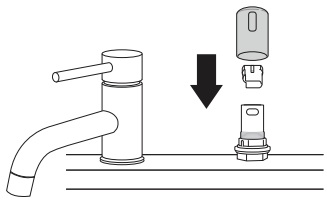

Cleaning the Filters

⚠ WARNING

- Be cautious of sharp edges when handling the stainless steel filter.

⚠ CAUTION

- Remove food residue caught in filters to prevent the buildup of odor-causing bacteria and possible drainage problems.

NOTE

- For best wash performance, clean the filter after each load. If food debris remains in the filter, it may cause an odor.
- In areas with hard water, clean the filter at least once a month with a soft brush.
- Clean the filters using non-abrasive materials and warm running water.

1 Remove the lower rack and position the bottom spray arm so a wider vee is open to the front.

2 Turn the inner filter counter-clockwise and take out the assembled inner filter and stainless steel filter.
With the filters removed, check the sump opening and remove any foreign materials, if needed.

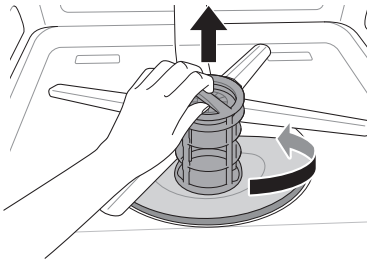

3 Clean the filters with a soft brush under running water. Reassemble the filters before reinstalling them.

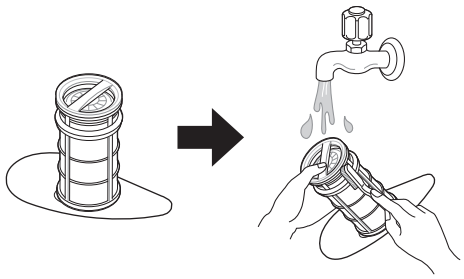

4 To replace the assembled filters, position the spray arm so the wider vee is toward the front. Fit the filters back into the filter holder and secure them by turning the inner filter clockwise until it clicks into place.

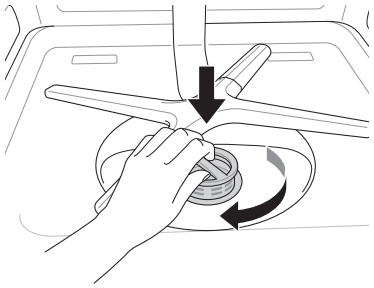

NOTE

- Make sure the filter is assembled correctly before starting a cycle. When assembling, rotate the filter firmly until it clicks.

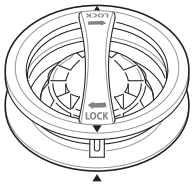

Recommended Filter Cleaning Schedule

Number of Loads Per Week	If you wash dishes before loading	If you scrape and rinse dishes before loading
1 - 3	Every 6 months	Once a year
4 - 7		
8 - 12		Every 6 months
13 - 14		

Number of Loads Per Week	If you only scrape dishes before loading	If you do not scrape or rinse dishes before loading
1 - 3	Four times a year	Once a month
4 - 7		Twice a month (every 15 days)
8 - 12	Every 1.5 months	Every week
13 - 14		Twice a week

Cleaning the Spray Arm

If the spray arm holes are blocked by any food residue, dishes may not be cleaned well due to improper water spray.

It is recommended that the spray arms be cleaned once every two weeks.

Cleaning the Lower Spray Arm

1 Make sure that the water jet holes are not blocked by food particles.

2 If any food residue blocks the spray arm holes, remove it with a pin or piece of stiff wire.

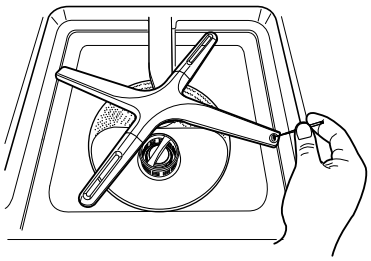

⚠ CAUTION

- To avoid breaking the rolling spray arm sections, do not pull or manually rotate them.

Cleaning the Upper Spray Arm

1 Pull the upper rack forward. Make sure that the water jet holes are not blocked by food particles.

2 When cleaning is necessary, remove the upper spray arm by turning the nut on the

bottom of the spray arm 1/8 turn counter-clockwise and pulling down.

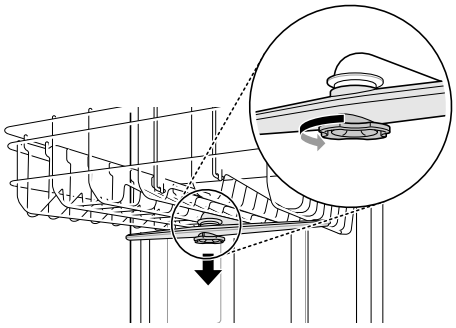

3 Remove food particles by rinsing or shaking the spray arm.

4 If any food residue blocks the spray arm holes, remove it with a pin or any sharp tool.

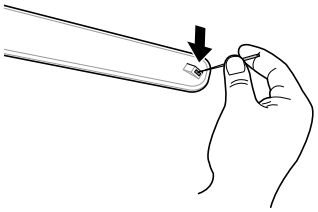

5 After removing the food residue, clean the spray arms under running water.

6 After cleaning the upper spray arm, press it up into place. Turn the nut 1/8 turn clockwise to make sure that the nut locks back into place.

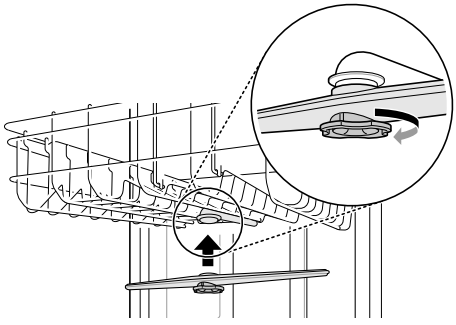

7 After assembly, make sure that the spray arms rotate freely.

Seasonal Maintenance and Storage

- If you will be absent for an extended period of time during warmer months, close the water valve and disconnect the power supply line, or turn off the circuit breaker. Clean the filter, tub and dispenser to prevent odor.
- If you will be absent for an extended period of time during colder months and there is a possibility of freezing temperatures, winterize the water supply lines and the dishwasher itself. Winterization must be performed by qualified service personnel.

TROUBLESHOOTING

The washer is equipped with an automatic error-monitoring system to detect and diagnose problems at an early stage. If the washer does not function properly or does not function at all, check the following before you call for service.

Before Calling for Service

Review this section before calling for service; doing so will save you both time and money.

FAQs

Q: Does this dishwasher require a rinse aid to be used?

A: Rinse aid is strongly recommended to enhance the drying performance of the dishwasher. If a rinse aid is not used, water may remain on the dishes and the tub. Rinse aid helps to ensure that the majority of the water has been sheeted off of the dishes at the end of the rinse and that the load is ready for the dry cycle.

Q: What can be done if my dishes have a cloudy, white film on them after a wash?

A: The cloudy film is usually caused by minerals in the water reacting with the dishwasher detergent. First, be certain not to use too much detergent. Refer to **Adding Detergent to the Dispenser** section for recommended detergent amounts. Add an extra rinse to the cycle. LG Dishwashers use less water than traditional dishwashers, so adding an extra rinse helps to rinse the film away. If the water supply is hard, it may be necessary to add a performance booster that addresses the hard water condition.

Q: How do I remove white film on the tub?

A: Measure 3 tbsp. (40 g) of citric acid powder and use it to fill the main detergent compartment. Run a **Tub Clean** (**Downloaded**: P1) cycle. Do not use detergent.

Q: What steps can I take to improve drying results?

A: Drying performance is directly affected by the amount of heat that remains in the tub after the heated rinse is performed. If your dishwasher is far away from your home's hot water heater, it may be necessary to run the hot water tap in the sink before starting a wash cycle, to ensure that cool water is purged from the hot water lines. This will ensure your dishwasher has a consistent supply of hot water from start to finish. Using the **High Temp.** setting also aids in keeping the inner drum temperature and dishes hotter before drying begins.
LG dishwashers are designed to be used in conjunction with a rinse aid. Using a rinse aid will maximize the amount of water that has already been sheeted away from the dishes before the dry cycle begins. If a rinse aid is used and the performance still needs a boost, adjust the amount of rinse aid used. 2 is the default setting, but if necessary set the level to 3 so more rinse aid is used.
Water tends to bead rather than sheet off plastic and nonstick surfaces, making them more difficult to dry. If washing plastic items in a Normal cycle, select the **Dry Boost** option for better drying results. The **Dry Boost** Low option is automatically added to the **Normal** cycle and the **Dry Boost** High option is automatically added to the **Auto** and **Heavy** cycles for better drying performance.
Allow the dishwasher to completely finish the dry cycle before opening the door. If the door is opened in the middle of the dry cycle, the heat that is necessary for the hybrid dry system to work will escape. This will cause all of the dishes inside to remain wet once the cycle finishes.

Q: What is the hybrid drying system?

A: The dishwasher does not rely on a heating element for the drying process; instead, it relies on the heat that is retained by the dishes and the tub during the wash and rinse cycles to turn the moisture in the tub into humidity.
After the dishwasher door is opened at the end of the cycle, warm and moist air in the dishwasher is then blown out by heat dry blower.

NOTE

- Rinse aid is required to enhance the drying performance. If no rinse aid is used, water may remain on the dishes and the tub.

Q: Why am I hearing a whistling sound from the dishwasher?

A: It is important to determine the duration of the noise and when it happens (what part of the cycle). When water is drawn into the dishwasher, a whistling noise can be heard. This is normal. If the water pressure is too high, it will be louder, so it may be necessary to adjust the water valve to lower the pressure if the noise is too loud.

Q: What kinds of dishes can be placed in the dishwasher?

A: Ensure that the dishes you place in the dishwasher are dishwasher safe. Plastic dishware will not dry as effectively as glass and metal dishware. Plastic items do not retain heat as well as glass and metal dishware. Plastic cups and dishes may require some hand drying before being put away at the end of the cycle.

Q: Can I run a drain only cycle?

A: To drain standing water, press and hold **START** for three seconds until the cycle stops. Once the dishwasher finishes draining, the power turns off.

Q: Why does my dishwasher continuously chime if I open the door during a cycle or right after the cycle has finished?

A: This is normal. The dishwasher is letting you know that the interior temperatures of the unit are hot and to use caution when reaching inside. Once the unit has cooled down, the chiming will stop.

Q: Can I add an extension to the drain hose?

A: If a drain hose extension is required, use a 5/8" or 7/8" inside diameter, 2 ft ~ 3 ft. length hose and a coupler to connect the two hose ends.

Q: An LED is blinking, the machine is chiming, and the dishwasher won't start. What is wrong with the dishwasher?

A: This is a safety feature. The door must be closed within four seconds of pressing the **START** button. If the door is not closed within four seconds, an LED flashes, and the dishwasher does not operate. To start the dishwasher, open the door and either close the door and press **START** (front controls) or press **START** and close the door within four seconds (top controls).

Q: Should I pre-rinse dishes before loading them?

A: No, you don't need to pre-rinse the dishes before loading especially if using the **Normal** and **Auto** cycles. The dishwasher washes dishes clean without pre-rinsing.

User Support Videos

For further assistance, there are videos and tutorials available through the LG.com website.

1 On the www.lg.com home page, click on the **Support** menu tab to bring up the menu selections. Select **Video Tutorials**.

2 Select a product category and then pick a topic or search a keyword.

NOTE

- Scan this QR code to quickly access the video search page on the LG website.

Error Messages

Problem	Possible Cause & Solution
IE	**Water inlet problem.** • Check for a clogged, kinked or frozen water inlet hose. • Check water supply.
OE	**Drainage Problem.** • Check for a clogged, kinked or frozen water drain hose.
	Air gap or disposal is clogged. • Clean air gap or disposal.
	Filters are clogged. • Clean filters.
bE	**Oversudsing caused by improper detergent, such as liquid dish soap.** • Do not use hand dishwashing liquids. Only use detergents which are designed for use in automatic dishwashers. • A bE error can appear if dishes soiled with a lot of foamy food, such as whipped cream, are loaded in the appliance. To clear the error, turn the appliance off and start a new cycle. • To remove detergent residue in the tub, pour approximately 4 oz ~ 8 oz (100 ml ~ 200 ml) of milk into a shallow bowl, place it in the upper rack and then run the appliance on the **Auto** cycle.
	Failure to level dishwasher. • Make sure that the appliance is properly leveled.
AE	**Water leakage** • Turn off the water supply to the dishwasher and call an LG Electronics Customer Information Center at 1-800-243-0000 (U.S.A.) or 1-888-542-2623 (Canada). • The dishwasher makes an alert sound for 10 seconds, and runs the drain pump intermittently. If power is turned off to the machine, the machine powers back on automatically until the AE error is resolved.
FE	**Excessive Water supplied.** • Please call an LG Electronics Customer Information Center at 1-800-243-0000 (U.S.A.) 1-888-542-2623 (Canada).
HE	**Heater circuit failure.** • Please call an LG Electronics Customer Information Center at 1-800-243-0000 (U.S.A.) 1-888-542-2623 (Canada).
tE	**Water temperature sensor error** • Please call an LG Electronics Customer Information Center at 1-800-243-0000 (U.S.A.) 1-888-542-2623 (Canada).

Problem	Possible Cause & Solution
F35	**Heated air temperature sensor error** • Please call an LG Electronics Customer Information Center at 1-800-243-0000 (U.S.A.) 1-888-542-2623 (Canada).
LE	**Wash motor error** • Please call an LG Electronics Customer Information Center at 1-800-243-0000 (U.S.A.) 1-888-542-2623 (Canada).
F31	**Heat air dry fan motor error** • Please call an LG Electronics Customer Information Center at 1-800-243-0000 (U.S.A.) 1-888-542-2623 (Canada).
nE	**Vario motor error** • Please call an LG Electronics Customer Information Center at 1-800-243-0000 (U.S.A.) 1-888-542-2623 (Canada).
F37	**Auto Open Dry motor error** • Please call an LG Electronics Customer Information Center at 1-800-243-0000 (U.S.A.) 1-888-542-2623 (Canada).
P1, P2, P3, P4, P5, P6, P7,P8,P9,P10	**The Downloaded cycle is selected.** • This is not an error code. This code indicates the current **Downloaded** cycle.
n:#, U:#, d:#, t:# **(# is a number.)**	**Test mode is selected.** • This is not an error code. This code is used when testing the dishwasher. Power the unit off and on and the code will disappear.
L0, L1, L2, L3, L4	**Rinse aid level setting mode is selected.** • This is not an error code. This code indicates the current rinse aid level. For more information, refer to the **Adding Cleaning Products** section.
CL	**Control Lock is activated.** • This is not an error code. This code indicates that **Control Lock** is on. To turn **Control Lock** on or off, press and hold **Dry Boost** and **Delay Start** simultaneously for 3 seconds.

Operation

Problem	Possible Cause & Solution
Dishwasher will not operate.	**START button is not pressed.** • Press the **START** button.
	Door is not completely closed. • Make sure that the door is completely closed and latched.
	Power supply or power supply line is not connected. • Connect the power supply or power supply line properly.
	Fuse is blown or circuit breaker tripped. • Replace the fuse or reset the circuit breaker.
Dishwasher operates too long.	**Dishwasher is connected to cold water.** • Check the water supply connection or water heater setting. (Heating cold water takes longer.)
Water remains in tub after completion of cycle.	**Drain hose is kinked or clogged.** • Adjust hose or clear blockage.

Problem	Possible Cause & Solution
Noise	**Some level of noise is normal during operation.** • Detergent cover opening. • Drain pump at the beginning of drain cycle.
	The dishwasher is not level. • Adjust leveling feet.
	Nozzle arm knocking against dishes. • Reposition the dishes.
	Water pressure is too high. • Adjust water pressure.
	Is the amount of cutlery in the cutlery basket or cutlery rack small? • There is no problem with the product due to noise generated by the small amount of tableware, so use it with confidence.
Lights do not illuminate.	**Power is not connected.** • Connect power supply.
Spray arms do not rotate smoothly.	**Holes of spray arms are blocked by food particles.** • Clean the holes of spray arms.
Upper rack is crooked.	**Rack is poorly adjusted.** • See the **Height Adjustable Upper Rack** section.
Dishwasher continuously chimes when the door is opened, during or right after a cycle has completed.	**This is a safety measure. Contact with escaping steam or the hot contents of the dishwasher could result in injury.** • Close the door until the dishwasher and dishes have cooled down. The chiming will stop if the door is closed or the interior temperature has cooled.
Door does not close completely. (For models with cutlery rack)	**Cutlery rack is not properly loaded.** • Push the door handle to close the door properly until it clicks.
The control panel doesn't work while the dishwasher is running.	**All buttons on the control panel are disabled during the cycle to prevent the settings from being changed inadvertently.** • Wait for the cycle to finish before operating the control panel.
Dishwasher did not finish cycle.	**Door was opened during cycle.** • If the door is opened during a cycle, the **START** key must be pressed within 4 minutes or the machine turns off and all settings are lost.
Leaking in front of appliance	**Dishwasher not leveled properly.** • Verify the appliance is level from side to side and from front to back. See leveling instructions in the Installation section.
	Wrong detergent used. • If excessive sudsing is causing the leak, allow the foam to subside for 24 hours then clean the inside of the tub with milk.

Problem	Possible Cause & Solution
Drops of water forming under the sink shelf.	**Is there moisture accumulation under the bench top?** • During the automatic door opening function, high temperature steam will be emitted from the tub and will condense on the surfaces directly above the washer. • Condensation that has formed under the bench top naturally evaporates and disappears after a certain period of time. • However, if the bench top is made of wood or MDF, then aluminum tape must be attached to its underside at the location of the washer to prevent the timber from swelling and long term damage such as rot.

Performance

Problem	Possible Cause & Solution
Odor	**The previous cycle was stopped before completion and residual water remains in the dishwasher.** • Turn on the power, run the **Cancel** cycle option to remove the residual water, then run the **1 Hour** cycle using detergent but with the dishwasher empty.
	There is food in the bottom of the appliance or in the filter. • Clean the filter and the interior according to the **Maintenance** section of the owner's manual.
	Unwashed dishes are left in the appliance for a long time. • Run a cycle with one cup of white vinegar in a dishwasher safe glass or bowl placed on the upper rack. (Vinegar is an acid, and with constant use it could damage your appliance.)
	After cleaning, the appliance smells like detergent. • This is normal.
Food soil remains on dishes.	**Improper cycle selection.** • Select correct cycle based on soil level and type of dishware being washed.
	Water temperature is too low. • Check water supply connection or water heater setting.
	Dishwashing detergent was not used. • Use recommended detergent.
	Low inlet water pressure. • Water pressure should be between 20 and 80 psi.
	Water jet holes on spray arms blocked. • Clean the spray arms.
	Improper loading of dishes. • Make sure dishes do not block spray arm rotation or interfere with detergent dispenser.
	Filters are clogged. • Clean filters.
Cloudiness on glassware.	**Combination of excessive detergent and hard water.** • Use less detergent and use a rinse aid to minimize the problem.
Black or gray marks on dishes.	**Aluminum items rubbing dishes during cycle.** • Reposition the dishes.
Yellow or brown film on inside surfaces of dishwasher.	**Coffee or tea stains.** • Eliminate the stain by using a stain removal product.

Problem	Possible Cause & Solution
Spots and filming on dishes.	**Low water temperature.** • Water supply should be at least 120 °F for best wash performance.
	Overloading. • Do not overload the dishwasher.
	Improper loading. • See the **Operation** section.
	Insufficient water pressure. • Water pressure should be between 20 and 80 psi.
	Insufficient detergent. • Add the recommended amount of detergent. See the Operation section.
	Rinse aid dispenser is empty. • Refill rinse aid dispenser.
	Hard water buildup in the tub. • Remove all dishes, silverware and silverware holder from dishwasher. Only racks should remain in tub. For best results, use citric acid powder (can be found in canning sections of most grocery stores or online). Measure 3 tablespoons (40 g) of citric acid powder. Fill main wash compartment with measured powder. If you cannot find citric acid powder, pour approximately one cup (200 ml - 300 ml) of white vinegar into shallow bowl and place in upper rack. Run **Tub Clean** (**Downloaded**: P1) cycle. Do not use detergent.
Dishes don't dry.	**Rinse aid dispenser empty.** • Check and refill the rinse aid dispenser if empty.
	Auto Open Dry is off. • The Auto Open Dry feature can be turned on using the Option Setting Mode. Refer to **Using the Option Setting Mode**.

Wi-Fi

Problem	Possible Cause & Solution
Trouble connecting appliance and smartphone to Wi-Fi network	**The password for the Wi-Fi network was entered incorrectly.** • Delete your home Wi-Fi network and begin the connection process again.
	Mobile data for your smartphone is turned on. • Turn off the **Mobile data** on your smartphone before connecting the appliance.
	The wireless network name (SSID) is set incorrectly. • The wireless network name (SSID) should be a combination of English letters and numbers. (Do not use special characters.)
	The router frequency is not 2.4 GHz. • Only a 2.4 GHz router frequency is supported. Set the wireless router to 2.4 GHz and connect the appliance to the wireless router. To check the router frequency, check with your Internet service provider or the router manufacturer.
	The appliance and the router are too far apart. • If the appliance is too far from the router, the signal may be weak and the connection may not be configured correctly. Move the router closer to the appliance or purchase and install a Wi-Fi repeater.

Problem	Possible Cause & Solution
Trouble connecting appliance and smartphone to Wi-Fi network	**During Wi-Fi setup, the app is requesting a password to connect to the product (on certain phones).** • Locate the network name which starts with "LG" under Settings > Networks. Note the last part of the network name. - If the network name looks like LGE_Appliance_XX-XX-XX, enter lge12345. - If the network name looks like LGE_Appliance_XXXX, enter XXXX twice as your password. For example, if the network name appears as LGE_Appliance_8b92, then you would enter 8b928b92 as your password. In this instance, the password is case sensitive and the last 4 characters are unique to your appliance.

LIMITED WARRANTY

USA

TERMS AND CONDITIONS

ARBITRATION NOTICE: THIS LIMITED WARRANTY CONTAINS AN ARBITRATION PROVISION THAT REQUIRES YOU AND LG ELECTRONICS ("LG") TO RESOLVE DISPUTES BY BINDING ARBITRATION INSTEAD OF IN COURT, UNLESS YOU CHOOSE TO OPT OUT. IN ARBITRATION, CLASS ACTIONS AND JURY TRIALS ARE NOT PERMITTED. PLEASE SEE THE SECTION TITLED "PROCEDURE FOR RESOLVING DISPUTES" BELOW.

Should your LG Dishwasher ("Product") fail due to a defect in materials or workmanship under normal and proper use, during the warranty period set forth below, LG will, at its option, repair or replace the Product. This limited warranty is valid only to the original retail purchaser of the Product ("You") and applies only when purchased lawfully and used within the United States including U.S. Territories.

Warranty Period	Scope of Warranty	HOW SERVICE IS HANDLED
One (1) year from date of original retail purchase, or from the date of delivery as per applicable law	Labor / Parts	LG will also provide, free of charge, all labor and on-site service to replace the defective part.
Two (2) years from date of original retail purchase, or from the date of delivery as per applicable law	Main control board† / Racks / Stainless Steel Door Liner / Tub	Main control board, dishwasher racks, stainless steel door liner, tub. Customer will be responsible for any labor or in-home service to replace defective parts.
Ten (10) years from date of original retail purchase, or from the date of delivery as per applicable law	Direct Drive Motor	Direct Drive motor. Customer will be responsible for any labor or in-home service to replace defective parts.

† Main control board is located on the bottom right of the dishwasher when viewed from the front.

- Replacement Products and parts are warranted for the remaining portion of the original warranty period or ninety (90) days, whichever is greater.
- Replacement Products and parts may be new, reconditioned, refurbished, or otherwise factory remanufactured.
- Replaced Product or part(s) will be the property of LG.
- Proof of original retail purchase specifying the Product model and date of purchase is required to obtain warranty service under this limited warranty.

EXCEPT TO THE EXTENT PROHIBITED BY APPLICABLE LAW, ANY IMPLIED WARRANTY OF MERCHANTABILITY OR FITNESS FOR A PARTICULAR PURPOSE ON THE PRODUCT IS LIMITED IN DURATION TO THE DURATION OF THE ABOVE LIMITED WARRANTY. UNDER NO CIRCUMSTANCES SHALL LG OR ITS U.S. DISTRIBUTORS/DEALERS BE LIABLE FOR ANY INDIRECT, INCIDENTAL, CONSEQUENTIAL, SPECIAL, OR PUNITIVE DAMAGES, INCLUDING, WITHOUT LIMITATION, LOST GOODWILL, LOST REVENUES OR PROFITS, WORK STOPPAGE, IMPAIRMENT OF OTHER GOODS, COST OF REMOVAL AND REINSTALLATION OF THE PRODUCT, LOSS OF USE, OR ANY OTHER DAMAGES WHETHER BASED IN CONTRACT, TORT, OR OTHERWISE. LG'S TOTAL LIABILITY, IF ANY, SHALL NOT EXCEED THE PURCHASE PRICE PAID BY YOU FOR THE PRODUCT.

SOME STATES DO NOT ALLOW THE EXCLUSION OR LIMITATION OF INCIDENTAL OR CONSEQUENTIAL DAMAGES OR LIMITATIONS ON HOW LONG AN IMPLIED WARRANTY LASTS, SO THE ABOVE EXCLUSIONS OR LIMITATIONS MAY NOT APPLY TO YOU. THIS LIMITED WARRANTY GIVES YOU SPECIFIC LEGAL RIGHTS AND YOU MAY ALSO HAVE OTHER RIGHTS THAT VARY FROM STATE TO STATE.

THIS LIMITED WARRANTY DOES NOT COVER:

- Service trips to deliver, pick up, or install, educate how to operate, correct wiring, or correct unauthorized repairs.
- Damage or failure of the Product to perform during power failures and interrupted or inadequate electrical service.
- Damage or failure of the Product caused by leaky or broken water pipes, frozen water pipes, restricted drain lines, inadequate or interrupted water supply or inadequate supply of air.
- Damage or failure of the Product resulting from operating the Product in a corrosive atmosphere or contrary to the Product owner's manual.
- Damage or failure of the Product caused by accidents, pests and vermin, lightning, wind, fire, floods, acts of nature, or any other causes beyond the control of LG.
- Damage or failure of the Product caused by unauthorized modification or alteration, or if the Product is used for other than the intended purpose, or any water leakage where the Product was not properly installed.
- Damage or failure of the Product caused by incorrect electrical current, voltage, or plumbing codes.
- Damage or failure of the Product caused by transportation, storage, and/or handling, including scratches, dents, chips, and/or other damage to the finish of the Product, unless such damage is reported within one (1) week of delivery.
- Damage or failure of the Product resulting from misuse, abuse, improper installation, repair, or maintenance. Improper repair includes the use of parts not authorized by LG. Improper installation or maintenance includes installation or maintenance contrary to the Product owner's manual.
- Damage or failure of the Product caused by the use of parts, components, accessories, consumable cleaning products, or any other products or services that were not authorized by LG.
- Damage or missing items to any display or open box Product.
- Refurbished Product or any Product sold "As Is", "Where Is", "With all Faults", or similar disclaimer.
- Products with original serial numbers that have been removed, altered, or cannot be readily determined.
- Increases in utility costs and additional utility expenses.
- Any noises associated with normal operation.
- Products used for other than normal and proper household use (e.g., commercial, business, or industrial settings, including any retail or food service establishments, or any commercial lodging/transient rental setting), or any use contrary to the Product owner's manual.
- Costs associated with removal and reinstallation of the Product for repairs, or the removal and reinstallation of the Product if it is installed in an inaccessible location or not installed in accordance with the Product Owner's manual.
- Accessories, removable components, or consumable parts (e.g. Shelves, door bins, drawers, water/air filters, racks, light bulbs, batteries, etc., as applicable), except for internal/functional parts covered under this limited warranty.

The cost of repair or replacement under these excluded circumstances shall be borne by You.

TO OBTAIN WARRANTY SERVICE AND ADDITIONAL INFORMATION

Call 1-800-243-0000 and select the appropriate option from the menu.

Or visit our website at http://www.lg.com.

Or by mail: LG Electronics Customer Service P.O. Box 240007 Huntsville, AL 35813 ATTN: CIC

PROCEDURE FOR RESOLVING DISPUTES:

ALL DISPUTES BETWEEN YOU AND LG ARISING OUT OF OR RELATING IN ANY WAY TO THIS LIMITED WARRANTY OR THE PRODUCT SHALL BE RESOLVED EXCLUSIVELY THROUGH BINDING ARBITRATION, AND NOT IN A COURT OF GENERAL JURISDICTION. BINDING ARBITRATION MEANS THAT YOU AND LG ARE EACH WAIVING THE RIGHT TO A JURY TRIAL AND TO BRING OR PARTICIPATE IN A CLASS ACTION.

Definitions. For the purposes of this section, references to "LG" mean LG Electronics U.S.A., Inc., its parents, subsidiaries and affiliates, and each of their officers, directors, employees, agents, beneficiaries, predecessors in interest, successors, assigns and suppliers; references to "dispute" or "claim" shall include any dispute, claim or controversy of any kind whatsoever (whether based in contract, tort, statute, regulation, ordinance, fraud, misrepresentation or any other legal or equitable theory) arising out of or relating in any way to the sale, condition or performance of the product or this Limited Warranty.

Notice of Dispute. In the event you intend to commence an arbitration proceeding, you must first notify LG in writing at least 30 days in advance of initiating the arbitration by sending a letter to LG at LG Electronics, USA, Inc. Attn: Legal Department- Arbitration 111 Sylvan Avenue, Englewood Cliffs, NJ 07632. You and LG agree to engage in good faith discussions in an attempt to amicably resolve your claim. The notice must provide your name, address, and telephone number; identify the product that is the subject of the claim; and describe the nature of the claim and the relief being sought. If you and LG are unable to resolve the dispute within 30 days, either party may proceed to file a claim for arbitration.

Agreement to Binding Arbitration and Class Action Waiver. Upon failure to resolve the dispute during the 30 day period after sending written notice to LG, you and LG agree to resolve any claims between us only by binding arbitration on an individual basis, unless you opt out as provided below. Any dispute between you and LG shall not be combined or consolidated with a dispute involving any other person's or entity's product or claim. More specifically, without limitation of the foregoing, any dispute between you and LG shall not under any circumstances proceed as part of a class or representative action. Instead of arbitration, either party may bring an individual action in small claims court, but that small claims court action may not be brought on a class or representative basis.

Arbitration Rules and Procedures. To begin arbitration of a claim, either you or LG must make a written demand for arbitration. The arbitration will be administered by the American Arbitration Association ("AAA") and will be conducted before a single arbitrator under the AAA's Consumer Arbitration Rules that are in effect at the time the arbitration is initiated (referred to as the "AAA Rules") and under the procedures set forth in this section. The AAA Rules are available online at www.adr.org/consumer. Send a copy of your written demand for arbitration, as well as a copy of this provision, to the AAA in the manner described in the AAA Rules. You must also send a copy of your written demand to LG at LG Electronics, USA, Inc. Attn: Legal Department- Arbitration 111 Sylvan Avenue, Englewood Cliffs, NJ 07632. If there is a conflict between the AAA Rules and the rules set forth in this section, the rules set forth in this section will govern. This arbitration provision is governed by the Federal Arbitration Act. Judgment may be entered on the arbitrator's award in any court of competent jurisdiction. All issues are for the arbitrator to decide, except that issues relating to the scope and enforceability of the arbitration provision and to the arbitrability of the dispute are for the court to decide. The arbitrator is bound by the terms of this provision.

Governing Law. The law of the state of your residence shall govern this Limited Warranty and any disputes between us except to the extent that such law is preempted by or inconsistent with applicable federal law.

Fees/Costs. You do not need to pay any fee to begin an arbitration. Upon receipt of your written demand for arbitration, LG will promptly pay all arbitration filing fees to the AAA unless you seek more than $25,000 in damages, in which case the payment of these fees will be governed by the AAA Rules. Except as otherwise provided for herein, LG will pay all AAA filing, administration and arbitrator fees for any arbitration initiated in accordance with the AAA Rules and this arbitration provision. If you prevail in the arbitration, LG will pay your attorneys' fees and expenses as long as they are reasonable, by considering factors including, but not limited to, the purchase amount and claim amount. Notwithstanding the foregoing, if applicable law allows for an award of reasonable attorneys' fees and expenses, an arbitrator can award them to the same extent that a court would. If the arbitrator finds either the substance of your claim or the relief sought in the demand is frivolous or brought for an improper purpose (as measured by the standards set forth in Federal Rule of Civil Procedure 11(b)), then the payment of all arbitration fees will be governed by the AAA Rules. In such a situation, you agree to reimburse LG for all monies previously disbursed by it that are otherwise your obligation to pay under the AAA Rules. Except as otherwise provided for, LG waives any rights it may have to seek attorneys' fees and expenses from you if LG prevails in the arbitration.

Hearings and Location. If your claim is for $25,000 or less, you may choose to have the arbitration conducted solely on the basis of (1) documents submitted to the arbitrator, (2) through a telephonic hearing, or (3) by an in-person hearing as established by the AAA Rules. If your claim exceeds $25,000, the right to a hearing will be determined by the AAA Rules. Any in-person arbitration hearings will be held at a

location within the federal judicial district in which you reside unless we both agree to another location or we agree to a telephonic arbitration.

Opt Out. You may opt out of this dispute resolution procedure. If you opt out, neither you nor LG can require the other to participate in an arbitration proceeding. To opt out, you must send notice to LG no later than 30 calendar days from the date of the first consumer purchaser's purchase of the product by either: (i) sending an e-mail to optout@lge.com, with the subject line: "Arbitration Opt Out" or (ii) calling 1-800-980-2973. You must include in the opt out e-mail or provide by telephone: (a) your name and address; (b) the date on which the product was purchased; (c) the product model name or model number; and (d) the serial number (the serial number can be found (i) on the product; or (ii) online by accessing https://www.lg.com/us/support and clicking on "How do I find my model number?").

You may only opt out of the dispute resolution procedure in the manner described above (that is, by e-mail or telephone); no other form of notice will be effective to opt out of this dispute resolution procedure. Opting out of this dispute resolution procedure will not affect the coverage of the Limited Warranty in any way, and you will continue to enjoy the full benefits of the Limited Warranty. If you keep this product and do not opt out, then you accept all terms and conditions of the arbitration provision described above.

CANADA

TERMS AND CONDITIONS

ARBITRATION NOTICE: THIS LIMITED WARRANTY CONTAINS AN ARBITRATION PROVISION THAT REQUIRES YOU AND LG TO RESOLVE DISPUTES BY BINDING ARBITRATION INSTEAD OF IN COURT, UNLESS THE LAWS OF YOUR PROVINCE OR TERRITORY DO NOT PERMIT THAT, OR, IN OTHER JURISDICTIONS, IF YOU CHOOSE TO OPT OUT. FOR FURTHER CLARITY, THIS ARBITRATION PROVISION IS NOT APPLICABLE TO CONSUMERS RESIDING IN ONTARIO, BRITISH COLUMBIA OR QUÉBEC. IN ARBITRATION, CLASS ACTIONS AND JURY TRIALS ARE NOT PERMITTED. PLEASE SEE THE SECTION TITLED "PROCEDURE FOR RESOLVING DISPUTES" BELOW.

QUEBEC ONLY: LG stands behind its products and makes every reasonable effort to ensure its products can be maintained and repaired, as required. You may access the catalogue of available parts and services at https://www.lg.com/ca_en/support/. HOWEVER, LG IN NO WAY GUARANTEES AND MAKES NO REPRESENTATIONS REGARDING THE AVAILABILITY OF ANY SPECIFIC SPARE OR REPLACEMENT PART, REPAIR SERVICE OR INFORMATION OR INSTRUCTIONS FOR SUCH MAINTENANCE AT ANY TIME. LG EXPRESSLY DISCLAIMS ANY GUARANTEE, WARRANTY OR OBLIGATION IN RESPECT OF THAT AVAILABILITY.

Should your LG Dishwasher ("Product") fail due to a defect in materials or workmanship under normal and proper use, during the warranty period set forth below, LG Electronics Canada, Inc. ("LGECI") will, at its option, repair, replace or pro rate the Product upon receipt of proof of the original retail purchase. This limited warranty is valid only to the original retail purchaser of the Product and applies only to a Product distributed, purchased from an authorized retailer and used within Canada, as determined at the sole discretion of LGECI.

WARRANTY PERIOD: (Note: If the original date of purchase can not be verified, the warranty will begin sixty (60) days from the date of manufacture.)		
Dishwasher	Extended Component Warranty (Parts Only) (Consumer will be charged for Labor after One (1) year from the date of purchase.)	
One (1) year from the date of original retail purchase	Two (2) years from the date of original retail purchase	Ten (10) years from the date of original retail purchase
Labor / Parts (internal/functional parts only)	Main control board†, Rack, Stainless Steel Door Liner, Tub	DD Motor

† Main control board is located on the right bottom of the Dishwasher when viewed from the front.

- Replacement products and parts are warranted for the remaining portion of the original warranty period or ninety (90) days, whichever is greater.
- Replacement products and parts may be new, reconditioned, refurbished, or otherwise factory remanufactured, all at the sole discretion of LGECI.
- Proof of original retail purchase specifying the Product model and date of purchase is required to obtain warranty service under this Limited Warranty.

DISCLAIMER:

IF YOU ARE A CONSUMER SUBJECT TO QUÉBEC, BRITISH COLUMBIA OR ONTARIO'S CONSUMER PROTECTION LEGISLATION, THE EXCLUSION OF WARRANTIES CONTAINED IN THIS SECTION DO NOT EXCLUDE OR LIMIT THE RIGHTS AND REMEDIES THAT YOU MAY HAVE UNDER SUCH ACT, INCLUDING THE RIGHT TO MAKE A CLAIM UNDER ANY OF THE STATUTORY WARRANTIES PROVIDED THEREUNDER.

LGECI'S SOLE LIABILITY IS LIMITED TO THE LIMITED WARRANTY SET OUT ABOVE, UNLESS SUCH LIMITATION IS PROHIBITED BY THE LAWS OF THE PROVINCE IN WHICH YOU RESIDE. EXCEPT AS EXPRESSLY PROVIDED ABOVE, OR IF OTHERWISE PROHIBITED BY THE LAW OF THE PROVINCE IN WHICH YOU RESIDE, LGECI DOES NOT MAKE ANY OTHER WARRANTIES OR CONDITIONS RESPECTING THE PRODUCT, AND HEREBY DISCLAIMS, ALL OTHER WARRANTIES AND CONDITIONS RESPECTING THE PRODUCT, WHETHER EXPRESS OR IMPLIED, INCLUDING BUT NOT LIMITED TO, ANY IMPLIED WARRANTY OR CONDITION OF MERCHANTABILITY OR FITNESS FOR A PARTICULAR PURPOSE, AND NO REPRESENTATIONS SHALL BE BINDING ON LGECI. LGECI DOES NOT AUTHORIZE ANY PERSON TO

CREATE OR ASSUME FOR IT ANY OTHER WARRANTY OBLIGATION OR LIABILITY IN CONNECTION WITH THE PRODUCT. TO THE EXTENT THAT ANY WARRANTY OR CONDITION IS IMPLIED BY LAW, IT IS LIMITED TO THE WARRANTY PERIOD SET OUT ABOVE. UNDER NO CIRCUMSTANCES SHALL LGECI, THE MANUFACTURER OR DISTRIBUTOR OF THE PRODUCT, BE LIABLE FOR ANY INCIDENTAL, CONSEQUENTIAL, SPECIAL, DIRECT, INDIRECT, PUNITIVE OR EXEMPLARY DAMAGES, INCLUDING, WITHOUT LIMITATION, LOSS OF GOODWILL, LOST PROFITS, LOSS OF ANTICIPATED PROFITS, LOST REVENUE, LOSS OF USE, OR ANY OTHER DAMAGE, WHETHER ARISING DIRECTLY OR INDIRECTLY FROM ANY CONTRACTUAL BREACH, FUNDAMENTAL BREACH, TORT OR OTHERWISE, OR FROM ANY ACTS OR OMISSIONS. LGECI'S TOTAL LIABILITY, IF ANY, SHALL NOT EXCEED THE PURCHASE PRICE PAID BY YOU FOR THE PRODUCT.

This Limited Warranty gives you specific legal rights. You may also have other rights that vary from province to province depending on applicable provincial laws. Any term of this Limited Warranty that negates or varies any implied condition or warranty under provincial law is severable where it conflicts with such provincial law without affecting the remainder of this warranty's terms.

THIS LIMITED WARRANTY DOES NOT COVER:

- Service trips to i) deliver, pick up, or install or; educate on how to operate the Product; ii) correct wiring or plumbing; or iii) correct unauthorized repairs or installations of the Product;
- Damage or failure of the Product to perform during power failures and interrupted or inadequate electrical service;
- Damage or failure caused by leaky or broken water pipes, frozen water pipes, restricted drain lines, inadequate or interrupted water supply or inadequate supply of air;
- Damage or failure resulting from operating the Product in a corrosive atmosphere or contrary to the instructions outlined in the Product's owner's manual;
- Damage or failure to the Product caused by accidents, pests and vermin, lightning, wind, fire, floods, acts of God, or any other causes beyond the control of LGECI or the manufacturer;
- Damage or failure resulting from misuse, abuse, improper installation, repair, or maintenance of the Product. Improper repair includes use of parts not authorized or specified by LGECI. Improper installation or maintenance includes installation or maintenance contrary to the Product's owner's manual;.
- Damage or failure caused by unauthorized modification or alteration of the Product, or if used for other than the intended household purpose/use of the Product, or damage or failure resulting from any water leakage due to improper installation of the Product;
- Damage or failure caused by incorrect electrical current, voltage or plumbing codes;
- Damage or failure caused by use that is other than normal household use, including, without limitation, commercial or industrial use, including use in commercial offices or recreational facilities, or as otherwise outlined in the Product's owner's manual;
- Damage or failure caused by the use of any accessories, components or cleaning products, including, without limitation, water filters, that are not approved/authorized by LGECI;
- Damage or failure caused by transportation and handling, including scratches, dents, chips and/or other damage to the finish of the Product, unless such damage results from defects in materials or workmanship and is reported to LGECI within one (1) week of delivery of the Products;
- Damage or missing items to any display, open box, refurbished or discounted Product;
- Refurbished Product or any Product sold "As Is", "Where Is", "With all Faults", or any similar disclaimer;
- Products with original serial numbers that have been removed, altered or cannot be readily determined at the discretion of LGECI;
- Increases in utility costs and additional utility expenses in any way associated with the Product;
- Any noises associated with normal operation of the Product;
- Replacement of any part that was not originally included with the Product;
- Replacement of light bulbs, filters, fuses or any other consumable parts;
- Costs associated with removal and/or reinstallation of the Product for repairs; and

- Shelves, door bins, drawers, handle and accessories to the Product, except for internal/functional parts covered under this Limited Warranty.
- Coverage for "in Home" repairs, for products in-warranty, will be provided if the Product is within a 150 km radius from the nearest authorized service center (ASC), as determined by LG Canada. If your Product is located outside a 150 km radius from a ASC, as determined by LG Canada, it will be your responsibility to bring the Product, at your sole expense, to the ASC for in-warranty repair.

All costs and expenses associated with the above excluded circumstances, listed under the heading, This Limited Warranty Does Not Cover, shall be borne by the consumer.

TO OBTAIN WARRANTY SERVICE AND ADDITIONAL INFORMATION, PLEASE CALL OR VISIT OUR WEBSITE:

Call 1-888-542-2623 (8 am - 9 pm EST, 365 days) and select the appropriate option from the menu, or visit our website at http://www.lg.com.

PROCEDURE FOR RESOLVING DISPUTES:

EXCEPT WHERE PROHIBITED AT LAW (INCLUDING WITH RESPECT TO QUÉBEC, BRITISH COLUMBIA AND ONTARIO CONSUMERS), ALL DISPUTES BETWEEN YOU AND LG ARISING OUT OF OR RELATING IN ANY WAY TO THIS LIMITED WARRANTY OR THE PRODUCT SHALL BE RESOLVED EXCLUSIVELY THROUGH BINDING ARBITRATION, AND NOT IN A COURT OF GENERAL JURISDICTION. EXCEPT WHERE PROHIBITED AT LAW (INCLUDING WITH RESPECT TO QUÉBEC, BRITISH COLUMBIA AND ONTARIO CONSUMERS), YOU AND LG BOTH IRREVOCABLY AGREE TO WAIVE THE RIGHT TO A JURY TRIAL AND TO BRING OR PARTICIPATE IN A CLASS ACTION.

Definitions. For the purposes of this section, references to “LG” mean LG Electronics Canada, Inc., its parents, subsidiaries and affiliates, and each of their officers, directors, employees, agents, beneficiaries, predecessors in interest, successors, assigns and suppliers; references to “dispute” or “claim” shall include any dispute, claim or controversy of any kind whatsoever (whether based in contract, tort, statute, regulation, ordinance, fraud, misrepresentation or any other legal or equitable theory) arising out of or relating in any way to the sale, condition or performance of the product or this Limited Warranty.

Notice of Dispute. In the event you intend to commence an arbitration proceeding, you must first notify LG in writing at least 30 days in advance of initiating the arbitration by sending a letter to LGECI Legal Team at 20 Norelco Drive, North York, Ontario, Canada M9L 2X6 (the “Notice of Dispute”). You and LG agree to engage in good faith discussions in an attempt to amicably resolve your claim. The notice must provide your name, address, and telephone number; identify the product that is the subject of the claim; and describe the nature of the claim and the relief being sought. If you and LG are unable to resolve the dispute within 30 days of LG’s receipt of the Notice of Dispute, the dispute shall be resolved by binding arbitration in accordance with the procedure set out herein. You and LG both agree that, during the arbitration proceeding, the terms (including any amount) of any settlement offer made by either you or LG will not be disclosed to the arbitrator until the arbitrator determines the dispute.

Agreement to Binding Arbitration and Class Action Waiver. Upon failure to resolve the dispute during the 30 day period after LG’s receipt of the Notice of Dispute, you and LG agree to resolve any claims between you and LG only by binding arbitration on an individual basis, unless you opt out as provided below, or you reside in a jurisdiction that prevents full application of this clause in the circumstances of the claims at issue (in which case if you are a consumer, this clause will only apply if you expressly agree to the arbitration). To the extent permitted by applicable law, any dispute between you and LG shall not be combined or consolidated with a dispute involving any other person’s or entity’s product or claim. More specifically, without limitation of the foregoing, except to the extent such a prohibition is not permitted at law, any dispute between you and LG shall not under any circumstances proceed as part of a class or representative action. Instead of arbitration, either party may bring an individual action in small claims court, but that small claims court action may not be brought on a class or representative basis except to the extent this prohibition is not permitted at law in your province or territory of jurisdiction as it relates to the claims at issue between you and LG. This does not apply to consumers in Ontario, British Columbia and Québec. In accordance with provincial legislation, the consumer and LG may agree to resolve the dispute using any procedure available, including commencing the action before the competent courts of those provinces.

Arbitration Rules and Procedures. To begin arbitration of a claim, either you or LG must make a written demand for arbitration. The arbitration will be private and confidential, and conducted on a simplified and expedited basis before a single arbitrator chosen by the parties under the provincial or territorial

commercial arbitration law and rules of the province or territory of your residence. You must also send a copy of your written demand to LG at LG Electronics, Canada, Inc., Attn: Legal Department- Arbitration, 20 Norelco Drive, North York, Ontario M9L 2X6. This arbitration provision is governed by your applicable provincial or territorial commercial arbitration legislation. For consumers in Ontario, British Columbia and Québec, the applicable arbitration legislation only applies if consumers agree to submit the dispute to arbitration. Judgment may be entered on the arbitrator's award in any court of competent jurisdiction. All issues are for the arbitrator to decide, except that, issues relating to the scope and enforceability of the arbitration provision and to the arbitrability of the dispute are for the court to decide. The arbitrator is bound by the terms of this provision.

Governing Law. The law of the province or territory of your purchase shall govern this Limited Warranty and any disputes between you and LG except to the extent that such law is preempted by or inconsistent with applicable federal or provincial/territorial law. Should arbitration not be permitted for any claim, action, dispute or controversy between you and LG, you and LG attorn to the exclusive jurisdiction of the courts of the province or territory of your purchase for the resolution of the claim, action, dispute or controversy between you and LG.

Fees/Costs. You do not need to pay any fee to begin an arbitration. Upon receipt of your written demand for arbitration, LG will promptly pay all arbitration filing fees unless you seek more than $25,000 in damages, in which case the payment of these fees will be governed by the applicable arbitration rules. Except as otherwise provided for herein, LG will pay all filing, administration and arbitrator fees for any arbitration initiated in accordance with the applicable arbitration rules and this arbitration provision. If you prevail in the arbitration, LG will pay your attorneys' fees and expenses as long as they are reasonable, by considering factors including, but not limited to, the purchase amount and claim amount. Notwithstanding the foregoing, if applicable law allows for an award of reasonable attorneys' fees and expenses, an arbitrator can award them to the same extent that a court would. If the arbitrator finds either the substance of your claim or the relief sought in the demand is frivolous or brought for an improper purpose (as measured by the applicable laws), then the payment of all arbitration fees will be governed by the applicable arbitration rules. In such a situation, you agree to reimburse LG for all monies previously disbursed by it that are otherwise your obligation to pay under the applicable arbitration rules. Except as otherwise provided for, LG waives any rights it may have to seek attorneys' fees and expenses from you if LG prevails in the arbitration.

Hearings and Location. If your claim is for $25,000 or less, you may choose to have the arbitration conducted solely (1) on the basis of documents submitted to the arbitrator, (2) through a telephonic hearing, or (3) by an in-person hearing as established by the applicable arbitration rules. If your claim exceeds $25,000, the right to a hearing will be determined by the applicable arbitration rules. Any in-person arbitration hearings will be held at the nearest, most mutually-convenient arbitration location available within the province or territory in which you reside unless you and LG both agree to another location or agree to a telephonic arbitration.

Severability and Waiver. If any portion of this Limited Warranty (including these arbitration procedures) is unenforceable, the remaining provisions will continue in full force and effect to the maximum extent permitted by applicable law. Should LG fail to enforce strict performance of any provision of this Limited Warranty (including these arbitration procedures), it does not mean that LG intends to waive or has waived any provision or part of this Limited Warranty.

Opt Out. The arbitration provision requires you and LG to resolve disputes by binding arbitration instead of court, unless the laws of your province or territory do not permit that, or, in other jurisdictions, if you choose to opt out. The arbitration provision does not apply to consumers in Ontario, British Columbia and Québec.

For individuals that fall within the binding arbitration provisions, you may opt out of this dispute resolution procedure. If you opt out, neither you nor LG can require the other to participate in an arbitration proceeding. To opt out, you must send notice to LG no later than 30 calendar days from the date of the first consumer purchaser's purchase of the product by either (i) sending an e-mail to optout@lge.com, with the subject line: "Arbitration Opt Out;" or (ii) calling 1- 800-980-2973. You must include in the opt out e-mail or provide by telephone: (a) your name and address; (b) the date on which the product was purchased; (c) the product model name or model number; and (d) the serial number (the serial number can be found (i) on the product; or (ii) online by accessing https://www.lg.com/ca_en/findmodel_serial/).

In the event that you "Opt Out", the law of the province or territory of your residence shall govern this Limited Warranty and any disputes between you and LG except to the extent that such law is preempted by or inconsistent with applicable federal or provincial/territorial law. Should arbitration not be permitted

for any claim, action, dispute or controversy between you and LG, you and LG agree to attorn to the exclusive jurisdiction of the courts of the province or territory of your residence for the resolution of the claim, action, dispute or controversy between you and LG.

You may only opt out of the dispute resolution procedure in the manner described above (that is, by e-mail or telephone); no other form of notice will be effective to opt out of this dispute resolution procedure. Opting out of this dispute resolution procedure will not affect the coverage of the Limited Warranty in any way, and you will continue to enjoy the full benefits of the Limited Warranty. If you keep this product and do not opt out, then you accept all terms and conditions of the arbitration provision described above.

Conflict of Terms. In the event of a conflict or inconsistency between the terms of this Limited Warranty and the End User License Agreement ("EULA") in regards to dispute resolution, the terms of this Limited Warranty shall control and govern the rights and obligations of the parties and shall take precedence over the EULA.

Warranty Exceptions

Poor wash results caused by debris remaining in the filter.	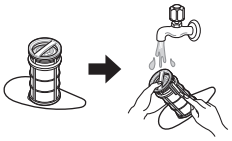	Clean the filter regularly.
Poor wash results caused by improper loading or over stacking: wash arm won't rotate or soap dispenser is held closed.	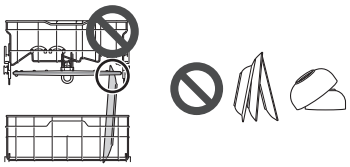	Make certain that no dishes or utensils are in the path of the spray arms. Do not place one dish on top of another.
Poor drying results caused by lack of rinse aid.	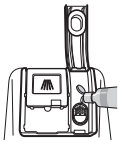	Use rinse aid or combination detergent.
Water is not supplied because the water tap is not turned on. IE error	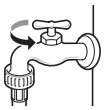	Check and turn on the water tap.
Water is not supplied because the inlet hose is kinked. IE error		Reinstall the inlet hose.
Not draining because drain hose is kinked. OE error	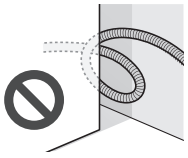	Reinstall the drain hose.
The knockout plug in the garbage disposal is not removed. OE error	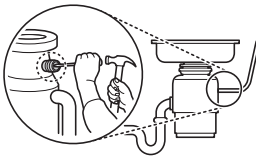	Remove the plug on the disposal.

The disposal or air gap is blocked by debris. OE error	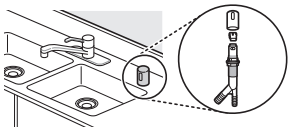	Clean the disposal or the air gap.
Inlet valve and drain hose connection problem caused by improper installation. External leakage		Reinstall the hose.
Door movement or closing compromised by incorrect leveling.	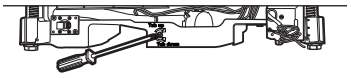	Adjust the lower front leveling feet to the required height.
No power due to loose connection of power supply line or electrical outlet problem.		Reconnect the power supply line or repair the electrical outlet.
Pick-up, electrical wiring, plumbing. Installation		You will be charged for the installation.

Memo

Memo

Memo



LG Customer Information Center	Centro de Información al Cliente LG	Centre de Service à la Clientèle de LG
For inquiries or comments, visit **www.lg.com** or call:	Para consultas o comentarios, visite **www.lg.com** o llame por teléfono:	Pour des questions ou des commentaires, visitez **www.lg.com/ca_fr** ou appelez :
1-800-243-0000 U.S.A.	1-800-243-0000 EE.UU.	1-800-243-0000 ÉTATS-UNIS
1-888-542-2623 CANADA	1-888-542-2623 CANADÁ	1-888-542-2623 CANADA
Register your product Online!	**¡Registre su producto en línea!**	**Enregistrez votre produit en ligne!**
www.lg.com	www.lg.com	www.lg.com/ca_fr