HOME SOLUTIONS - LAUNDRY

DLE3420W/ DLG3421W

7.4 cu. ft. Ultra Large High Efficiency Control Dryer™, Electric Dryer

KEY FEATURES

- 7.4 cu.ft. Capacity
- AI Dry
- Sensor Dry
- FlowSense™ Duct Clogging Indicator
- Aluminized Alloy Steel Drum
- LoDecibel™ Quiet Operation



AVAILABLE COLORS

WHITE

ENERGY STAR

SMART APPLIANCE

ThinQ Care

Proactive Smart Alerts to Keep Your Appliances Running Smoothly

- Preventative Alerts help you stay a step ahead of potential issues to find proactive solutions before problems arise.
- Avoid preventable repairs and service calls with real-time diagnostics for a hassle-free experience.
- Integrated within LG's ThinQ app—a smart home hub for managing your smart devices and appliances.

PRODUCT FEATURES

SUMMARY	
Type	Front Load Dryer
Vent Type	Vented
Dryer Type	Electric / Gas
Capacity	7.4 cu. ft.
Matching Washer	WM3420CW
Sensor Dry	Yes
Steam	No
Colors	White (W)
DRYER PROGRAMS	
No. of Programs	10
	Normal, Heavy Duty, Bedding, Towels, Perm. Press, Delicates, Quick Dry (Manual Dry) AI Dry, Downloaded
No. of Options	7
	Wrinkle Care, Energy Saver, Remote Start, Signal, Control Lock, Wi-Fi, Damp Signal
Temperature Setting	High, Med. High, Medium, Med. Low, Low
Drying Levels	Very, More, Normal, Less, Damp
Manual Dry Times	60 min., 50 min., 40 min., 30 min., 20 min.
APPEARANCE	
Control & Display	Electronic Control Panel with LED Display
Touch Buttons	Yes
Dial-A-Cycle®	Yes
FABRIC CARE FEATURES	
AI Sensor Dry	Yes
Sensor Dry	Yes
Precise Temperature Control with Variable Heater	Yes
Precise Temperature Control with Variable Compressor	No
Steam	No

CONVENIENCE FEATURES	
3 Minute Installation Check	Yes
End of Cycle Signal	Yes
Drum Light (door open)	No
Reversible Door	Yes
FlowSense® Duct Clogging Indicator	Yes
Wrinkle Care Option	Yes
Control Lock	Yes
Venting Option	Electric: 4 Way Venting Gas: 3 Way Venting
4 Adjustable Legs	Yes
Remaining Time Display/ Status Indicator(s)	Yes
SMART FEATURES (ThinQ® TECHNOLOGY)	
Smart Diagnosis (v3.0)	Yes
Wi-Fi	Yes
NFC Tag On Technology	No
ThinQ Care (Remote Start/ Cycle Monitor)	Yes
Energy Monitoring	Yes
ENERGY	
ENERGY STAR® Certified	Yes
CEF	Electric: 3.94 Gas: 3.49
MATERIALS	
Aluminized Alloy Steel Drum	Yes
NeveRust® Stainless Steel Drum	No
Cabinet	Painted Steel
Door	Round White Trim
All Available Colors	White (W)

POWER SOURCE	
Ratings	CSA Listed
Electrical Requirements	Electric: 120/240V, 60Hz, 26A (120/208V, 60Hz, 23A) Gas: 120V, 60Hz, 5Amps
Type	Electric/ Gas
Plug	Electric: Not Included Gas: Included
Plug Type	Electric: 4-Wire or 3-Wire (Homes built after 1996 require 4-Wire) Gas: 3 Prong
BTU Rating	Electric: N/A Gas: 20,000
OPTIONS	
LP Conversion Kit	Eletric: N/A Gas: 383EEL3002R
Side Venting Kit	383EEL9001B
Drying Rack	3750EL1001A
Pedestal	WDP6W
Pedestal (WxHxD)	27" x 13 5/8" x 28" (43 7/8" D with door open)
LIMITED WARRANTY	
Parts & Labor	1 Year
Drum	3 Years
UPC CODES	
DLE3420W (Electric)	048231349901
DLG3421W (Gas)	048231349918

© 2025 LG Electronics USA, Inc. All rights reserved. "LG Life's Good" is a registered trademark of LG Corp. All other product and brand names are trademarks or registered trademarks of their respective owners. Design, features and specifications are subject to change without notice. Non-metric weights and measurements are approximate. Some features may require Internet access. Content and services may vary by product and are subject to change without notice. 12/9/25

DLE3420W/ DLG3421W

DIMENSION / CLEARANCES



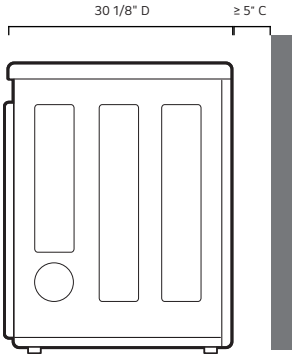

DIMENSIONS	
Product (WxHxD)	27'' X 39" X 30 1/8''
Depth with Door Open	51 3/8"
Carton (WxHxD)	29" x 43 1/4" x 31 3/8"
Weight (Product)	Electric: 120.15 lbs / Gas: 123.02 lbs
Weight (Carton)	Electric: 122.4 lbs / Gas: 124.9 lbs

DIMENSION / CLEARANCES

CLOSET VENTILATION REQUIREMENTS

Closets with doors must have both an upper and lower vent to prevent heat and moisture buildup in the closet. One upper vent opening with a minimum opening of 48 sq. in. (310 cm2) must be installed no lower than 6 feet above the floor. One lower vent opening with a minimum opening of 24 sq. in. (155 cm2) must be installed no more than one foot above the floor. Install vent grilles in the door or cut down the door at the top and bottom to form openings. Louvered doors with equivalent ventilation openings are also acceptable.

DIMENSION / CLEARANCES

Installation Spacing for Recessed Area or Closet, with Stacked Washer and Dryer

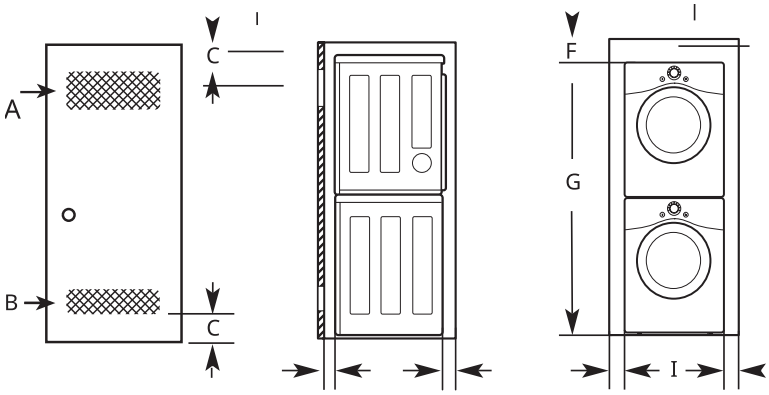

DIMENSIONS		
A	Upper Ventilation Opening	≥ 48 sq. in. (310 cm2)
B	Lower Ventilation Opening	≥ 24 sq. in. (155 cm2)
C	Distance to Ventilation Opening	≥ 3" (76 mm)
D	Front Clearance	≥ 1" (25 mm)
E	Back Clearance	≥ 5 1/2" (140 mm)
F	Top Clearance to the Ceiling	≥ 6" (152 mm)
G	Height to the Top of Stacked Appliances†	77 1/2" (1968 mm)
H	Side Clearance	≥ 1" (25 mm)
I	Width	27" (686mm)

DIMENSION / CLEARANCES

Installation Spacing for Recessed Area or Closet Installation

These clearance are recommended for this dryer.

- Additional clearance should be considered for ease of installation and servicing.
- Additional clearance should be considered on all sides of the dryer to reduce noise transfer.

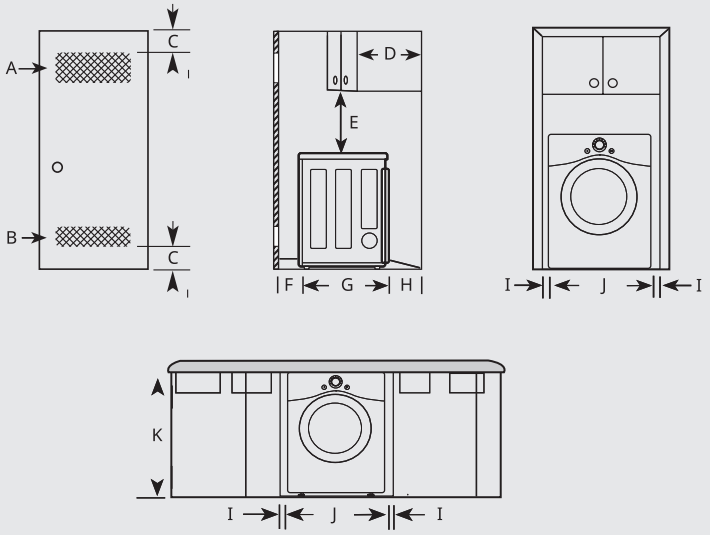

DIMENSIONS		
A	Upper Ventilation Opening	≥ 48 sq. in. (310 cm2)
B	Lower Ventilation Opening	≥ 24 sq. in. (155 cm2)
C	Distance to Ventilation Opening	≥ 3" (76 mm)
D	Overhead Cabinet Depth	≤ 14" (356 mm)
E	Distance to the Overhead Cabinet / Shelf	≥ 18" (457 mm)
F	Front Clearacne	1" (25 mm)
G	Depth	30 1/8" (765 mm)
H	Back Clearance	≥ 5" (127 mm)
I	Side Clearance	≥ 1" (25 mm)
J	Width	27" (686 mm)
K	Height of Cabinet Opening	39" (990 mm)

LEVELING THE APPLIANCE

CHECKING THE LEVEL

Position the appliance in the final location and place a level across the top of the appliance.

1. Level
2. Level Feet

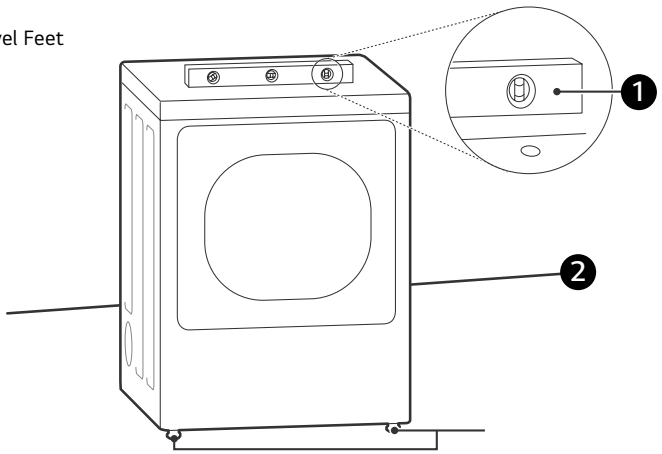

© 2025 LG Electronics USA, Inc. All rights reserved. "LG Life's Good" is a registered trademark of LG Corp. All other product and brand names are trademarks or registered trademarks of their respective owners. Design, features and specifications are subject to change without notice. Non-metric weights and measurements are approximate. Some features may require Internet access. Content and services may vary by product and are subject to change without notice. 12/9/25