Miele

Operating and Installation Instructions
Washer



To prevent accidents and appliance damage, read these instructions **before** installation or use.

en-CA, US

M.-Nr. 12 964 700

Contents

Caring for the environment **4**

Environmentally friendly washing . **5**
Energy and water consumption 5
Detergent consumption 5

IMPORTANT SAFETY INSTRUCTIONS **6**

Guide to the washer **10**
Control panel 10
How the control field works 11

Before using for the first time **12**

1. Prepare the laundry **16**

2. Selecting a program **17**

3. Loading the washing machine .. **18**

4. Selecting program settings **19**

5. Adding detergent **20**

6. Starting a program **23**
Adding laundry during a program sequence (AddLoad) 23

7. Program end **24**

Spin cycle **25**

Delay start/SmartStart **26**

Program guide **28**

Extra options **31**
Lightly soiled 31
Heavy soiled 31
SoftSteam 31
Buzzer 31
The following extra options can be selected in addition to the programs 31

Program sequence **32**

Changing the program sequence . **34**
Changing a program (safety lock) ... 34
Canceling a program 34

Detergent **35**
Detergents recommended 35

Cleaning and care **36**
Cleaning the housing and control panel 36
Cleaning the detergent dispensing drawer 36
Cleaning the water-inlet filter 39

Frequently asked questions **40**
A wash program cannot be started . 40
The program is canceled and a fault indicator light lights up on the control field 40
During the program sequence, a symbol appears on the time display 41
At the end of the program, an indicator light lights up on the control field 42
General problems with the washer . 43
Poor wash results 44
The drum door cannot be opened ... 45
Opening the door in the event of a blocked drain outlet and/or power outage 46

Customer Service **48**
Contact in the event of a fault 48
Optional accessories 48
Appliance warranty and product registration 48

Installation **49**
Front view 49
Rear view 50
Installation surface 51
Transporting the washing machine to its installation site 51
Removing the transport safety device 51
Installing the shipping struts 52
Leveling the machine 53
Additional installation requirements 54

The water protection system 57
Connecting water inlet hoses 000
Water intake 57
Water drainage..... 58
Connecting the hoses to the drain adapter 58
Electrical connection 61

Technical data **62**

Programmable functions **63**
Choosing and selecting programmable functions 63
Editing and saving the programmable function 64
Exiting the programming level 64
P11 Buzzer duration..... 64
P12 Buzzer 64
P13 Keypad tone 65
P14 PIN code 65
P22 Control field switch-off status . 65
P24 Memory..... 66
P25 Water intake 66
P28 Gentle action..... 66
P29 Reducing the temperature..... 66
P32 Maximum rinse level..... 67
P33 Suds cooling..... 67
P34 Anti-crease..... 67
P49 Low water pressure..... 67
P55 Chlorine bleach 68
P62 Display brightness dimmed 68
P63 Welcome tone 68
P90 Operating hours 68
P00 Factory default 68
Networking 69
P97 Remote control..... 69
P98 SmartGrid 69
P99 RemoteUpdate..... 69
Switching off WiFi 71
Copyrights and licenses for the communication module..... 71

Caring for the environment

Disposal of the packing material

The cardboard box and packing materials protect the appliance during shipping. They have been designed to be biodegradable and recyclable.

Ensure that any plastic wrappings, bags, etc. are disposed of safely and kept out of the reach of children. Danger of suffocation!

Disposal of your old appliance

Electrical and electronic appliances contain valuable materials. They also contain certain substances, compounds and components which were essential for the proper functioning and safe use of the equipment. Handling these materials improperly by disposing of them in your household waste can be harmful to your health and the environment. Therefore, please do not dispose of your old appliance with regular household waste and follow local regulations on proper disposal.



Consult with local authorities, dealers or Miele in order to dispose of and recycle electrical and electronic appliances. Miele assumes no responsibility for deleting any personal data left on the appliance being disposed. Please ensure that your old appliance is kept away from children until removal. Observe safety requirements for appliances that may tip over or pose an entrapment hazard.

Energy and water consumption

- Make use of the maximum load that the wash program can accommodate. This will keep the energy and water consumption to a minimum in relation to the size of the load.
- When smaller amounts of laundry are washed, the washing machine's automatic load control system will reduce the amount of water and energy used.
- Use the *Express* program for small, lightly soiled loads.
- Modern detergents make it possible to wash at lower temperatures. Using the corresponding temperature settings will save energy.
- Washing at low temperatures and/or using liquid detergents can cause bacteria and odors to build up in the washing machine. Miele therefore recommends cleaning the washing machine once every month.

  When the **i** indicator light lights up on the control field and *1* appears on the time display, the washing machine must be cleaned.

Detergent consumption

- Do not exceed the amounts of detergent recommended on the packaging.
- Adjust the dosage to the level of soiling of the laundry.
- Reduce the amount of detergent with smaller loads (approx. ⅓ less than the amount recommended can be used when washing a half load).
- Only use highly efficient detergent with the following label:



When drying with a tumble dryer

Select the highest possible spin speed for the wash program to save energy in the subsequent tumble dryer cycle.

IMPORTANT SAFETY INSTRUCTIONS

⚠ WARNING

To reduce the risk of fire, electric shock or injury to persons while using your appliance follow basic safety precautions, including the following:

▶ Read all instructions before using the appliance.

▶ GROUNDING INSTRUCTIONS

This appliance must be grounded. In the event of a malfunction or breakdown, grounding will reduce the risk of electric shock by providing a path of least resistance for electric current. This appliance is equipped with a cord having an equipmentgrounding conductor and a grounding plug. The plug must be plugged into an appropriate outlet that is properly installed and grounded in accordance with all local codes and ordinances.

▶ WARNING - Improper connection of the equipment-grounding conductor may result in a risk of electric shock. Check with a qualified electrician if you are in doubt as to whether the appliance is properly grounded.

▶ Do not modify the plug provided with the appliance - if it will not fit the outlet, have a proper outlet installed by a qualified electrician.

▶ Do not install or use a washer with visible damage.

▶ Do not install or store this appliance where it will be exposed to the weather.

▶ Do not install your washing machine where temperatures below freezing may occur. Frozen hoses may burst under pressure. The reliability of the electronic control unit may be impaired at temperatures below freezing.

▶ Before connecting the machine, ensure that the connection data on the data plate (fusing, voltage and frequency) match the mains electrical supply. If in doubt contact an electrician.

▶ Do not use an extension cord to connect this appliance to the power supply. Extension cords do not guarantee the required safety of the appliance (e.g. danger of overheating).

▶ This appliance is not designed for maritime use or for use in mobile installations such as recreational vehicles or aircraft. However, under certain conditions it may be possible for an installation in these applications. Please contact the Miele Service Dept. with specific requirements.

▶ Do not repair or replace any part of the appliance or attempt any servicing unless specifically recommended in these operating instructions.

▶ If the power cord is damaged it must only be replaced by a Miele Service technician with a genuine Miele power cord.

▶ Under certain conditions, hydrogen gas may be produced in a hot water system that has not been used for 2 weeks or more. HYDROGEN GAS IS EXPLOSIVE. If the hot water system has not been used for such a period, turn on all hot water faucets and let the water flow from each for several minutes before using the washing machine. This will release any built-up hydrogen gas. Do not smoke or use an open flame during this time, the gas is flammable.

▶ Before the appliance is removed for service or discarded, remove the door.

Use

▶ Do not allow children to play on or in the appliance. Close supervision is necessary when the appliance is used near children.

▶ The drum door glass will be hot when washing at very high temperatures. Do not touch the glass. Danger of burns! Keep children away from the washer when in use.

▶ Only use the washing machine to wash items which are specified by the manufacturer to be machine washable on the fabric care label. Any other applications may be dangerous.

▶ Do not wash articles that have been previously cleaned, washed, soaked or spotted with gasoline, dry-cleaning solvents or other flammable substances. These articles give off vapors that could ignite or explode. Do not add these items to the wash load.

▶ Do not add gasoline, dry-cleaning solvents, or other flammable or explosive substances to the wash water. These substances give off vapors which could ignite or explode.

▶ Do not use cleaning solvents on or near the machine or the controls. Contact with cleaning solvents will damage the surface..

▶ Do not reach into the appliance if the drum is moving.

▶ Do not tamper with the controls.

IMPORTANT SAFETY INSTRUCTIONS

SAVE THESE INSTRUCTIONS

▶ Miele tumble dryers and Miele washing machines can be installed as a washer-dryer stack. A Miele washer-dryer stacking kit is required as an optional accessory for this. Please ensure that the washer-dryer stacking kit is suitable for the Miele tumble dryer and the Miele washing machine.

▶ If installing the machine on a Miele plinth (available as an optional accessory), please make sure you order the correct one for this washing machine.

▶ Should detergent enter the eyes, rinse out immediately with plenty of lukewarm water. If accidentally ingested, seek medical advice immediately. People who have sustained damage to the skin or who have sensitive skin should avoid contact with the detergent.

▶ Be careful when opening the door following use of the steam function. There is a danger of burning due to escaping steam and the high temperature of the surface of the drum as well as the porthole glass. Step back and wait until the steam has dissipated.

▶ The maximum dry laundry weight is 17.6 lb (8 kg). See the "Program guide" for the maximum recommended loads for individual programs.

▶ Temporary or permanent operation on an autonomous power supply system or a power supply system that is not synchronized with the grid power supply (e.g., island networks, back-up systems) is possible. A prerequisite for operation is that the power supply system complies with national and local codes.
The function and operation of the protective measures provided in the domestic electrical installation and in this Miele product must also be maintained in isolated operation or in operation that is not synchronized with the grid power supply, or these measures must be replaced by equivalent measures in the installation.

FCC Declaration of Conformity

▶ These devices comply with FCC Rules Part 15. This equipment has been tested and found to be in compliance with the limits for a Class B digital device, pursuant to Part 15 of the FCC Rules of Operation and is subject to the following conditions:
These devices may not cause harmful interference.
These devices must accept any interference received, including interference that may cause undesired operation.

FCC Radiation Exposure Statement

▶ This equipment complies with FCC radiation exposure limits set forth for an uncontrolled environment. This equipment should be installed and operated with minimum distance 8" (20 cm) between the radiator and your body.

Industry Canada Statement

▶ This digital apparatus does not exceed the Class B limits for Radio Noise Emissions from digital apparatus set out in the Radio Interference Regulations of the Canadian Department of Communications.

Complies with Canadian ICES-003 Class B specifications.

California Proposition 65

⚠ WARNING

This product can expose you to chemicals mineral oils[1], Nickel (Metallic)[1], Diisononyl phthalate (DINP)[1] and Di-isodecyl phthalate (DIDP)[2], which are known to the State of California to cause [1]cancer and [2]birth defects or [2]other reproductive harm.

For more information go to www.P65Warnings.ca.gov.

Guide to the washer

Control panel

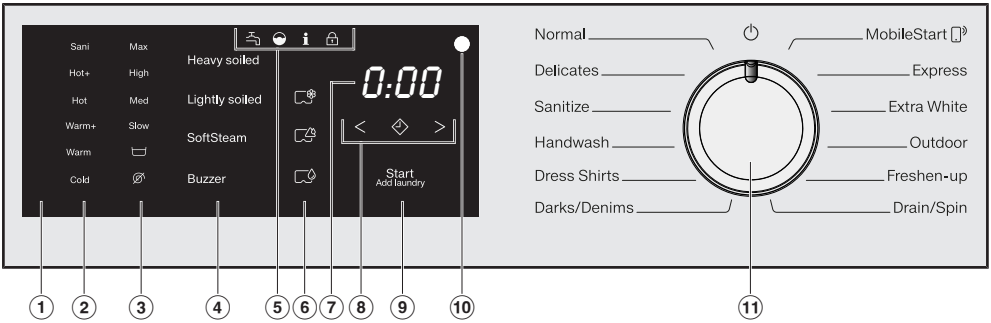

① **Control field**
The control field consists of a time display and various sensor buttons. The individual sensor buttons are explained in the following sections.

② **Temperature sensor buttons**
for selecting the temperature.

③ **Spin speed sensor buttons**
for selecting the final spin speed.

④ **Sensor buttons for extra options**
You can supplement the wash programs with extra options.
If a wash program has been selected, the sensor buttons for the possible extras light up dimly.

⑤ **Indicator lights**

Lights up if there are faults affecting the water intake and drainage.

Lights up if excess detergent was used.

Lights up together with *1* in the time display as a reminder about hygiene information.

The *Add laundry* function cannot be selected.

⑥ **CapDosing sensor buttons**

CapDosing of fabric-care products (e.g., fabric softener, proofing agent)

CapDosing of additives (e.g., detergent enhancers)

CapDosing of detergent (for the main wash only)

⑦ **Time display**
After the program has started, the program duration will appear on the display in hours and minutes.
When Delay Start is being used, the program duration will appear after the delay-stat period has elapsed.

⑧ < ⏲ > **sensor buttons**
The delay-start period selected will appear on the time display.
After the program has started, the delay-start period will begin to count down.
Once the delay-start period has elapsed, the program begins and the estimated program duration appears on the time display.

⏲ After touching the ⏲ sensor button, a later start time for the program (Delay Start) can be selected. Once selected, ⏲ lights up brightly.

> The duration of the delay-start period is increased by touching the > sensor button.

< The duration of the delay-start period is reduced by touching the < sensor button.

⑨ **Start/Add laundry sensor button**

Ⓐ The program can be started as soon as the sensor button is flashing on and off. Touching the *Start/Add laundry* sensor button starts the selected program. The sensor button lights up constantly.

Ⓑ Once the program has been started, the *Start/Add laundry* sensor button allows you to add laundry.

⑩ **Optical interface**
This is used by the Service department as a transmission point.

⑪ **Program selector**
for selecting programs and for switching the machine off. The washing machine is switched on when you select a program, and switched off by turning the program selector to the ⏻ position.

How the control field works

The ②, ③, ④, ⑥, ⑧, and ⑨ sensor buttons react to fingertip contact. Selection is possible as long as the respective sensor button is lit.

If a sensor button is brightly lit, this means it is currently selected

If a sensor button is dimly lit, this means it can be selected

⚠ Damage from incorrect installation and connection.
Installing and connecting the washing machine incorrectly will cause serious damage to property.
See “Installation”.

Removing the protective film and stickers

■ Remove:

- any protective film from the door
- any stickers from the front and from the lid

Please do not remove any labels (e.g., the data plate) which are visible when you open the door.

Remove the drain hose elbow from the drum

An elbow piece for the drain hose is stored in the drum.

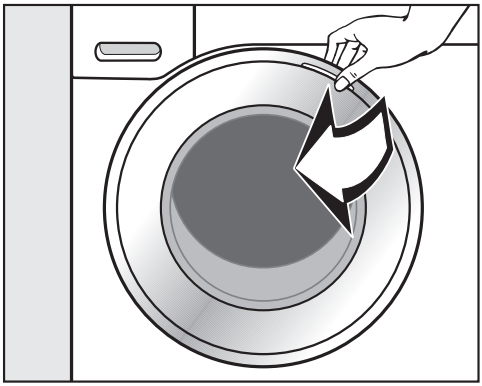

■ Pull open the door.

■ Remove the elbow piece.

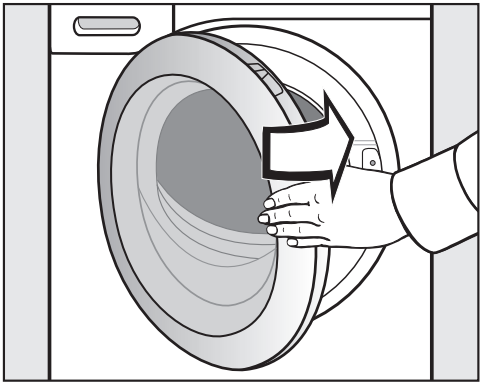

■ Shut the door.

This washing machine has undergone a complete functional test at the factory and some residual water will therefore remain in the drum from this process.

1. Removing the shipping struts

⚠ Damage resulting from failure to remove the shipping struts.

Failure to remove the shipping struts can result in damage to the washing machine and to adjacent cabinetry or appliances.

Remove the shipping struts as described in “Installation and connection”.

Networking

Your washing machine is equipped with an integrated Wi-Fi module. The Wi-Fi module makes it possible to connect to your home network and to use the Miele app on a mobile device.

Once your washing machine has been connected via Wi-Fi, the connection is automatically re-established every time it is switched on.

Make sure that your Wi-Fi network signal is strong enough in the place where you intend to install your washing machine.

Connecting your washing machine to your Wi-Fi network will increase energy consumption, even when the machine is switched off.

Smart Extras via the Miele app*

Networking via the Miele app gives you access to numerous Smart Extras, including:

- Access status information.
- Use additional helpful functions.
- Keep your washing machine up to date with the latest Miele developments via software updates.

You can find more detailed information about Smart Extras on the Miele website, in the Apple App Store®, or in the Google Play Store™.

*This is a separate digital offer from Miele & Cie. KG. The range of functions can vary depending on the model and the country. Acceptance of the General Terms and Conditions and Privacy Policy for Miele digital products and services in the Miele app required. Miele reserves the right to change or discontinue the digital offers at any time.

Requirements for networking

Note the following requirements for networking:

1. A home network is available at the installation site.
   Have the Wi-Fi password ready.
2. The Miele app is available on a mobile device.
3. You have a user account in the Miele app.

Miele App

The Miele App is available to download free of charge from the Apple App Store® or from the Google Play Store™.

Download on the App Store

ANDROID APP ON Google Play

2. Setting up Miele@home

There are 2 ways of connecting:

1. via the Miele app (default)
2. via WPS
   To do so, you will need a WPS-compatible router.

Logging in via the Miele app

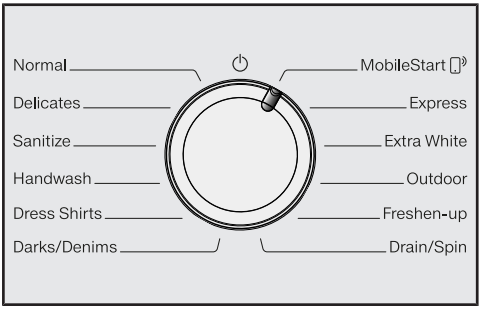

- Turn the program selector to the *MobileStart* program.

APP appears on the time display and the timeout starts to count down from 10 minutes. The Miele app will guide you through the remaining steps.

When you have successfully connected, *Con* will appear on the time display.

Logging in via WPS

- Turn the program selector to the *MobileStart* program.
- Touch the sensor button until *WPS* appears on the time display and a short keypad tone sounds.

The timeout then starts to count down from 2 minutes on the time display.

- Activate the WPS function on your router within 2 minutes.

When you have successfully connected, *Con* will appear on the time display.

Tip: If the connection has not been set up when the timeout has finished counting down, repeat the process.

3. Starting the calibration program

For optimum water and energy consumption and excellent wash results, it is important to calibrate the washing machine.

To do this, the *Normal* program **must** be run without laundry and without detergent.

- Turn on the faucet.

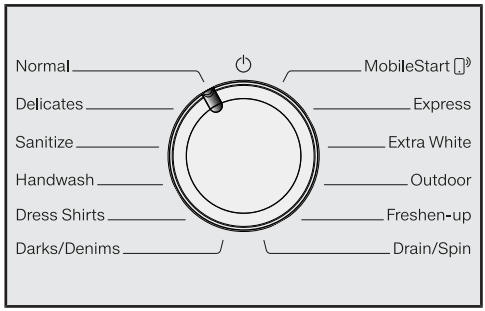

- Turn the program selector to the *Normal* position.

The washing machine is now switched on and the temperature *Warm+* and spin speed *Max* light up.

- Touch the *Start/Add laundry* sensor button.

The wash program will start.

After 15 minutes, the indicators dim.

Opening the door at the end of the program

The door remains locked during the Anti-crease phase. The control field lights up for the first 10 minutes. The control field then goes out and the *Start/Add laundry* sensor button flashes.

- Turn the program selector to the ⏻ position.

-0- appears on the time display and the 🔓 indicator light goes out.

The door will be unlocked.

Tip: After the Anti-crease phase, the washing machine will have switched off and the door unlocked automatically. The control field is completely dark.



- Take hold of the door and pull it open.

Tip: Leave the door slightly open to allow the drum to dry.

The appliance is now ready for use.

1. Prepare the laundry

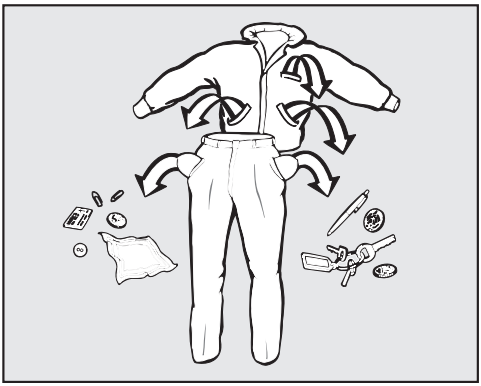

- Empty all pockets.

⚠ Damage due to foreign objects.
Nails, coins, paper clips, and so on can cause damage to garments and components in the machine.
Check the laundry before washing and remove any such foreign objects.

Sort the laundry

Only wash items that are labeled machine washable by the manufacturer. Most garments have a fabric care label in the collar or side seam.

- Sort the laundry by care label and color.

Tip: Dark fabrics often bleed the first few times they are washed. They should be washed separately several times before being included in a mixed load.

Pre-treating stains

- Badly soiled areas and stains should be cleaned as soon as possible, preferably while still fresh. Stains should be carefully dabbed off using a soft cloth. Do not rub!

Tip: Stains (such as blood, egg, coffee, and tea) can be pre-treated using some handy tricks which can be found in the Miele guide to laundry care. Please contact Miele directly or submit a request via Internet page to obtain or view a copy of this manual.

⚠ Damage due to solvent-based cleaning agents
Cleaning agents containing benzine, stain remover, etc., can damage plastic parts.
When pre-treating a stain, make sure that plastic parts do not come into contact with cleaning agents.

⚠ Risk of explosion due to solvent-based cleaning agents.
When using solvent-based cleaning agents, an explosive mixture may develop.
Never use solvent-based cleaning agents in the washing machine.

General tips

- Curtains: Remove any lead weights or strips before washing.
- Loose bra underwires should be removed or sewn in place before washing.
- Close zippers, hooks and eyelets before washing.
- Comforter covers and pillowcases should be fastened to prevent small items from rolling inside of them.

Do not wash items with the ☒ symbol on the fabric care label.

Switching on the washing machine

■ Turn the program selector to a program.

1. Selecting wash programs using the program selector

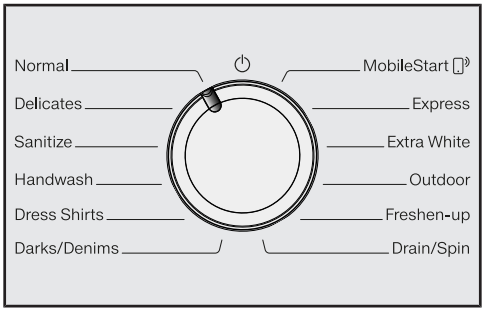

■ Turn the program selector to the required program.

The program duration appears on the time display.

2. Selecting programs via the MobileStart program selector position and the Miele app

Tip: To use *MobileStart*, the washing machine must be logged on to the WiFi network and *Remote control* must be switched on.

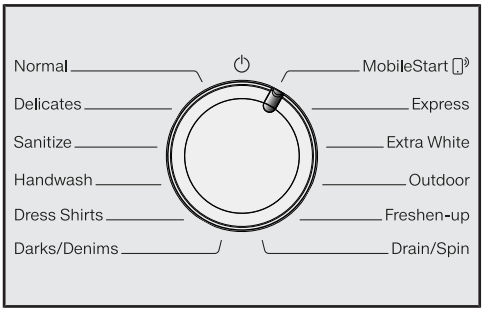

■ Turn the program selector to the *MobileStart* position.

Con appears on the time display.

Once the program has started, the washing machine can be operated with the Miele app.

3. Loading the washing machine

Opening the door

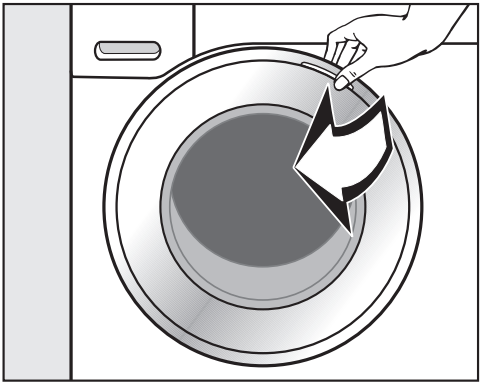

■ Take hold of the door and pull it open.

Check the drum for pets or foreign objects before loading it with laundry.

The most efficient use of energy and water is achieved when a full load is washed. However, do not overload as this reduces cleaning efficiency and causes creasing.

■ Unfold the laundry and load loosely in the drum.

Mixing both large and small items gives better wash results and also helps distribute the load evenly during spinning.

Tip: Please note the maximum load for different wash programs.

Closing the door

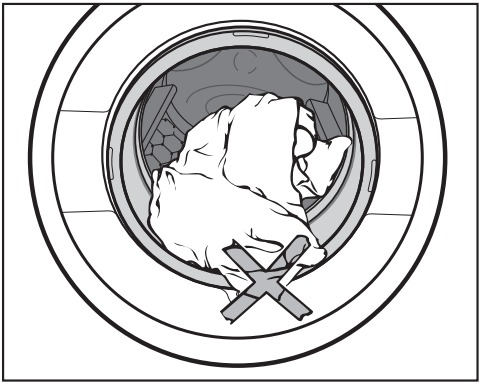

■ Make sure that no items are caught between the door and the seal.

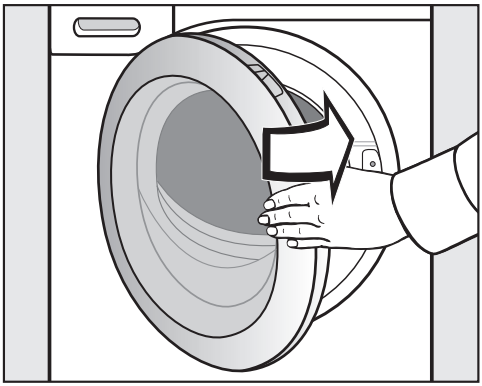

■ Shut the door with a gentle swing.

Selecting a temperature and spin speed

The wash program's pre-set temperature and spin speed light up brightly. The choice of temperatures and spin speeds selectable for the wash program light up dimly.

The temperatures reached inside the washing machine might not be the same as the temperatures selected. Perfect wash results are achieved through a combination of energy use and wash duration.



- Touch the sensor button for the temperature desired. It will then light up brightly.
- Touch the sensor button for the spin speed desired. It will then light up brightly.

Selecting extra options

The selection of extra options available for the wash program lights up dimly.

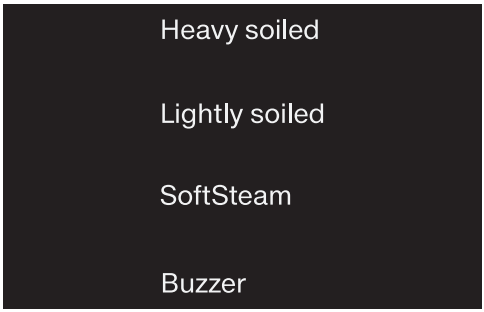

- Touch the sensor button for the required extra option. It will then light up brightly.

Tip: You can select multiple extra options for a wash program.

Please refer to "Extra options" for more information.

Switching on Delay Start/ SmartStart

The start of the program can be delayed from 30 minutes up to 24 hours. This allows you to make use of night-time economy electricity rates, for example (see "Delay Start/SmartStart").

5. Adding detergent

There are several options for adding detergent to the washing machine.

Adding detergent

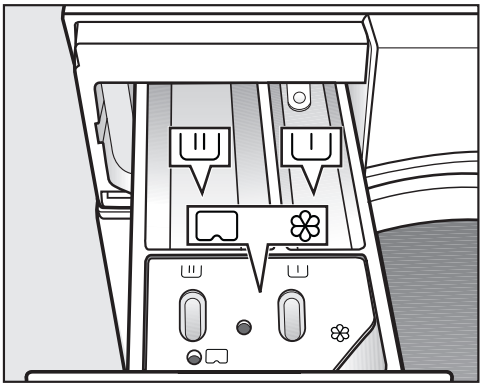

■ Pull out the detergent drawer and fill the detergent into the chambers.

I Detergent for the prewash

II Detergent for the main wash

❀ Fabric softener, liquid starch or caps

Adding fabric softener

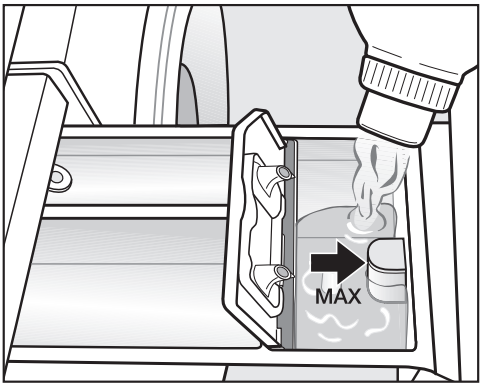

■ Add the fabric softener or the liquid starch to the ❀ compartment. **Do not exceed the maximum level mark.**

It will be automatically dispensed in the final rinse cycle. At the end of the program, a small amount of water remains in the ❀ compartment.

If starching frequently, clean the dispenser compartment, especially the siphon, regularly.

CapDosing

Three different types of capsule are available:

- = Fabric care (e.g., fabric softener, proofing agent)
- = Additives (e.g., detergent enhancers)
- = Detergent (for the main wash only)

Each capsule contains the correct amount for one wash cycle.

Capsules are available to order from Miele's online store, Miele customer service, or your Miele dealer.

⚠ Capsules pose a health risk.
The ingredients of capsules can be hazardous to health if they are swallowed or come into contact with skin.
Keep capsules out of the reach of children.

Switching on CapDosing

■ Touch the sensor button for the capsule you want to use.

Sensor button		Capsule
	for	
	for	
	for	

Inserting a capsule

■ Open the detergent dispenser drawer.

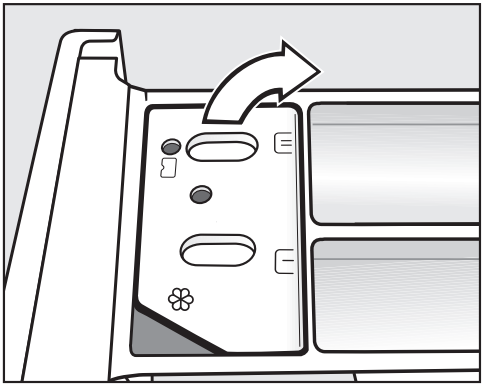

■ Open the lid of the /▭ compartment.

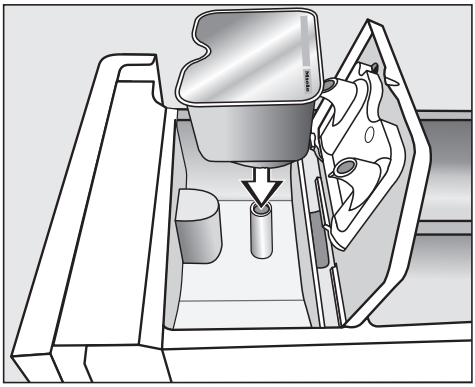

■ Press the capsule in firmly.

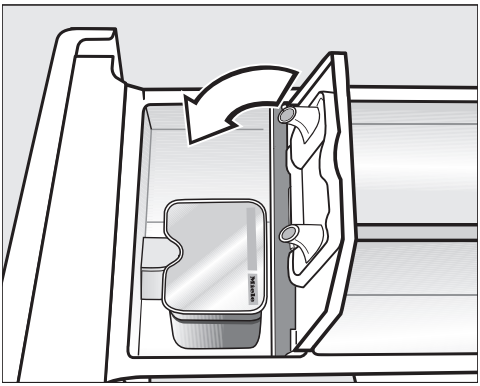

- Close the lid and press it firmly shut.
- Close the detergent dispenser drawer.

The capsule is opened by the act of inserting it in the detergent dispenser drawer. The contents can run out of the capsule if you then remove it from the drawer before it is used.
Dispose of opened capsules.

The contents of the capsule will be added to the wash program at the correct time.

During CapDosing, water intake to the ❀ compartment takes place solely via the capsule.
Do not add any additional fabric softener to the ❀ compartment.

- Remove the empty capsule at the end of the wash program.

For technical reasons, a small amount of water will remain in the capsule.

Switching off/Changing CapDosing

- In order to switch off CapDosing, touch the brightly lit sensor button.
- In order to change CapDosing, touch one of the other capsule sensor buttons.

Tips for dispensing

Adjust the detergent dosage to the level of soiling of the laundry and the maximum load. Reduce the amount of detergent with smaller loads (e.g., reduce the amount of detergent by ⅓ when washing a half load).

Too little detergent:

- The laundry is not cleaned properly and may become gray and hard to the touch over time.
- Can lead to a build-up of bacteria in the washing machine.
- Grease is not completely removed from the laundry.
- Can lead to limescale deposits on the heater elements.

Too much detergent

- Poor wash, rinse, and spin results.
- Causes higher water consumption as an extra rinse cycle is automatically activated.
- A greater burden on the environment.

Starting a program



- Touch the flashing *Start/Add laundry* sensor button.

The door will lock and the wash program will start.

If a delay-start period has been selected, this counts down on the time display. At the end of the delay-start period or immediately after the program has started, the program duration will appear on the time display.

Energy savings

After 10 minutes, the indicators dim. The *Start/Add laundry* sensor button flashes.

You can reactivate the indicators:

- Touch the *Start/Add laundry* sensor button (this does not have any effect on a program that is running).

Adding laundry during a program sequence (AddLoad)

Laundry can be added or removed at any time, provided that the 🔒 symbol is not illuminated on the control field.

- Touch the *Start/Add laundry* sensor button.

Rotating bars [ ] ... [ ] ... [ ] are shown in the time display.

If the word Add appears on the time display, the door can be opened.

- Open the door and add or remove laundry.
- Close the door.
- Touch the *Start/Add laundry* sensor button.

The wash program will continue.

Laundry cannot usually be added or removed if:

- The suds temperature is above 130°F (55°C).
- The water inside the drum is above a certain level.

Opening the door and removing the laundry

The door remains locked during the Anti-crease phase. The control field lights up for the first 10 minutes. The control field then goes out and the *Start/Add laundry* sensor button flashes.

- Turn the program selector to the ⏻ position.

-0- appears on the time display and the 🔒 indicator light goes out.

The door will be unlocked.

Tip: After the Anti-crease phase, the door will unlock automatically.

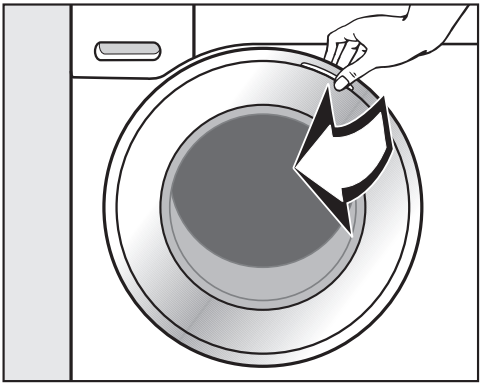

- Take hold of the door and pull it open.
- Remove the laundry.

Items left in the drum could discolor other items in the next wash or become discolored themselves.
Remove all items from the drum.

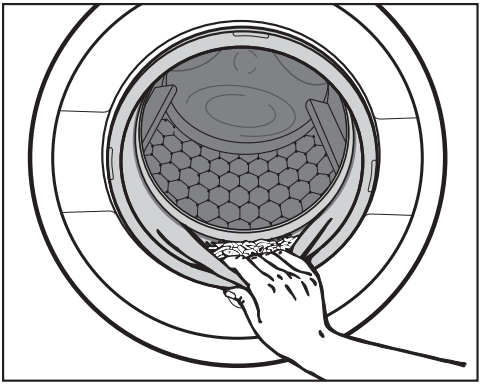

- Check the folds in the door seal for any foreign objects.

Tip: Leave the door slightly open to allow the drum to dry.

- If applicable, remove the used capsule from the detergent dispenser drawer.

Tip: Leave the detergent dispenser drawer slightly open to allow it to dry.

Final spin speed

Program	Selectable spin speeds in words and numbers (rpm)					
	Max 1,600	High 1,200	Med 800	Slow 600		
Normal	✓	–	–	–	●	●
Delicates	–	–	✓	●	●	●
Sanitize	✓	●	–	–	●	●
Handwash	–	✓	●	●	●	●
Dress Shirts	–	–	✓	●	●	●
Darks/Denims	–	✓	●	●	●	●
Express	–	✓	●	●	●	●
Extra White	✓	●	–	–	●	●
Outdoor	–	–	✓	●	●	●
Refresh	–	–	–	–	–	–
Drain/Spin	✓	●	●	●	–	●

Final spin speed in wash program

When a program is selected, the sensor button for the optimum spin speed for that program will be brightly lit up on the control field.

A faster spin speed can be selected for certain wash programs.

The highest selectable spin speed is indicated in the table.

Omitting the final spin (Rinse hold)

- Touch the sensor button (Rinse hold).

The laundry is not spun after the final rinse and remains in the rinse water. This helps prevent creasing if the laundry is not going to be removed from the drum immediately after the end of the program.

Ending a program with a spin cycle

The sensor button for the optimum spin speed lights up on the control field. You can change the spin speed.

- Touch the *Start/Add laundry* sensor button.

Ending a program without a spin cycle

- Reduce the spin speed to .
- Touch the *Start/Add laundry* sensor button.

Rinse-spin

There is a spin cycle after the main wash and between the rinse cycles. A reduction in the final spin speed will also reduce the interim spin speed as appropriate.

Deselecting the rinse-spin and final spin

- Touch the sensor button.

After the last rinse cycle, the water will be pumped away and the Anti-crease phase will switch on.

An Extra Rinse cycle is carried out with this setting for certain wash programs.

Delay Start

With the Delay Start function, you can delay the start of the program.

This function is active when the *P98* SmartGrid programmable function is switched off.

You can delay the start of a program from 30 minutes up to a maximum of 24 hours. This allows you to make use of night-time economy electricity rates, for example.

Selecting Delay Start

- Select the program required.
- Touch the ⏲ sensor button.



The ⏲ sensor button lights up brightly.

- Touch the < or > sensor button repeatedly until the required delay-start period appears on the time display.

- In the case of settings below 10 hours, the delay-start period changes in increments of 30 minutes.
- In the case of settings above 10 hours, the delay-start period changes in increments of 1 hour.

Starting Delay Start

- Touch the flashing *Start/Add laundry* sensor button.

The Delay Start process starts and counts down on the time display.

Changing or canceling a started Delay Start process

If the selected Delay Start function has started, it is no longer possible to change the time.

- Turn the program selector to the ⏻ position.
- Turn the program selector to any program.

Rotating bars *[¯]* ... *[_]* ... *[¯]* or *-0-* are shown on the time display.

The door lock is released.

- Select a program and a new delay-start period.

SmartStart

The SmartStart function lets you define a time period during which your washing machine will start automatically based on an external signal. The start takes place via a signal, e.g., from your energy supplier, that indicates that the electricity rate is particularly economical. Please check with your local utility provider for availability.

This function is active when the *P98* SmartGrid programmable function is switched on.

The time period can be defined between 30 minutes and 24 hours. During this period, the washing machine waits for the external signal. If no signal is sent during the defined period, the washing machine starts the wash program.

Setting the time period

If the *P98* SmartGrid programmable function is activated, the function of the ⏲ sensor button changes. The time display no longer shows the delay-start period, and instead shows the time period in which your washing machine can be started automatically (see “Programmable functions – *P98* SmartGrid”).

The procedure for setting this is the same as for setting the time for Delay Start.

- Touch the ⏲ sensor button.
- Set the time period you want using the < or > sensor buttons.
- Touch the Start/Add laundry sensor button.

Ctr appears on the time display.

Program guide

Temperature with garment care label symbols			Item/Tip
Normal			**Full load** (17.6 lb/8 kg)
Hot+	140°F/60°C		Cotton, linen, and mixed fiber textiles made of both cotton and linen.
Hot	120°F/50°C		
Warm+ ✓	105°F/40°C		
Warm	85°F/30°C		
Cold	Cold		
USA test program in accordance with: DOE Federal Register 10 CFR Part 430 Appendix J2 to subpart B **Canada test program in accordance with:** CAN/CSA-C360-13			
Delicates			**Small load** (6.6 lb/3 kg)
Hot+	140°F/60°C		For fine textiles made from synthetic fibers.
Hot	120°F/50°C		
Warm+ ✓	105°F/40°C		
Warm	85°F/30°C		
Cold	Cold		
Sanitize			**Full load** (17.6 lb/8 kg)
Sani ✓	170°F/75°C		Cotton or linen fabrics with direct skin contact or for which special hygiene requirements apply.
Handwash			**Small load** (4.4 lb/2 kg)
Warm+ ✓	105°F/40°C		For fine textiles which are only suitable for hand washing.
Warm	85°F/30°C		
Cold	Cold		

Temperature with garment care label symbols			Item/Tip
Dress Shirts			**Small load** (4.4 lb/2 kg)
Hot+	140°F/60°C		Pre-treat collars and cuffs depending on the level of soiling. Wash dress shirts and silk blouses in the *Delicates* program.
Hot	120°F/50°C		
Warm+ ✓	105°F/40°C		
Warm	85°F/30°C		
Cold	Cold		
Darks/Denims			**Small load** (4.4 lb/2 kg)
Warm+ ✓	105°F/40°C		Black and dark garments made from cotton, mixed fibers, and denim. - Wash inside out. - Denim often contains excess dye and may run during the first few washes. Therefore, wash light and colored items separately.
Warm	85°F/30°C		
Cold	Cold		
MobileStart			
The Miele@mobile app is used to select the programs and operate the appliance.			
Express			**Half load** (7.7 lb/3.5 kg)
Warm+	105°F/40°C		Cotton textiles that have hardly been worn or are only very lightly soiled. Selecting the *Lightly soiled* extra option will reduce the washing time by 10 minutes.
Warm ✓	85°F/30°C		
Cold	Cold		
Extra White			**Full load** (17.6 lb/8 kg)
Hot+ ✓	140°F/60°C		For white textiles made of cotton or linen without special hygiene requirements.

Program guide

Temperature with garment care label symbols			**Item/Tip**
Outdoor			**Small load** (5.5 lb/2.5 kg)
Warm+ ✓	105°F/40°C		Performance outerwear (e.g., jackets and trousers) made from membrane fabric such as Gore-Tex®, SYMPATEX®, WINDSTOPPER®, etc. - Zip up or close any jackets with Velcro before washing. - Do not use fabric softener. - If required, these garments can also be reproofed using the *Proofing* program. Reproofing after each wash cycle is not recommended.
Warm	85°F/30°C		
Cold	Cold		
Refresh			**Very small load** (2.2 lb/1.0 kg)
			Dry, unsoiled outerwear made of cotton, linen or mixed fiber that is slightly wrinkled. The outerwear must be suitable for tumble drying and resistant to ironing. - Smaller load sizes improve the end result. - Remove textiles immediately at the end of the program and then tumble dry in the dryer in the gentle smoothing program or hang on a hanger. - Not suitable for wool or textiles containing wool
Drain / Spin			**Full load** (17.6 lb/8 kg)
Cold	- Drain only: Set spin speed to ⌀. - Make sure you select the appropriate spin speed.		

You can supplement the wash programs with extra options.

Extra options are selected and deselected using the relevant sensor buttons on the control field.

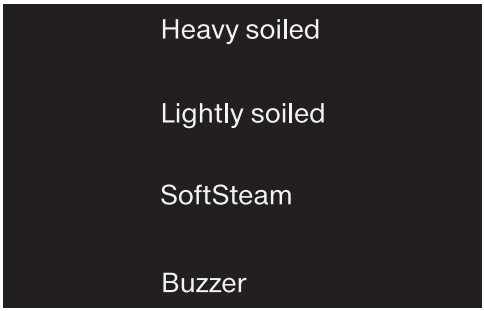

- Touch the sensor button for the extra option you require.

The relevant button will light up brightly.

Not all the extra options can be used with every program.

An extra option that is not permitted for the wash program is not lit dimly and cannot be activated by touch.

Lightly soiled

For slightly soiled textiles that are not stained. The wash duration is reduced.

Heavy soiled

For laundry that is very heavily soiled. The extended wash duration enhances the stain-removing effect.

SoftSteam

In order to reduce creasing, the laundry undergoes a smoothing process at the end of the program. Reducing the maximum load by 50% will give a better result. Small loads give a better result.

The garments must be suitable for drying in a tumble dryer ⊡ ⊡ and suitable for ironing ⩎ ⩎.

Buzzer

A buzzer sounds at the end of the program. The buzzer sounds until the washing machine is switched off. The volume of the buzzer can be changed, see “Settings – Buzzer”.

The following extra options can be selected in addition to the programs

	Lightly soiled	Heavy soiled	SoftSteam	Buzzer
Normal	●	●	–	●
Delicates	●	●	●	●
Sanitize	●	●	●	●
Handwash	●	–	–	●
Dress Shirts	●	●	●	●
Darks/Denims	●	●	●	●
Express	●	–	–	●
Extra White	●	●	●	●
Outdoor	●	●	–	●
Refresh	–	–	–	●
Drain/Spin	–	–	–	●

● = Can be selected

✓ = Activated automatically

– = Cannot be selected

Program sequence

	Main wash		Rinses		Spin cycle
	Water level	Wash rhythm	Water level	Rinses	
Normal		Ⓐ		2-3[1,2]	✓
Delicates		Ⓒ		2-4[1,2]	✓
Sanitize		Ⓐ		3-4[1,2]	✓
Handwash		Ⓔ		2	✓
Dress Shirts		Ⓒ		3-4[2]	✓
Darks/Denims		Ⓑ		3-5[1,2]	✓
Express		Ⓐ		2	✓
Extra White		Ⓐ		2-5[1,2]	✓
Outdoor		Ⓒ		3-4[2]	✓
Drain/Spin	–	–	–	–	✓

Please see the next page for a description of the symbols.

= low water level

= medium water level

= high water level

Ⓐ = intensive rhythm

Ⓑ = normal rhythm

Ⓒ = sensitive rhythm

Ⓓ = ultra sensitive rhythm

Ⓔ = handwash rhythm

✓ = carried out

– = not carried out

This washing machine has fully electronic controls with automatic load control. The washing machine takes in the right amount of water required for the program depending on the amount of laundry and its absorbency rate.

The program sequences outlined in the chart are based on the basic program with a full load.

Special features in the program sequence

Anti-crease:
At the end of the program, the drum continues to turn at intervals for up to 30 minutes to help prevent creasing.
Exception: There is no anti-crease phase in the *Normal* and *Handwash* programs. The washing machine can be opened at any time.

[1] An additional rinse is carried out if:

- there is too much foam in the drum
- a spin speed lower than *Medium* (800 rpm) has been selected.

[2] An additional rinse is carried out if the *ExtraRinse* extra option has been selected.

Changing a program (safety lock)

A program, temperature, spin speed, or selected extra options cannot be changed once the machine has been successfully started. This prevents the machine being operated unintentionally, e.g., by children.

If the washing machine is switched off during active program operation, the standby function does not switch the washing machine off completely after 15 minutes. Safety functions continue to be active because there may still be water inside the drum.

Canceling a program

You can cancel a wash program at any time after it has started.

- Turn the program selector to the ⏻ position.
- Turn the program selector to any position.

Rotating bars ⌊¯⌋ ... ⌊_⌋ ... ⌊¯⌋ or -0- are shown on the time display.

The water is pumped away and the door lock is then released.

Selecting a new program

- Turn the program selector to the required wash program.
- Check that there is still detergent in the dispenser drawer. Add more detergent if there is none left.
- Touch the *Start/Add laundry* sensor button.

Detergents recommended

The recommendations apply to the entire temperature range of the wash programs. There are no detergent recommendations for wash programs that are not listed.

	Miele UltraWhite	Miele UltraColor	Miele Caps	Miele Caps	Miele Caps	Universal detergent	Color detergent	Detergent for Woolens and delicates	Bleach [3]
Normal	✓	✓		✓	✓	✓	✓		✓
Delicates			✓	✓				✓	
Sanitize	✓	✓		✓	✓	✓	✓		✓
Handwash			✓	✓				✓	
Dress Shirts	✓	✓		✓	✓	✓		✓	✓
Darks/Denims		✓		✓			✓	✓	
Express		✓		✓			✓[1]		
Extra White	✓	✓		✓	✓	✓			✓
Outdoor			✓					✓	

✓ Recommended

[1] Liquid detergent

[2] Powder detergent

[3] If the “Bleach” setting has been activated

Special-purpose detergents (e.g., WoolCare)

Fabric care (e.g., fabric softener)

Additives (e.g., booster)

Cleaning the housing and control panel

⚠ Risk of electric shock.
Voltage is present when the washing machine is switched off
Disconnect the machine from the electricity supply before cleaning or maintenance.

⚠ Risk of damage due to ingress of water.
The pressure of a power washer can cause water to get into the washing machine, resulting in damage to components.
Do not spray the washing machine with a power washer when hosing down.

- Clean the housing and control panel with a mild cleaning agent or soap and water and dry both with a soft cloth.
- The drum can be cleaned using a suitable stainless steel cleaning agent following the manufacturer's instructions on the packaging.

⚠ Damage due to cleaning agents.
Do not use solvents, abrasive cleaners, glass cleaners or all-purpose cleaning agents. These might damage plastic surfaces and other components because of the chemicals they contain.
Do not use any of these cleaning agents.

Cleaning the detergent dispensing drawer

Washing at low temperatures and the use of liquid detergent can lead to a build-up of bacteria in the detergent dispenser drawer.

- For hygiene reasons, clean the entire drawer at regular intervals.

Removing the detergent dispenser drawer

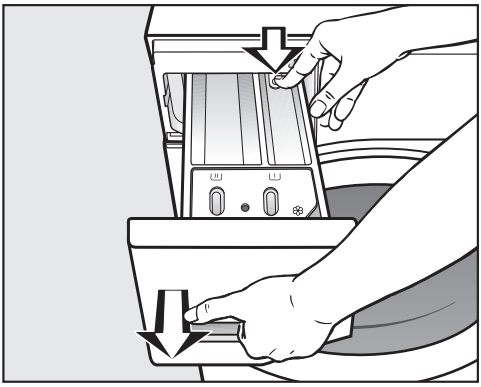

- Pull out the detergent dispenser drawer until a resistance is felt. Press down the release button and at the same time pull the drawer right out of the machine.

Removing and cleaning the insert for liquid detergents

An insert for liquid detergents is located in the II compartment of the detergent dispenser drawer.

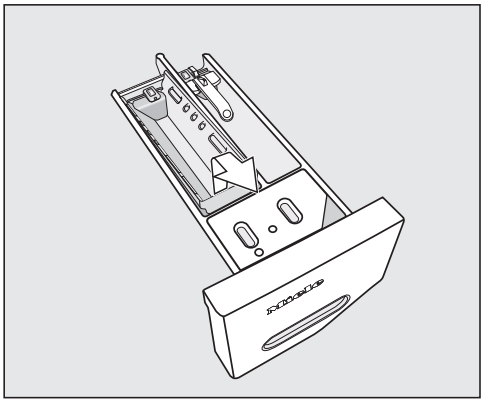

- Remove the insert. Clean the insert thoroughly with warm water.

Cleaning the △I compartment

Compartment 1 has a siphon for better dispensing of the chlorine bleach.

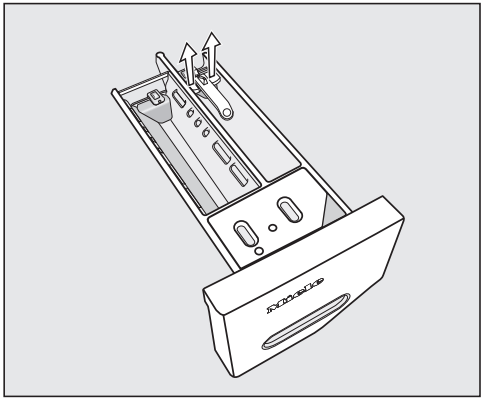

- Remove the release catch.

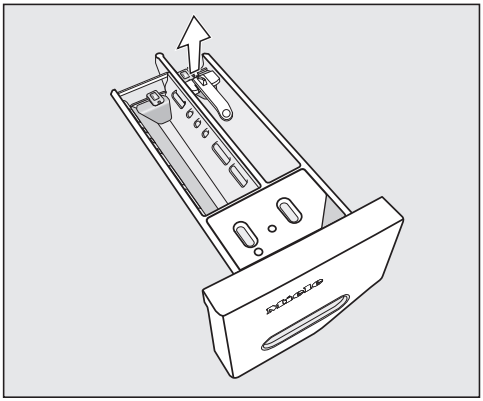

- Remove and clean the siphon.
- Clean the △I and II compartments with warm water.

Cleaning the siphon and the ❀/▽ compartment channel

Liquid starch results in clogging. If clogged, the siphon in the ❀/▽ compartment will not work and the compartment can overflow.

Clean the siphon particularly thoroughly after using liquid starch a few times.

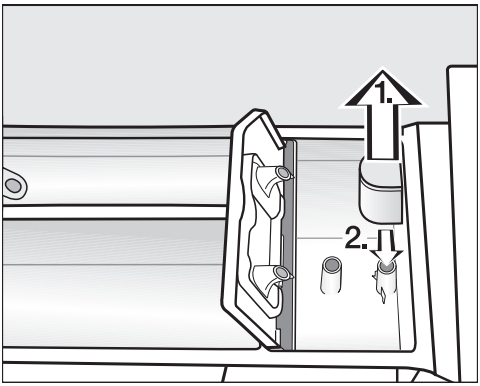

1. Remove the siphon from the ❀ compartment and clean under warm running water. Clean the siphon tube in the same way.
2. Refit the siphon.

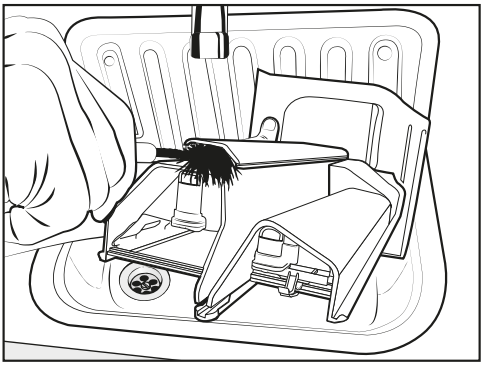

- Clean the fabric softener channel with a brush and warm water.

Cleaning the detergent dispenser drawer housing

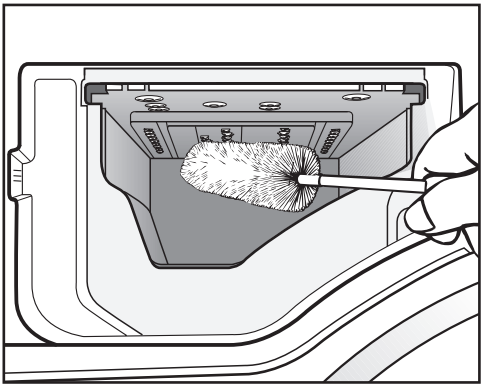

- Use a bottle brush to remove detergent residues and limescale from the jets inside the detergent dispenser drawer housing.
- Replace the detergent dispenser drawer.

Tip: Leave the detergent dispenser drawer slightly open to allow it to dry.

Sanitize info (Cleaning the drum)

Washing at low temperatures and/or using liquid detergent can cause bacteria and unpleasant odors to build up in the washing machine. Use the *Sanitize* program to clean the washing machine. Clean the drum no later than the point at which the **i** indicator light and *1* light up on the time display.

Cleaning the water-inlet filter

The washing machine has 2 filters to protect the inlet valve. Check these filters every 6 months or so. Check the filters more often if there are frequent interruptions to the external water supply.

Cleaning the filter in the inlet hose

- First turn off the faucet.
- Unscrew the inlet hose from the faucet.

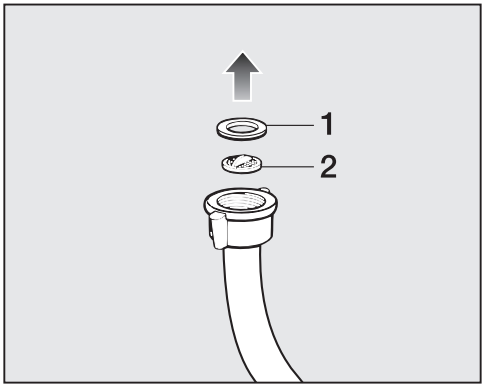

- Remove the rubber seal **1** from the connector.
- Using needle nose pliers, take hold of the plastic filter bar **2** and remove the plastic filter.
- Clean the filter.
- Reassemble in reverse order.

Cleaning the filter in the inlet valve

- Using pliers, carefully loosen the ribbed plastic nut on the inlet valve and unscrew.

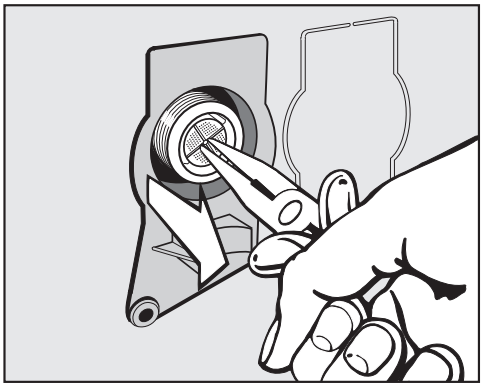

- Use needle nose pliers to withdraw the filter by the bar.
- Clean the filter.
- Reassemble in reverse order.

The filters must be put back in place after cleaning.

- Screw the screw thread securely back onto the faucet.
- Turn on the water-supply faucet.

Make sure there is no water leaking from the screw thread.
Tighten the screw thread.

Frequently asked questions

Many malfunctions and faults can be easily remedied. You can save time and money in many cases, as you do not need to contact Miele Service.

More information to help you rectify faults yourself can be found at https://www.mieleusa.com/support/customer-assistance.

A wash program cannot be started

Problem	Possible cause and solution
The control field remains dark.	There is no power to the machine. ■ Check whether the plug is plugged in. ■ Check whether the fuse has tripped.
	The washing machine has switched off automatically to save energy. ■ Switch the washing machine on again by turning the program selector.
F **and** *34* **appear alternately on the time display.**	The door is not closed properly. The door lock could not engage. ■ Close the door again. ■ Start the program again. If the fault message appears again, contact Service.
After the appliance is switched on, *UP* **appears in the time display.**	An update is available for the washing machine. See "Programmable functions – *P99* RemoteUpdate" for more information.

The program is canceled and a fault indicator light lights up on the control field

Problem	Possible cause and solution
The fault indicator light lights up, *F* **and** *11* **appear alternately on the time display, and the buzzer sounds.**	The drain is blocked or restricted. The drain hose has been fixed too high. ■ Clean the filter and the pump. ■ The maximum drain height is 39 ⅜" (1 m).

Problem	Possible cause and solution
The fault indicator light lights up, F and 10 appear alternately on the time display, and the buzzer sounds.	The water intake is blocked or restricted. ■ Check whether the water supply is turned on properly. ■ Check whether the intake hose is kinked. ■ Check whether there is sufficient water pressure.
	The filter in the water intake is blocked. ■ Clean the filter.
The fault indicator light lights up, F and 138 appear alternately on the time display, and the buzzer sounds.	The water protection system has reacted. ■ Close the water supply. ■ Contact Service.
F and XXX alternate on the time display and the buzzer sounds.	There is a fault. ■ Disconnect the washing machine from the power supply. Unplug the appliance or switch off the breaker. ■ Wait **at least 2 minutes** before reconnecting the washing machine to the power supply. ■ Then switch the washing machine on again. ■ Restart the program. If the fault message appears again, contact Miele Customer Service.

During the program sequence, a symbol appears on the time display

Message	Possible cause and solution
-0- is lit up on the time display.	The program selector was moved to a different position after the program had started. ■ Turn the program selector back to the original position.
Ctr lights up briefly on the time display when a program is selected.	The washing machine is indicating that it is networked.
OFF lights up on the time display when the *MobileStart* program is selected.	The remote control function is switched off. ■ Activate the remote control programmable function P97 to operate the washing machine via the app.

Message	Possible cause and solution
Con lights up on the time display when the *MobileStart* program is selected.	The washing machine is networked and can be operated via the app.
noC lights up on the time display when the *MobileStart* program is selected.	Miele@home is not set up. ■ Network the washing machine; see “Before using for the first time – 2. Setting up Miele@home”.

At the end of the program, an indicator light lights up on the control field

Problem	Possible cause and solution
The indicator light lights up.	Excessive foam has built up during washing. ■ Use less detergent next time and follow the manufacturer’s instructions on dosage given on the packaging.
The i indicator light lights up and 1 appears on the time display.	When washing, a wash program using a temperature of *Hot+* has not been run for a long time. ■ Run the *Sanitize* program using a universal powder detergent. The washing machine is cleaned which prevents bacteria and odor buildup.
F and 37 alternate on the time display.	The *SoftSteam* extra option which runs at the end of the program could not be carried out properly. ■ Check whether the washing machine is aligned correctly (see “Installation – Leveling the machine”). ■ Check whether the maximum drain height of 3' 3" (1 m) has been exceeded.
	If the fault message appears again, contact Miele Customer Service. The washing machine can still be used, but without the *SoftSteam* extra option.

General problems with the washer

Problem	Possible cause and solution
The washing machine is emitting an odor.	The ℹ indicator light lighting up and *1* appearing on the time display was ignored. When washing, a wash program using a temperature of *Hot+* has not been run for a long time. ■ In order to prevent bacteria and unpleasant odors building up in the washing machine, run the *Sanitize* program using a universal powder detergent.
	The door and detergent dispenser drawer were closed after washing. ■ Leave the door and the detergent dispenser drawer slightly open to allow them to dry.
The washer shakes during the spin cycle.	The four feet are not resting evenly on the floor. ■ Level the machine (see “Leveling the washer”).
The laundry has not been spun properly and the laundry is still wet.	The machine detected an imbalance during the final spin and reduced the spin speed automatically. ■ Wash large and small items together in order to achieve a more even load distribution.
There are unusual sounds coming from the drain pump.	There is no fault! Lapping sounds at the beginning and end of the drain process are normal.
Large amounts of detergent residue remain in the detergent dispensing drawer.	The water pressure is too low. ■ Clean the filter in the water intake. ■ Please note that the water pressure must be at least 14.5 psi (100 kPa).
	Powder detergent used in conjunction with water softeners tends to become sticky. ■ Clean the detergent dispenser drawer and in future, add detergent first and then the water softener.
The fabric softener is not completely dispensed or too much water remains in the ❀ compartment.	The siphon tube is either positioned incorrectly or clogged. ■ Clean the siphon tube, see “Cleaning and care - Cleaning the detergent drawer”.

Frequently asked questions

Problem	Possible cause and solution
At the end of the program there is still liquid in the capsule.	The small pipe in the detergent dispenser drawer onto which the capsule is placed is blocked. ■ Clean the small pipe.
	Not a fault. For technical reasons, a small amount of water will remain in the capsule.
There is water next to the capsule in the fabric softener compartment	The ⌓ sensor button was not activated. ■ Make sure that you remember to activate the ⌓ sensor button the next time you insert a capsule.
	An empty capsule was not removed at the end of the last wash program. ■ Remove and then dispose of the empty capsule at the end of each wash cycle.
	The small pipe in the detergent dispenser drawer onto which the capsule is placed is blocked. ■ Clean the small pipe.

Poor wash results

Problem	Possible cause and solution
Liquid detergent is not achieving the required results.	Liquid detergents do not usually contain bleaching agents. Consequently, fruit, coffee, and tea stains cannot always be removed. ■ Use powder detergent containing a bleaching agent. ■ Use the appropriate capsule or add stain removers to the II compartment. ■ Never put stain removers and liquid detergent together in the detergent dispenser drawer.
Gray, greasy particles cling to washed laundry.	Insufficient amounts of detergent were used. The laundry was heavily soiled with grease (oils, ointments). ■ Use more detergent or use liquid detergent with this type of soiled laundry. ■ Before washing the next load, run a Normal program with liquid detergent but without a load.

Problem	Possible cause and solution
White residues which look like powder detergent are seen on dark textiles after washing.	The detergent contained compounds (zeolites) to aid water softening which are not soluble in water. These have ended up on the laundry. ■ Try and brush off the residues with a soft brush once the laundry is dry. ■ In the future, wash dark textiles using a detergent which contains no zeolites. Liquid detergents do not usually contain zeolites. ■ Use the *Darks/Denim* program to wash the textiles.

The drum door cannot be opened

Problem	Possible cause and solution
The door cannot be pulled open during a program.	The drum is locked during a program. ■ Follow the description in "5. Starting a program — Adding or removing laundry".
After the program is canceled, flashing bars [ ]...[ ]...[ ]... appear on the time display.	To protect the user against scalding, the door cannot be opened if the suds temperature is higher than 130°F (55°C). ■ Wait until the temperature in the drum has decreased and the bars have stopped flashing on the time display.
F and 35 appear alternately on the time display.	The door lock has jammed. ■ Contact Service.

Opening the door in the event of a blocked drain outlet and/or power outage

- Turn off the washing machine.

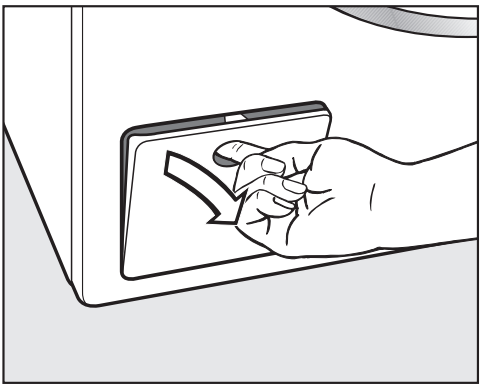

- Open the drain pump flap.

Blocked drain outlet

If the drain outlet is blocked, a larger quantity of water can remain in the washing machine.

⚠ Risk of scalding due to hot suds.
Escaping suds will be hot if laundry has been washed at high temperatures.
Carefully allow all suds to drain off.

Draining the washing machine

Remove the drain filter, though not completely.

- Place a suitable container under the flap, e.g., a bowl or dish.

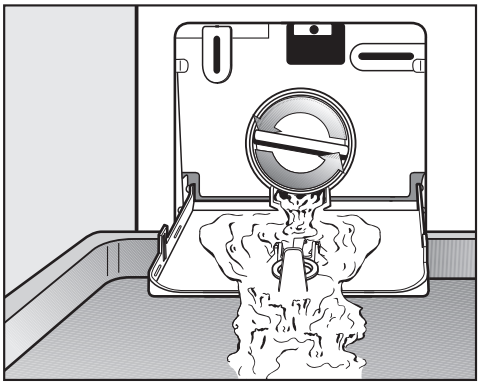

- Slowly unscrew the drain filter to let the water out.
- Tighten the drain filter back up again if you need to interrupt the flow of water.

Once the flow of water stops:

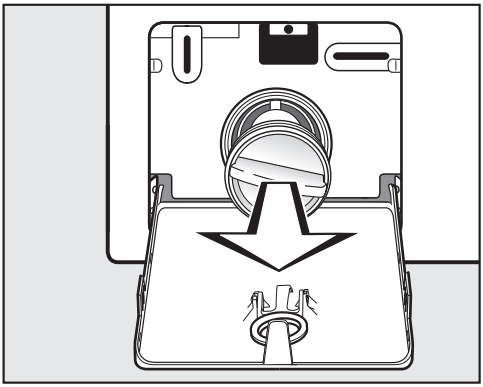

- Remove the drain filter completely.

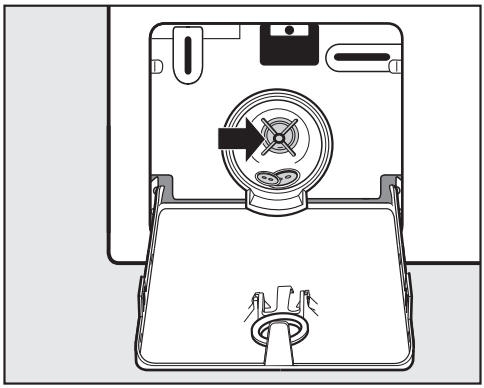

- Clean the drain filter thoroughly.
- Remove any foreign objects (e.g., buttons, coins, etc.) and clean the interior. Turn the impellers by hand to check that they rotate freely.
- Replace the drain filter correctly and tighten it securely.
- Close the drain pump flap.

⚠ Risk of water damage
Make sure the drain filter is securely tightened. Otherwise there is a risk of water leakage during use.
Replace the drain filter correctly and tighten it securely.

Opening the door

⚠ Danger of injury due to rotating drum.
Reaching into a rotating drum is extremely dangerous and may result in injury.
Always make sure that the drum is stationary before reaching in to remove laundry.

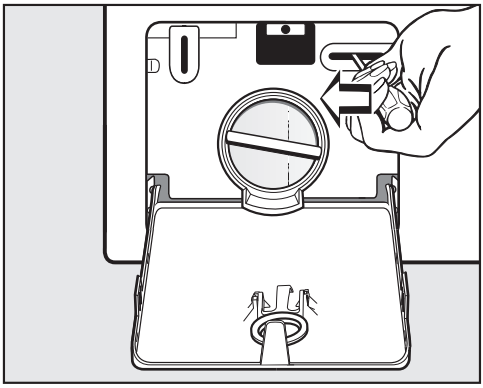

- Use a screwdriver to unlock the door.
- Pull open the door.

Information to help you rectify faults yourself and about Miele spare parts can be found at www.miele.com/service.

Contact in the event of a fault

In the event of a fault which you cannot remedy yourself, please contact your Miele dealer or Miele Customer Service.

You can book a Miele Service Call online at www.miele.com/service.

Contact information for Miele Customer Service can be found at the end of this document.

Please quote the model identifier and serial number of your appliance (SN) when contacting Miele Customer Service. Both pieces of information can be found on the data plate.

The data plate is found above the porthole glass when the door is opened.

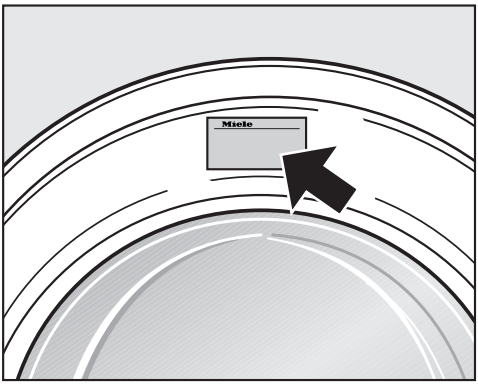

Optional accessories

Products specially tailored to your washing machine – such as detergent, fabric care products, additives, appliance care products, and accessories – are available from the Miele online store or from Miele Service.

You can access the Miele online store via the following QR code:

Appliance warranty and product registration

You can register your product and/or view the manufacturer´s warranty terms and conditions for Miele appliances and vacuum cleaners at www.mieleusa.com.

Front view

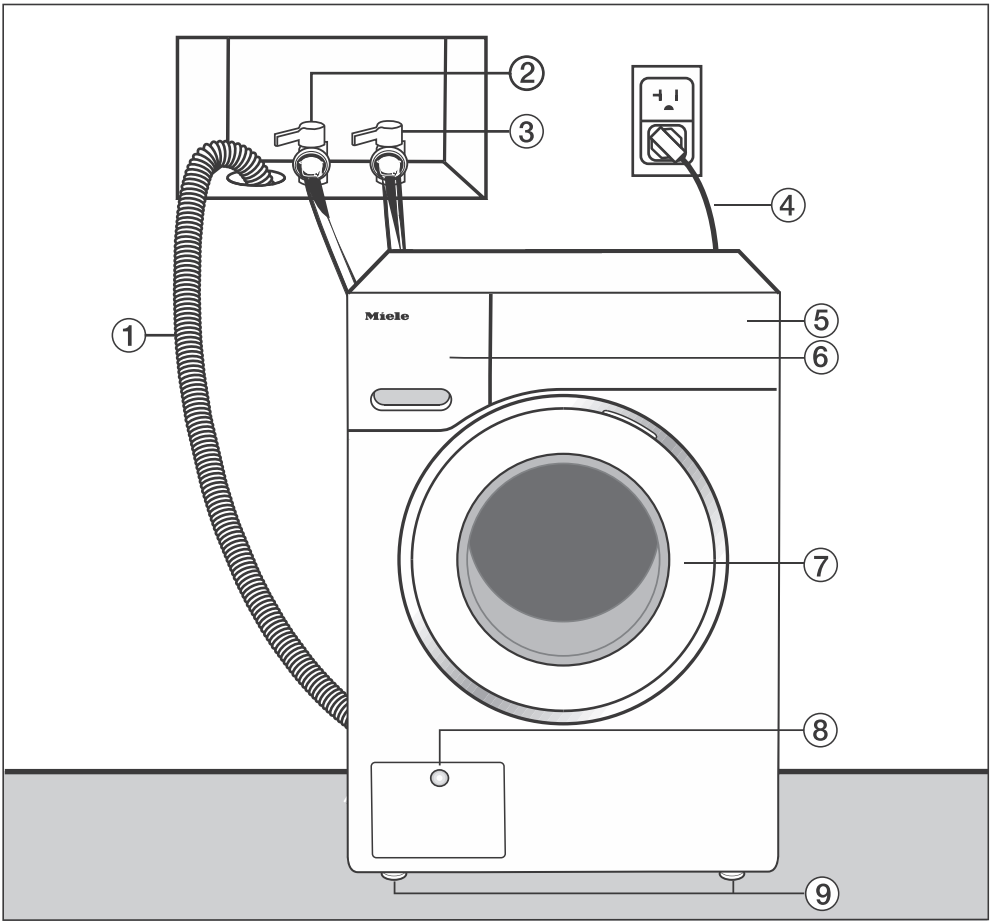

① Drain hose

② Hot-water inlet hose (pressure-proof to 870 psi/6,000 kPa)

③ Cold-water inlet hose (pressure-proof to 870 psi/6,000 kPa)

④ Electrical connection

⑤ Control panel

⑥ Detergent dispenser drawer

⑦ Door

⑧ Flap for drain filters, drain pump, and emergency release

⑨ Flap for TwinDos cartridges

⑩ Four height-adjustable feet

Rear view

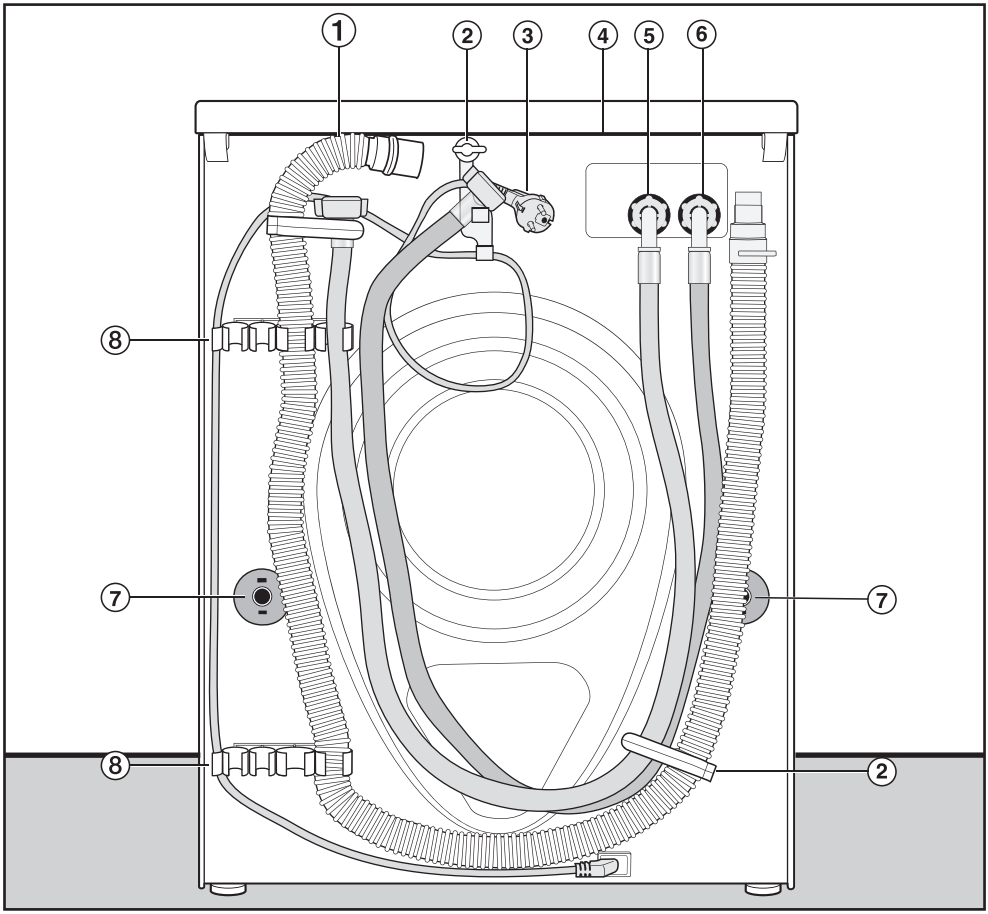

① Drain hose

② Transport clips for inlet and drain hoses and power cord

③ Electrical connection

④ Protruding lid for holding when moving the machine

⑤ Cold-water inlet hose (pressure-proof to 870 psi/6,000 kPa)

⑥ Hot-water inlet hose (pressure-proof to 870 psi/6,000 kPa)

⑦ Safety caps for shipping struts

⑧ Transport clips for inlet and drain hoses and for storing shipping struts when not in use

Installation surface

A concrete floor is the most suitable installation surface for this machine. It is far less prone to vibration during the spin cycle than wooden floorboards or a carpeted surface.

Please note:

- The machine must be level and securely positioned.
- To avoid vibrations during spinning, the machine should not be installed on soft floor coverings.

If installing on a wooden joist floor:

- Install the unit on a 24" x 24" x 1 $^{3}/_{16}$" (61 x 61 x 3 cm) plywood base. Ideally the base should be large enough to span several joists and should be anchored to the joists and not just the floor boards.

Tip: If possible, install the machine in a corner. This is usually the most stable part of the floor.

⚠ Injury can occur if the washing machine has not been adequately secured.
During installation, the washing machine must be secured on a raised plinth to be made available on site (concrete or brick), in order to ensure it cannot fall or slip.
Secure the washing machine using a clamp/fastening bracket (MTS floor mounting kit – available from your Miele dealer or Miele Service).

Transporting the washing machine to its installation site

⚠ Danger of injury due to unsecure lid.
The fixings at the back of the lid may become brittle due to external circumstances. There is a danger of the lid being pulled off when carrying the appliance.
Before carrying the appliance, check that the lid is secure where it protrudes at the back of the appliance.

- Carry the washing machine by the front feet and by the lid where it protrudes at the back of the appliance.

Removing the transport safety device

Removing the shipping struts

Remove the left-hand shipping strut first, followed by the right-hand shipping strut.

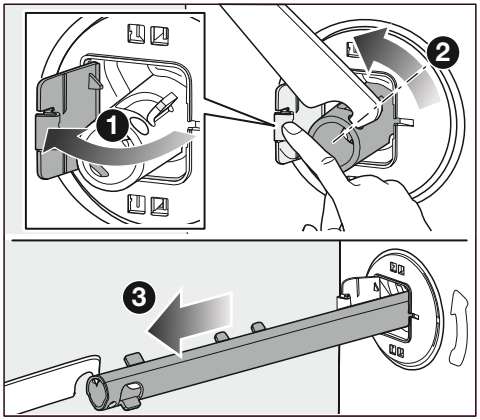

❶ Push the cover out.

❷ Using the wrench supplied, turn the shipping strut 90°.

❸ Pull out the shipping strut.

- Remove the right-hand shipping strut in the same way.

Covering the holes

⚠ Risk of injury from sharp edges.
There is a risk of injury from reaching into holes that are not covered.
After removing the transport safety device, cover the exposed holes.

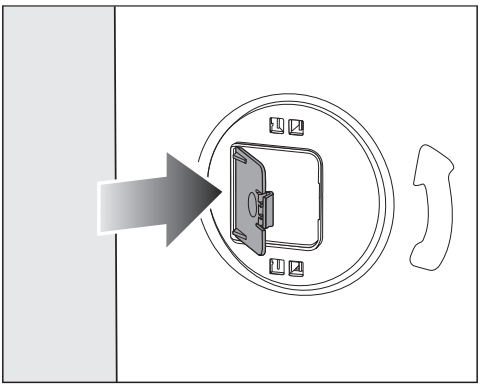

- Press the covers firmly shut until they click into place.

Securing the shipping struts

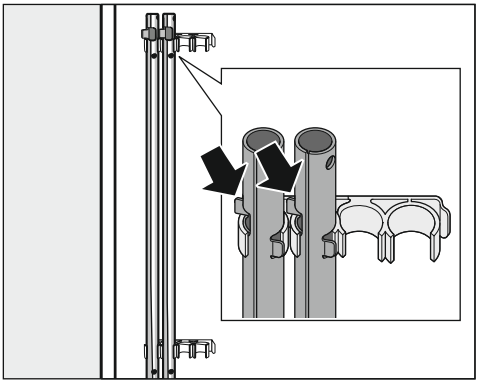

- Secure the shipping struts to the rear panel of the washing machine. Make sure that the top retainer is located above the holder.

Installing the shipping struts

Opening the covers

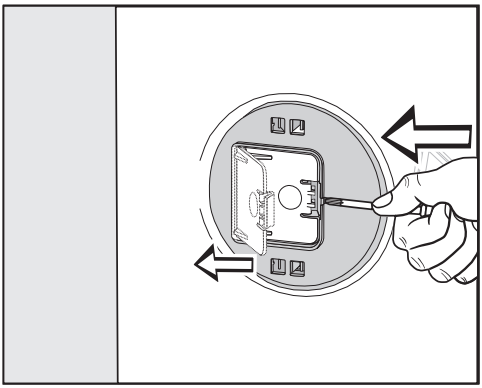

- Press against the catch with a thin object (a narrow screwdriver, for example).

The cover opens.

Installing the shipping struts

- Install the shipping struts by following the instructions for their removal in reverse order.

Tip: The struts will slide in more easily if you lift the drum slightly.

Leveling the machine

The washing machine must stand perfectly level on all four feet to ensure safe and proper operation.

Incorrect installation may increase electric and water consumption and may cause the machine to move about.

Unscrewing and adjusting the feet

The four adjustable screw feet are used to level the washing machine. All four feet are screwed in when the machine is delivered.

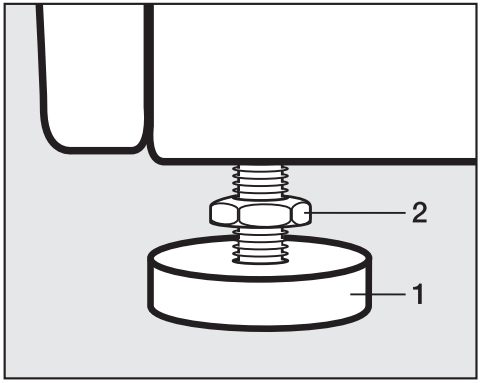

- Using the wrench supplied, turn counter nut **2** in a clockwise direction. Then turn counter nut **2** together with foot **1** to unscrew.

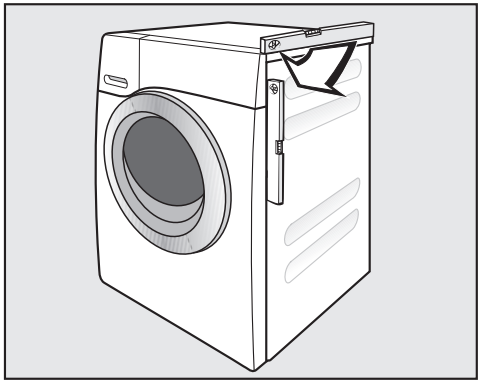

- Use a spirit level to check that the washing machine is standing level.
- Hold foot **1** securely with a pipe wrench. Turn counter nut **2** again using the wrench supplied until it sits firmly up against the housing.

⚠ Risk of damage due to incorrectly aligned washing machine.

There is a danger of the washing machine moving about if the feet are not secured.

Turn all four counter nuts for the feet until they sit firmly up against the housing. Please also check this for the feet which did not need adjustment.

Additional installation requirements

Product Dimensions

Dimensions

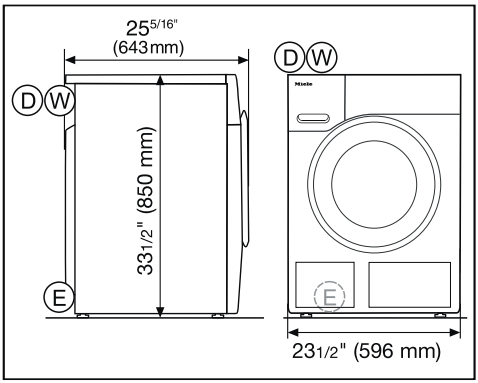

Ⓓ = 4'11" (1.5 m) drain hose with connection to the top left on the rear

Ⓔ = 6'6¾" (2.0 m) electrical cord with plug for 120 V, 15 A (NEMA 5-15 configuration) to the top left on the rear

Ⓦ = 5'3" (1.6 m) warm and cold-water intake hoses to the top left on the rear

Installation on a plinth

- WTS 510 (only available in white)

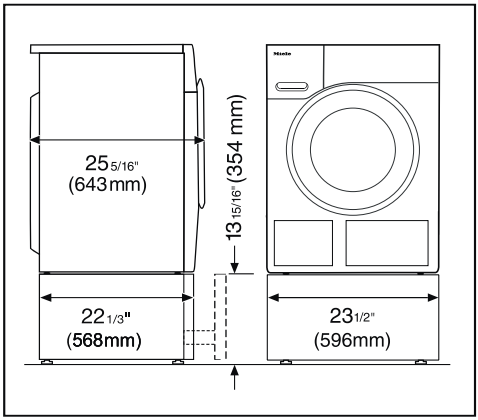

Washer-dryer stack

- WTV 512 and WTV 502 washer-dryer stacking kit

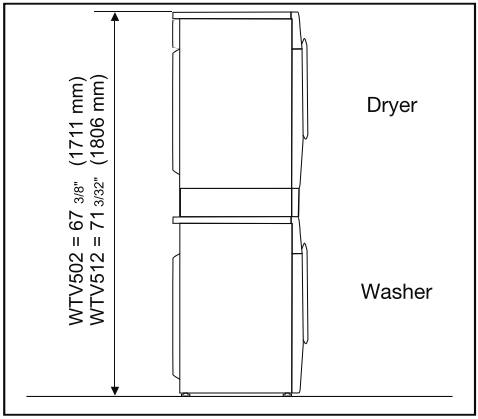

Installing under a countertop

⚠ Risk of electric shock due to exposed cables
There is a risk of coming into contact with live parts while the lid is removed.
Do not remove the washing machine lid.

This washing machine (with lid intact) can be pushed under a countertop if there is space to do so.

Washer-dryer stack

The washing machine can be installed as a washer-dryer stack together with a Miele Tumble Dryer. A WTV stacking kit* is required for this.

Parts marked with * are available from your Miele dealer or Miele Customer Service.

Please note:

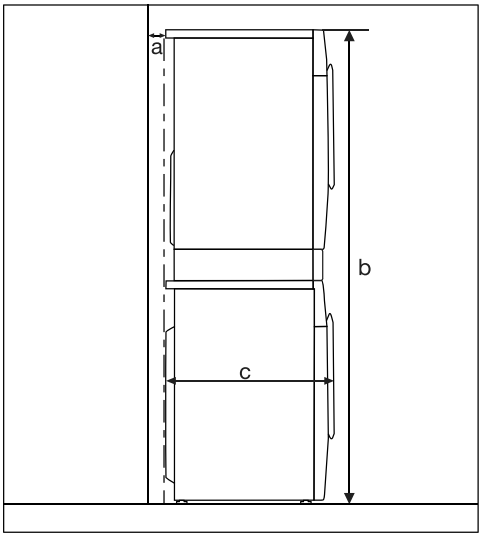

a = at least ¾" (2 cm)

b = WTV without drawer: 67 $^{11}/_{16}$" (172 cm)
WTV with drawer: 71 ¼" (181 cm)

c = 25 $^{9}/_{16}$" (65 cm)

The washing machine must be installed in accordance with the relevant local regulations.

Installation

⚠ Damage resulting from failure to remove the shipping struts.
Failure to remove the shipping struts can result in damage to the washing machine and to adjacent cabinetry or appliances.
Remove the shipping struts as described in “Installation and connection”.

Setting up the cabinet

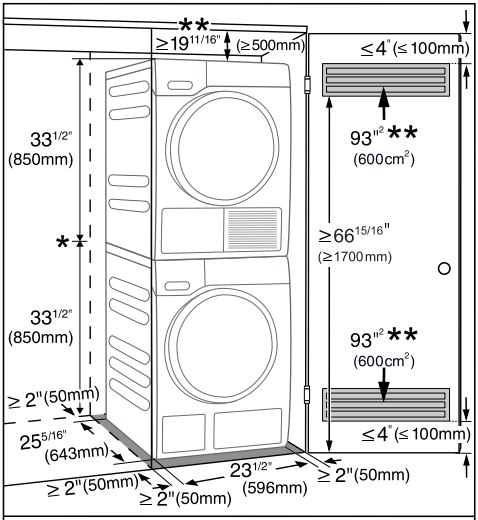

* Height with Stacking Kit
WTV502 = 67 3/8" (1711 mm)
WTV512 = 71 1/8" (1806 mm)

** If it is not possible to fulfill the dimension specification you may have longer drying and process time.

For closets at room height

You can also insert a ventilation opening at the top of the closet. In addition, you must provide an opening on the bottom side of the door.

⚠ Risk of damage due to overheating of the washing machine.
The air supply must not be hindered by an additional closet or shelf.
Please ensure that air is able to circulate freely at the top of the closet.

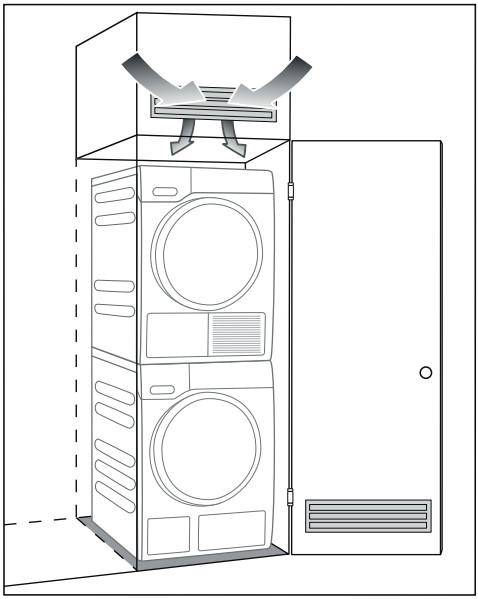

The water protection system

The Miele water protection system protects all parts of the washing machine and its surroundings from water damage.

The system consists of the following main components:

- the inlet hose
- the electronic module and drainage and overflow protection
- the drain hose

Inlet hoses

- Protection against the hoses bursting The inlet hose can withstand pressure of more than 1,015 psi (7,000 kPa).

Electronics and housing

- Floor tray: Any leaking water from the washing machine is collected in the drip tray. There is a float switch to close the water intake valve. The water inlet is shut off and any water inside the suds container is drained away.
- Leak protection: Any leaking water that is not collected in the drip tray is detected. The water inlet is shut off and any water inside the suds container is drained away.
- Overflow protection: This prevents the washing machine from taking in too much water and overflowing. If the water level exceeds a certain level, the drain pump switches on and pumps the excess water away.

Drain hose

The drain hose is protected by a ventilation system which prevents the washing machine from being emptied completely.

Water intake

⚠ Health risk and risk of damage due to contaminated incoming water.

The quality of the incoming water must comply with the requirements for drinking water in the country in which the washing machine is being operated.

Always connect the washing machine to the drinking water supply.

The washing machine can be connected to a portable water supply. A non-return valve is not needed unless required by building code.

The washing machine has ½“ (13 mm) pressure hoses with ¾” (19 mm) female hose thread connections. If there is no water hookup, contact a plumber to install a connection. Make sure that the sealing ring is seated properly on the hose connector.

Replace the hose only with a genuine Miele hose, or with a hose able to withstand up to 145 psi (1,000 kPa) pressure. The water valve connector must also be able to withstand 145 psi (1,000 kPa).

The screw thread is subject to water connection pressure.

Check the connection for leaks. Slowly open the faucet. Correct the position of the seal and screw thread if necessary.

Maintenance

Only use a genuine Miele hose that has been tested to withstand pressure of at least 870 psi (6,000 kPa) should you ever need a replacement.

⚠ A filter is located in the open end of the inlet hose and another in the intake point to protect the inlet valve. Neither filter may be removed.

Water drainage

The suds are drained through a drain pump with a 3.2 ft (1 m) delivery head. For the water to drain freely, the hose must be installed free of kinks.
If required, the hose can be extended to a length of up to 16.4 ft (5 m). Accessories are available from your Miele dealer or Miele Customer Service.

For a delivery head of more than 3.2 ft (1 m) (up to a max. of 5.9 ft (1.8 m)) a replacement drain pump will need to be installed. Please contact Miele Customer Service for advice.
For a delivery head of 5.9 ft (1.8 m) the hose can be extended to a length of up to 8.2 ft (2.5 m). Accessories are available from your Miele dealer or Miele Customer Service.

Drainage options:

1. Direct into a sink or basin:

   Please note:

   – Hook the hose over the edge and secure!

   – If the water is pumped into a sink, be sure that it can drain away quickly enough. Otherwise there is a risk of water overflowing or of some of the drained water being sucked back into the machine.

2. Connected securely to a plastic drain pipe with a rubber nipple (there is no need to use a non-return valve).
3. Connected securely to a floor drain.
4. Connected securely to a sink with a plastic nipple.

Drain adapter

Miele offers a drain adapter for connection to a plastic drain pipe or washbasin as an optional accessory. The drain adapter offers the option of connecting only the washing machine or the washing machine together with the tumble dryer.

Connecting the hoses to the drain adapter

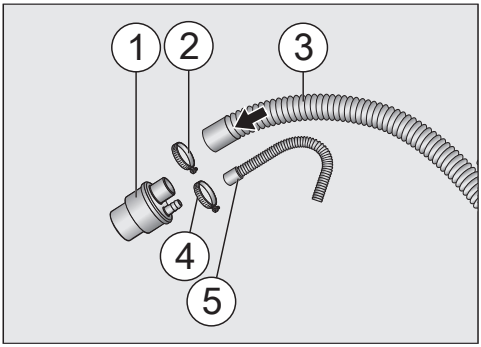

① Drain adapter

② Hose clip

③ Washing machine drain hose

④ Hose clip

⑤ Tumble dryer drain hose

- Attach the hoses to the drain adapter as shown in the illustration.
- Secure the hoses with hose clips.

Connect to plastic drain pipe

The drain adapter fits onto a standpipe with a diameter of DN 40 or DN 50.

The maximum delivery head of the washing machine is 1 m. The maximum length of the drain hose is 2.5 m.

Tip: The sealing ring supplied with the drain adapter must not be used.

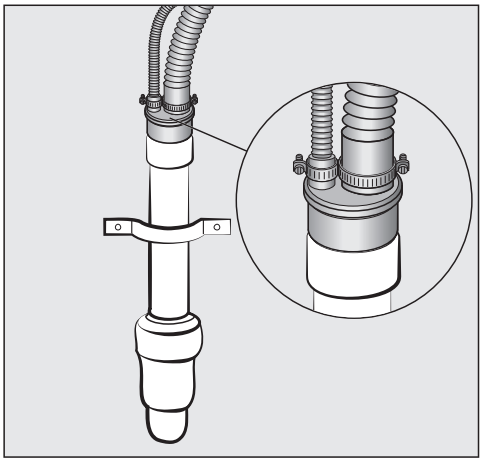

- Insert the drain adapter into the plastic drain pipe.

Connect to washbasin

Connection is possible to a washbasin siphon with a $1^1/_2$" thread.

Tip: Make sure that the seal is inserted in the adapter.

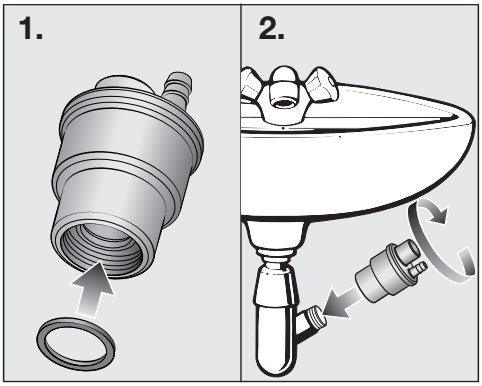

- Insert the seal into the drain adapter.
- Screw the adapter onto the washbasin siphon.

Place the drain hose on a floor drain (gully)

Tip: The maximum drain length is 5 m.

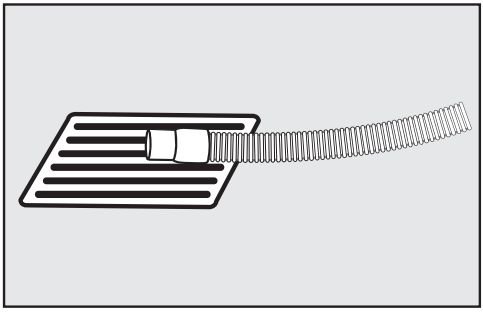

- Lay the drain hose on the floor drain.
- If necessary, secure the hose to prevent it from slipping.

Hang the drain hose in the laundry or utility sink

If the drain is via a sink, a quick drain must be guaranteed. Otherwise, there is a risk of flooding or back siphoning into the washing machine.

Tip: Use the enclosed elbow to prevent the drain hose from slipping.

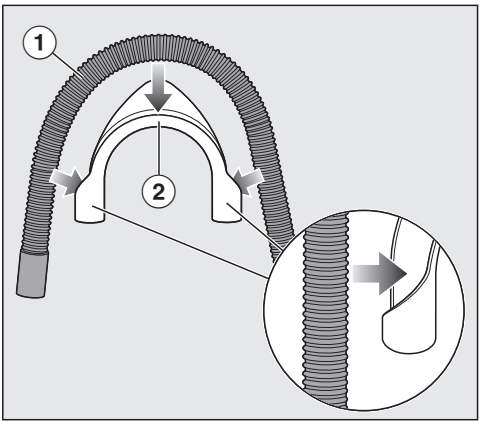

- Insert the drain hose ① into the elbow ②.

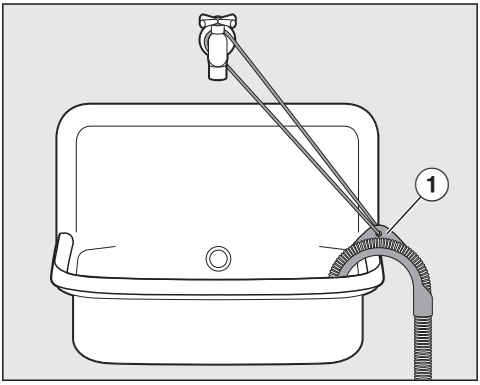

- Hang the drain hose in a sink.
- Secure the elbow against slipping using a strap and the eyelet ①.

Electrical connection

GROUNDING INSTRUCTIONS

This appliance must be grounded. In the event of a malfunction or breakdown, grounding will reduce the risk of electric shock by providing a path of least resistance for electric current. This appliance is equipped with a cord having an equipment-grounding conductor and a grounding plug. The plug must be plugged into an appropriate outlet that is properly installed and grounded in accordance with all local codes and ordinances.

WARNING – Improper connection of the equipment-grounding conductor can result in a risk of electric shock. Check with a qualified electrician or service representative if you are in doubt as to whether the appliance is properly grounded.

Do not modify the plug provided with the appliance; if it will not fit the outlet, have a proper outlet installed by a qualified electrician.

ELECTRICAL INSTRUCTIONS

This installation should be performed by an experienced and qualified technician, in accordance with local codes and regulations.

The washing machine is supplied with a 6'6¾" (2.0 m) long, 3 wire cord, ending in a NEMA 5-15P plug, ready for connection to a 120 V, 15 A, 60 Hz, AC power supply.

The manufacturer recommends operating the appliance on a dedicated circuit to avoid overloading the electrical circuit.

The proper outlet can be purchased from an electrical supply dealer.

Technical data

Height	33 1/2" (850 mm)
Width	23 1/2" (596 mm)
Depth	25 5/16" (636 mm)
Depth with door open	41 1/2" (1054 mm)
Height for building under	33 1/2" (+5/16"/-1/16") (850 mm)
Width for building under	23 5/8" (600 mm)
Weight	Approx. 220.5 lb (100 kg)
Capacity	17.6 lb/8.0 kg dry laundry
Connection voltage	See data plate
Rated load	See data plate
Fuse rating	See data plate
Minimum water flow pressure	14.5 psi (100 kPa)
Maximum water flow pressure	145 psi (1,000 kPa)
Water-inlet hose length	5'3" (1.6 m)
Drain-hose length	4'11" (1.5 m)
Power-cord length	6'6 3/4" (2.0 m)
Maximum drain height	3'3 3/8" (1.0 m)
Maximum drain length	16'4 7/8" (5.0 m)
LEDs	Class 1
Test certificates awarded	See data plate
Frequency range	2.412–2.462 GHz
Maximum transmission power	< 100 mW

The programmable functions are used to alter the machine's electronics to suit changing requirements. Programmable functions can be altered at any time.

Programming is carried out in 8 steps (❶, ❷, ❸ ... ❽) using the sensor buttons.

Accessing the programming level

Before you begin, ensure the following:

- The washing machine is switched on (the program selector is pointing to a wash program).
- The washing machine door is open.

❶ Touch the *Start/Stop* sensor button and hold it down during steps ❷–❸.

❷ Close the washing machine door.

Wait until the *Start/Stop* sensor button lights up constantly...

❸ ...and then release the *Start/Stop* sensor button.

After approximately 4 seconds, *P11* will light up on the time display.

Choosing and selecting programmable functions

The number of the programmable function will appear on the display as *P* and a number: e.g., *P13*.

❹ Touch the > or < sensor button to scroll to the next or previous programmable function:

Programmable functions	
P11	Buzzer duration
P12	Buzzer
P13	Keypad tone
P14	PIN code
P22	Control field switch-off status
P24	Memory
P25	Water inlet
P28	Gentle action
P29	Reduce temperature
P32	Maximum rinse level
P33	Suds cooling
P34	Anti-crease
P49	Low water pressure
P55	Chlorine bleach
P62	Display brightness dimmed
P63	Welcome tone volume
P90	Operating hours
P00	Factory default
P97	Remote control
P98	SmartGrid
P99	RemoteUpdate

❺ Confirm the selected programmable function by touching the *Start/Add laundry* sensor button.

Editing and saving the programmable function

You can either switch a programmable function on/off or select different options.

❻ Touch the > or < sensor button to switch the programmable function on/off or to select an option:

Programmable function	Available options					
	-00	-01	-02	-03	-04	-05 – -99
P11		●	●			
P12		●	✓			
P13	●	✓	●			
P14	✓	●				
P22	●	✓				
P24	✓	●				
P25		●	✓			
P28	✓	●				
P29	✓	●				
P32	✓	●				
P33	✓	●				
P34	●	✓				
P49	✓	●				
P55	✓	●				
P62		●	✓	●	●	●
P63	●	✓				
P00	●	●				
P97	●	✓				
P98	✓	●				
P99	●	✓				

❼ Confirm the chosen selection with the *Start/Add laundry* sensor button.

The number of the programmable function, e.g., *P13*, will then light up again.

Exiting the programming level

❽ Turn the program selector to ⏻.

The setting you have selected are now stored in the memory. You can alter the settings again at any time.

P11 Buzzer duration

The buzzer sounds to let you that it is the end of the programme. You can decide how long the buzzer should sound for.

Options

-01 = The buzzer sounds 3 times at the end of the programme

-02 = The buzzer sounds until the washing machine switches off automatically (max. 1 hour).

P12 Buzzer

The buzzer sounds to let you know the programme has finished.

Options

-00 = Buzzer is switched off

-01 = Buzzer is set to normal volume

-02 = Buzzer is set to loud volume

P13 Keypad tone

Each touch of a sensor button is confirmed with an audible tone.

Options

-00 = Keypad tone is switched off

-01 = Keypad tone is set to normal volume

-02 = Keypad tone is set to loud volume

P14 PIN code

The PIN code prevents the washing machine being used without your knowledge.

When the PIN code has been activated, you have to enter it after switching the washing machine on. Otherwise, the washing machine cannot be operated.

Options

-00 = PIN code is switched off

-01 = PIN code is switched on

Using the washing machine with a PIN code

The code is **125** and cannot be altered.

■ Switch on the washing machine.

_ _ _ appears on the time display and the > and < sensor buttons light up.

■ Touch the > sensor button.

1 _ _ appears on the time display.

■ Confirm the number with the *Start/Stop* sensor button.

The first number has been saved and you can now enter the second number using the > and < sensor buttons.

■ Enter the second and third numbers and confirm the numbers with the *Start/Stop* sensor button.

The lock is released and a wash program can now be selected and started.

P22 Control field switch-off status

To save energy, the time display and sensor buttons will go out after 10 minutes, and only the *Start/Stop* sensor button will flash.

Options

-00 = Off
The time display and sensor buttons will remain lit up while the washing machine is switched on

-01 = On
The time display and sensor buttons will switch off after 10 minutes if the program is started.

However, the time display and sensor buttons will remain lit up for 10 minutes after a Delay Start time has elapsed, after the end of a program, or at the end of the Anti-crease phase.

P24 Memory

The washing machine will save the last settings (temperature, spin speed, and some of the extra options) selected for a wash program after the program has started.

When the program is chosen again, the saved settings will appear on the display.

Options

-00 = Memory is switched off

-01 = Memory is switched on

P25 Water intake

You can program 2 options for the water intake. The water intake is controlled by the two intake hoses.

Options

-01 = Cold water

The washing machine will be operated with cold water only.

-02 = Hot water

Hot water is used in the main wash.

⚠ Risk of damage from incorrect water connection.

Connection to a hot water supply only is not permitted. When being operated with hot water, the washing machine always requires a cold water connection as well in order to control the temperature of the water used for washing the laundry.

The washing machine must always be connected to cold water.

P28 Gentle action

When Gentle action is activated, drum rotation is reduced. In this way, lightly soiled items can be washed more gently.

Gentle action can be activated for the *Normal* and *Wrinkle-free* programs.

Options

-00 = Gentle action is switched off

-01 = Gentle action is switched on

P29 Reducing the temperature

At high altitudes, water has a lower boiling point. Miele recommends switching on the reduce temperature setting at altitudes of 6,560 ft (2,000 m) or above to prevent water from boiling. The maximum temperature is reduced to 176°F (80°C), even if a higher temperature has been selected.

Options

-00 = The reduce temperature setting is switched off

-01 = The reduce temperature setting is switched on

P32 Maximum rinse level

The water level in the rinse can be permanently set to the highest value.

This function is important for allergy sufferers as it achieves excellent wash results. The water consumption will be increased.

Options

-00 = Maximum rinse level is switched off

-01 = Maximum rinse level is switched on

P33 Suds cooling

Additional water flows into the drum at the end of the main wash to cool the suds down.

Suds cooling takes place when a Normal program with a temperature of 158°F (70°C) or higher is selected.

Suds cooling should be activated:

- To prevent the danger of scalding if the drain hose is hooked over the edge of a sink or basin.
- Where the drainage pipes do not comply with DIN 1986.

Options

-00 = Suds cooling is switched off

-01 = Suds cooling is switched on

P34 Anti-crease

The Anti-crease function helps prevent creasing after the end of the program.

At the end of the program, the drum continues to turn for up to 30 minutes. The door can be opened at any time during the Anti-crease phase.

Options

-00 = The Anti-crease function is switched off

-01 = The Anti-crease function is switched on

P49 Low water pressure

If the water pressure is below 100 kPa (1 bar), the program will be canceled and the fault message will appear.

If the water pressure cannot be increased, activating this function will prevent the program from being canceled.

Options

-00 = Low water pressure is switched off

-01 = Low water pressure is switched on

P55 Chlorine bleach

You can activate the automatic addition of chlorine bleach at the end of the main wash.

Chlorine bleach may only be used in some programs. See “5. Adding detergent – Using chlorine bleach” for more detailed information.

Activating chlorine bleach extends the program duration by approximately 10 minutes.

Options

-00 = Chlorine bleach is switched off

-01 = Chlorine bleach is switched on

P62 Display brightness dimmed

The brightness of the dimmed sensor buttons on the control field can be set to one of seven different levels.

The brightness will change as soon as a different setting is chosen.

Options

-01 = Darkest level

↓

-07 = Brightest level

P63 Welcome tone

The welcome tone sounds whenever the washing machine is switched on.

You can switch the welcome tone on or off.

Options

-00 = Welcome tone is switched off

-01 = Welcome tone is switched on at **normal** volume

-02 = Welcome tone is switched on at **loud** volume

P90 Operating hours

You can read off how many hours the washing machine has been in operation for.

The total washing time is shown on the time display in single digits. The washing machine has been in operation for 1234 hours, for example. The figure show on the time display will start with an H followed by a 1, then a 2 and after this a 3 and a 4. The letter H is displayed again after this.

P00 Factory default

All programmable functions except P90 operating hours are reset to the factory default settings.

Options

-00 = Go back (without reset to factory default settings)

-01 = Reset programmable functions to the factory default settings

Networking

The *P97*, *P98*, and *P99* programmable functions are only displayed if the requirements for using Miele@home have been met (see “Before using for the first time – Miele@home”).

P97 Remote control

You can use the Miele app to check the status of your washing machine from anywhere and start it remotely. You can also control it remotely via the MobileStart program.

You can switch off the *P97* programmable function if you do not want to operate the washing machine with your mobile device.

If the *P97* programmable function is not switched on, the app can still be used to cancel a program.

Use the ⏲ sensor button to set a time period within which you want to start the washing machine and start the Delay Start function (see “Delay Start/ SmartStart”). The washing machine will then start within the time period specified when it receives your signal. If it has not received a start signal by the latest start time set, the washing machine will start automatically.

Options

-00 = Remote-control function is switched off

-01 = Remote-control function is switched on

P98 SmartGrid

You can set your washing machine to start automatically based on an external signal within a certain time period.

If you have activated SmartGrid, the ⏲ sensor button will have the new “SmartStart” function rather than the “Delay Start” function.

Use the ⏲ sensor button to set a SmartStart time period. The washing machine will then start within the time period specified by you when it receives an external signal. If an external signal has not been received by the latest start time set, the washing machine will start automatically (see “Delay Start”).

Options

-00 = SmartGrid is switched off

-01 = SmartGrid is switched on

P99 RemoteUpdate

The RemoteUpdate function updates the software in your washing machine. If an update is available for your washing machine, it will automatically download it. Updates will not be installed automatically. They must be initiated manually.

If you do not install an update, you can continue to use your washing machine in the usual way. However, Miele recommends installing updates.

Activating/deactivating

The RemoteUpdate function is activated as standard. Available updates will be downloaded automatically but will only be installed if you initiate installation manually. Deactivate RemoteUpdate if you do not want any updates to be downloaded automatically.

Options

-00 = RemoteUpdate is deactivated

-01 = RemoteUpdate is activated

Running a RemoteUpdate

Information about the content and scope of an update is provided in the Miele app.

A *UP* message will appear on the time display if an update is available.

You can install the update immediately or postpone this until later. When the washing machine is switched on again, you will be reminded about the update.

Deactivate RemoteUpdate if you do not want to install any updates.

The update may take several minutes.

Please note the following information about the RemoteUpdate function:

- You will only receive a message when an update is available.
- Once an update has been installed, it cannot be undone.
- Do not switch off the washing machine during an update. Otherwise, the update will be aborted and will not be installed.
- Some software updates can only be carried out by Miele Customer Service.

Starting the update

After the washing machine is switched on, *UP* appears on the time display.

■ Touch the Start/Add laundry sensor button.

UP starts to flash on the time display. The update starts.

Bars on the time display show the progress of the update:
I = 0%
IIIIII = 100%

Postponing the update

After the washing machine is switched on, *UP* appears on the time display.

■ Touch the ◇ sensor button.

The duration of the selected program appears on the time display.

The next time you switch on the appliance, you will be prompted to start the update again.

Switching off WiFi

■ Turn the program selector to the *MobileStart* program.

Con appears on the time display.

■ Touch the ◈ sensor button and hold the ◈ sensor button until the countdown on the time display has finished.

--- appears on the time display.

- The WiFi is switched off.
- The WiFi connection will be reset to the factory default.

  The network configuration should be reset whenever a washing machine is being disposed of or sold, or if a used washing machine is being put into operation. This is the only way to ensure that all personal data has been removed and the previous owner will no longer be able to access the washing machine.

  A new connection setup has to be carried out in order to use the Miele@home setting again.

Copyrights and licenses for the communication module

For the purpose of operating and controlling the communication module, Miele uses proprietary or third-party software that is not covered by open source licensing terms. This software/these software components are protected by copyright. The copyrights held by Miele and third parties must be respected.

This communication module contains software components which are distributed under open source license conditions. The open source components contained in the appliance along with the corresponding copyright notices, copies of the licensing terms valid at the time, and any additional information can be accessed locally via *http://<IP address>/Licenses*. The liability and warranty arrangements for the open source licenses displayed in this location only apply in relation to the respective rights holders.

Please have the model and serial number of your appliance available when contacting Customer Service.

U.S.A.

Miele, Inc.

National Headquarters
9 Independence Way
Princeton, NJ 08540
www.mieleusa.com

Customer Support
Phone: 888-99-MIELE (64353)
info@mieleusa.com

International Headquarters
Miele & Cie. KG
Carl-Miele-Straße 29
33332 Gütersloh
Germany

Canada

Importer
Miele Limited

Headquarters and Miele Centre
161 Four Valley Drive
Vaughan, ON L4K 4V8
www.miele.ca

Customer Care Centre
Phone: 1-800-565-6435
905-532-2272
contact@miele-support.ca

Miele

WXC 280

en-CA, US

M.-Nr. 12 964 700 / 00 / 002