LDNPC227_

FlushFit™ Top Control Dishwasher with AutoVent™ Dry

KEY FEATURES

- FlushFit™ Design
- AutoVent™ Dry
- Steam Assist
- Pocket Handle
- LoDecibel™ Operation 52 dBA



AVAILABLE COLORS

- STAINLESS STEEL
- BLACK
- WHITE

ENERGY STAR

SMART APPLIANCE

ThinQ Care

Proactive Smart Alerts to Keep Your Appliances Running Smoothly

- Preventative Alerts help you stay a step ahead of potential issues to find proactive solutions before problems arise.
- Avoid preventable repairs and service calls with real-time diagnostics for a hassle-free experience.
- Integrated within LG's ThinQ app—a smart home hub for managing your smart devices and appliances.

PRODUCT FEATURES

CAPACITY	
Capacity	14 Place Settings
Upper Rack Dish Height Limit	4.9" (126mm)
Lower Rack Dish Height Limit	5.4" (137mm)
RACKS AND BASKETS	
Rack Grade	Basic
Fold Down Tines (Upper)	Fixed
Fold Down Tines (Lower)	All Fixed
Rack Handle	Semi Pocket Handle
Rack Handle / Deco (Upper/ Lower)	No
Rack Color (Body)	Dark Grey
Cup Rack / Stemware Holder	Yes
Cuprack Color	Cup Rack (Dark Grey) / Rubber (Noble Grey)
Cutlery Baskets	Yes
Gliding Type	Normal Rail (Upper) / Normal Wheel (Lower)
FEATURES	
Steam	Normal Steam
Lower Wash Arm	Conventional
No. of Spray Arms	2 (Upper, Lower)
Number of Wash Cycles	6 (Auto, Heavy, Normal, Turbo, Downloaded, Machine Clean)
Number of Wash Options	4 (High Temp, Delay Start, Control Lock, Remote, Wi-Fi)
SenseClean™ Wash System	No
1 Hour Wash and Dry	No
Vario Wash	No
Drying System	Auto Open Door
LoDecibel™ Quiet Operation	52 dBA
End of Cycle Indicator	Beeper + END indication on display
Safety Float Switch (Leaks)	Yes
Tub Insulation	Damping Sheet, Sound Absorbing Material (felt), Base
BPA-Free Nylon Coated Racks and Tines	Yes
Anti-Bacterial Treatment (Drain Hose)	Yes
Balanced Door	Yes
3-Stage Filteration System	No
NSF®-Certified	No

STYLE AND DESIGN	
Status Indicators	Yes (in the middle)
Remaining Time Indicator	LED
Quad Arm Body Coor	Pearl Dark Grey
All Available Colors	Stainless Steel, Black, White
ThinQ® SMART FEATURES	
Wi-Fi Enabled	Yes
ThinQ® Technology	Yes
POWER RATINGS	
Electrical Requirements	120V, 60Hz, 15Amps
Power of Outlet Location	Within 48" of Either Side
Power/ Plug Type	Plug-Only
Drain Hose Length	Within 6ft. of Sink
Drain Location	N/A
Inlet Water Temperature (Min. - Max.)	120° - 149° F
DIMENSIONS / CLEARANCES / WEIGHT	
Product Dimensions (in) (W x H x D)	23 1/2" x 33 5/8" x 22 1/2"
Carton Dimensions (in) (W x H x D)	26 3/8" x 26" x 34 13/16"
Product Weight (Unit/ Carton)	70.5lb / 83.8lb
Depth with Door Open (in)	46 7/8"
Clearances (WxDxH)	24" x 24" x 33 7/8"
LIMITED WARRANTY	
Labor & Parts	1 Year
Control Board and Rack Parts	2 Years
Direct Drive Motor	10 Years
UPC CODES	
LDNPC227S	195174155905
LDNPC227B	195174166710
LDNPC227W	195174166666

© 2025 LG Electronics USA, Inc. All rights reserved. "LG Life's Good" is a registered trademark of LG Corp. All other product and brand names are trademarks or registered trademarks of their respective owners. Design, features and specifications are subject to change without notice. Non-metric weights and measurements are approximate. Some features may require Internet access. Content and services may vary by product and are subject to change without notice. 10/28/2026

LDNPC227_

DIMENSION / CLEARANCES

Back View

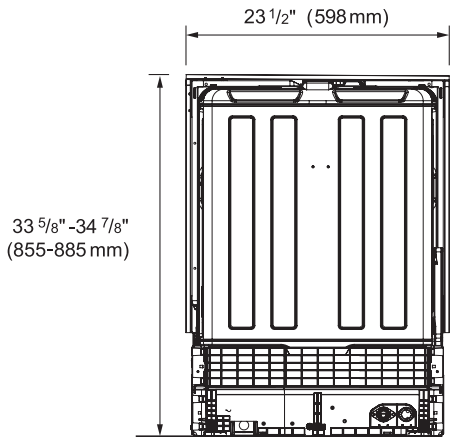

Side View

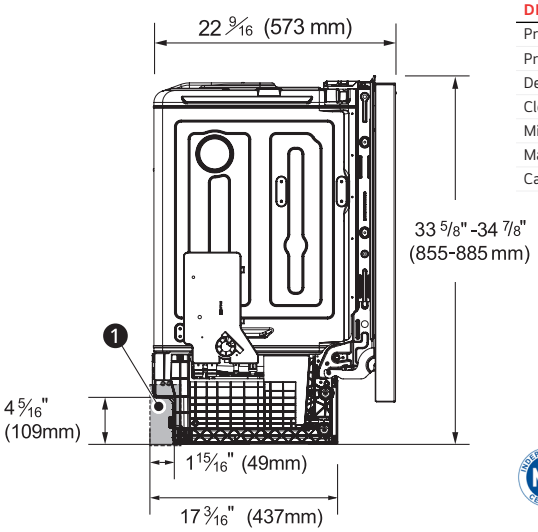

DIMENSIONS / CLEARANCES / WEIGHT	
Product Dimensions (in) (W x H x D)	23 1/2" x 33 5/8" x 22 1/2"
Product Weight	70.5 lbs
Depth with Door Open (in)	46 7/8"
Clearances (WxDxH)	24" x 24" x 33 7/8"
Minimum Height	34 7/8"
Maximum Height	33 5/8"
Carton Dimensions (in) (W x H x D)	26 3/8" x 26" x 34 13/16"

* LG dishwashers are NSF certified when operated on the High Temp Cycle. Certification to NSF / ANSI Standard 184 for residential dishwashers.

DIMENSION / CLEARANCES

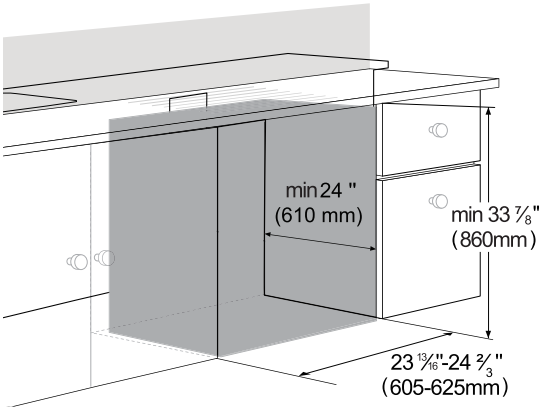

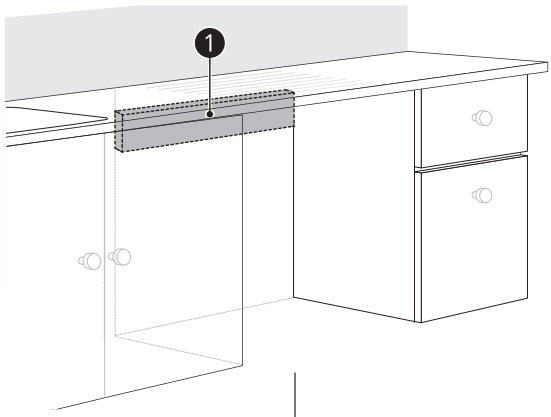

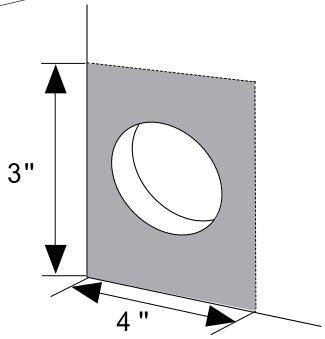

INSTALLATION NOTES

• This dishwasher is designed to fit a standard dishwasher opening. An opening may be needed on both sides to route plumbing and electrical connections.

• Select a location as close to the sink as possible for easy connections to water supply line, drain hose and electrical connection.

• To ensure proper drainage, install the dishwasher no more than 12 ft. (3.65 m) from the sink.

• The location must have sufficient space for the dishwasher door to open easily and provide at least 0.1" (2 mm) between the dishwasher and the cabinet sides.

• If installing the dishwasher in a corner, leave a minimum of 2" (50 mm) between the dishwasher and the adjacent wall.
The adjacent wall must be free of obstructions. For flush installations only, you may remove the cabinet brace ❶ inside the cabinet.

• To allow for proper clearance of plumbing and electrical, use the template included with the literature to determine the clearance on the side of the cabinet where the cabinet meets the back wall. Using a 2 1/2" diameter hole saw, drill a hole in the target area as shown on the template.

© 2025 LG Electronics USA, Inc. All rights reserved. "LG Life's Good" is a registered trademark of LG Corp. All other product and brand names are trademarks or registered trademarks of their respective owners. Design, features and specifications are subject to change without notice. Non-metric weights and measurements are approximate. Some features may require Internet access. Content and services may vary by product and are subject to change without notice. 04/13/2026