OVEN
INSTALLATION GUIDE

Components required	3
Accessing your product specifications	4
Unpack product	7
Remove door	8
Connect power	10
Position in cavity	15
Refit door	16
Align to surroundings	17
Secure to cavity	18
Refit shelves	19
Checklist	20

US CA

MINIMAL

OS24NAMHUB5, OS24NAMHUNB5, OS24NAMHUNG5, OS24NAMVUB5, OS24NAMVUG5, OB24SAMPTB5, OB24SAMPUB5, OB24SAMPUG5, OB24SAMPUNB5, OB24SAMPUNG5, OS24SAMHUB5, OS24SAMHUNB5, OS24SAMHUNG5

CONTEMPORARY

OS24NACVUDX5, OB24SACGB5, OB24SACGX5, OB24SACPTDX5, OB24SACPUDX5

COMPONENTS REQUIRED

TOOLS

Not supplied

- ☐ Powered driver
- ☐ Cross-head screwdriver

PARTS

Supplied

- ☐ Screws (2)
- ☐ Cabinetry trim (some models only)

All imagery shown in this guide is representative. Your product may differ.

ACCESSING YOUR PRODUCT SPECIFICATIONS

For full product, cabinetry and service specifications, refer to the Planning Guide. To access the Planning Guide, scan the QR code or visit fisherpaykel.com/specify. Search by appliance type, product name or model code.

STANDARD (MINIMAL & CONTEMPORARY MODELS)

OB24SACGB5, OB24SACGX5, OB24SACPTDX5, OB24SACPUDX5, OB24SAMPTB5, OB24SAMPUB5, OB24SAMPUG5, OB24SAMPUNB5, OB24SAMPUNG5, OS24SAMHUB5, OS24SAMHUNB5, OS24SAMHUNG5

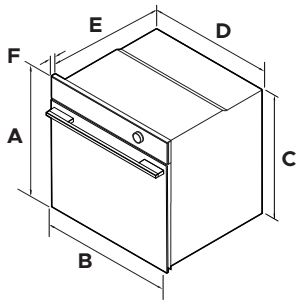

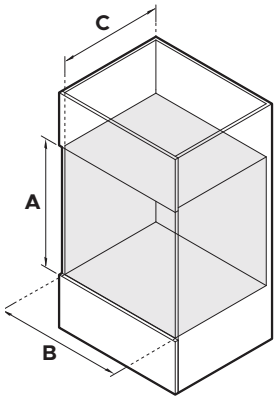

PRODUCT DIMENSIONS		inch	mm
A	Overall height	23 9/16	598
B	Overall width	23 7/16	596
C	Chassis height	22 5/8	575
D	Chassis width	21 7/8	556
E	Chassis depth	21 7/16	545
F	Control panel thickness	13/16	20

CAVITY DIMENSIONS		inch	mm
A	Minimum inside height of cavity	22 13/16	580
B	Minimum inside width of cavity	22 1/16	560
C	Minimum inside depth of cavity	21 5/8	550
	Recommened cabinet width	23 5/8	600

ACCESSING YOUR PRODUCT SPECIFICATIONS

For full product, cabinetry and service specifications, refer to the Planning Guide. To access the Planning Guide, scan the QR code or visit fisherpaykel.com/specify. Search by appliance type, product name or model code.

COMPACT (MINIMAL & CONTEMPORARY MODELS)

OS24NACVUDX5, OS24NAMHUB5, OS24NAMHUNB5, OS24NAMHUNG5, OS24NAMVUB5, OS24NAMVUG5

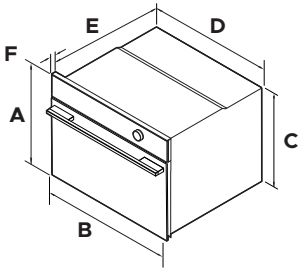

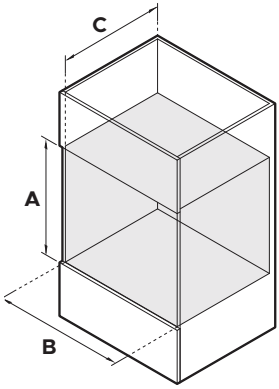

PRODUCT DIMENSIONS		inch	mm
A	Overall height	18	458
B	Overall width	23 7/16	596
C	Chassis height	17 1/8	435
D	Chassis width	21 7/8	556
E	Chassis depth	21 7/16	545
F	Control panel thickness	13/16	20

CAVITY DIMENSIONS		inch	mm
A	Minimum inside height of cavity	17 5/16	440
B	Minimum inside width of cavity	22 1/16	560
C	Minimum inside depth of cavity	21 5/8	550
	Recommened cabinet width	18 1/18	600

fisherpaykel.com/specify

1. Refer to the Planning Guide for cabinetry, cavity, panel and service specifications.

For light cabinetry, ensure clashing has been considered and installed.

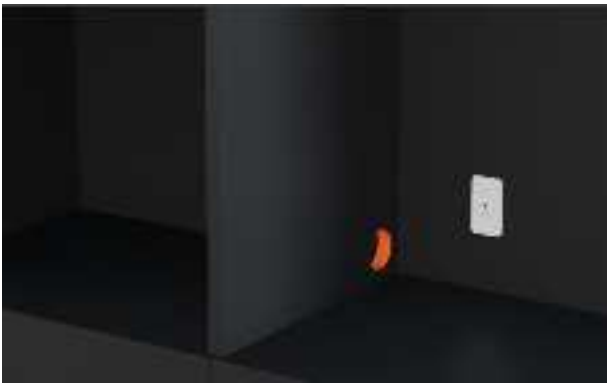

2. Ensure the cabinet meets the minimum cavity specifications required.

UNPACK PRODUCT

- Do not lift or move the product using the door handle.
- Keep all packing materials until the unit has been inspected.
- Inspect the product to ensure there is no shipping damage. If any damage is detected contact the dealer or retailer you brought the product from to report the damage.
- Fisher & Paykel is not responsible for shipping damage.

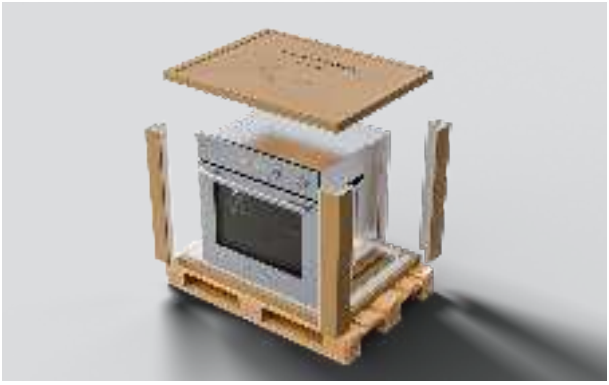

1. Cut and remove all straps and outer packaging. Lift off the carton sleeve and remove any internal packing materials.



2. Slide out the front packing support, then lift the oven up and forward to remove it from the pallet

Dispose of packaging responsibly.



1. Open the door and remove all cable ties and packaging holding the oven shelves in place.

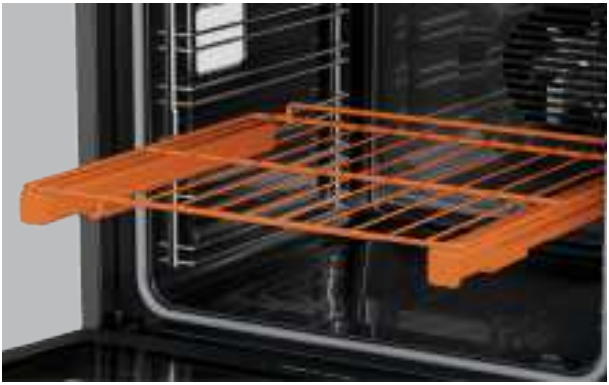

2. Grip the shelves at the front, making sure to hold the wire shelf and frame together. Lift upwards and pull out from the oven. For more guidance on removing the shelves, refer to page 14.



UNLOCKED



LOCKED

3. Locate the hinge locks on either side of the door. Push the locks upwards to release.



4. Holding the door on both sides, partially close the door and carefully pull the door away from the hinges.

SPECIFICATIONS	OS24 MODELS
Dedicated Circuit (A)	20
Rated Power (W)	3200 / 4200
Supply (Hz)	60
Voltage (V)	208 / 240
Connection	Hard wired (conduit supplied)

THREE WIRE CONNECTION

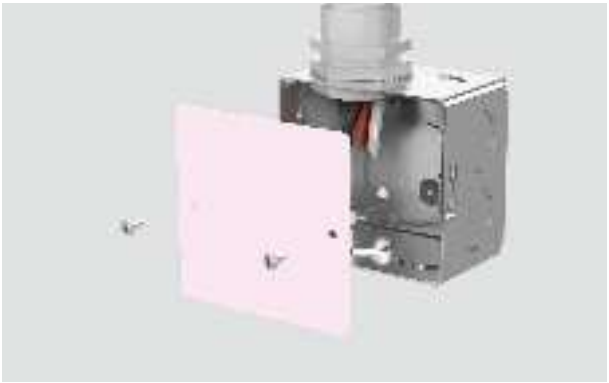

1. Disconnect the power supply and remove the junction box cover.



2. Connect the oven cable to the junction box through the U.L-listed conduit connector.



3. Connect the two black wires together with twist-on connectors and the two red wires together with twist-on connectors.

Connect electrical connection according to local codes and ordinances.

THREE WIRE CONNECTION

If local codes DO NOT PERMIT connecting the cabinet-grounding conductor to the neutral (white) wire in junction box.



1. Separate the factory-taped green and white oven cable wires. If junction box is grounded, connect the green wire to the metal junction box with a screw before connecting the white oven cable wire to the neutral (white) wire in juction box.

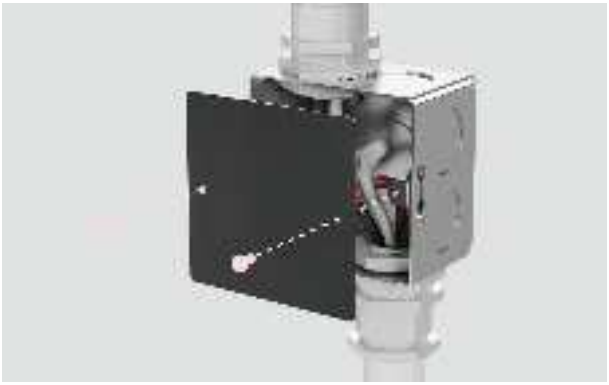

2. Replace the junction box cover.

THREE WIRE CONNECTION

If local codes permit connecting the cabinet-grounding conductor to the neutral (white) wire in junction box.



1. Connect the factory-taped gree and white oven wires to the neutral (white) wire in the junction box.

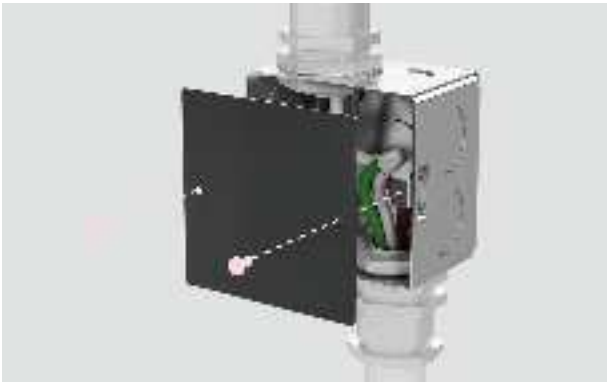

2. Replace the junction box cover.

FOUR WIRE CONNECTION

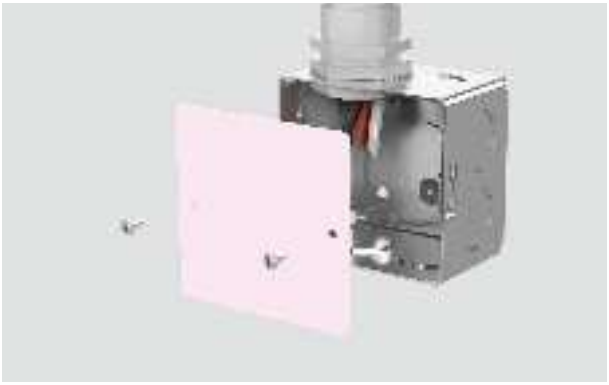

1. Disconnect the power supply and remove the junction box cover.



2. Connect the oven cable to the junction box through the U.L-listed conduit connector.



3. Connect the two black wires together with twist-on connectors and the two red wires together with twist-on connectors.

Connect electrical connection according to local codes and ordinances.

FOUR WIRE CONNECTION



1. Separate the green and white oven cable wires. Connect the white oven cable wire to the neutral (white) wire in junction box.



2. Connect the green grounding oven cable wire to the (green) grounding wire in the junction box. Do not connect the green grounding wire to the neutral (white) wire in junction box.

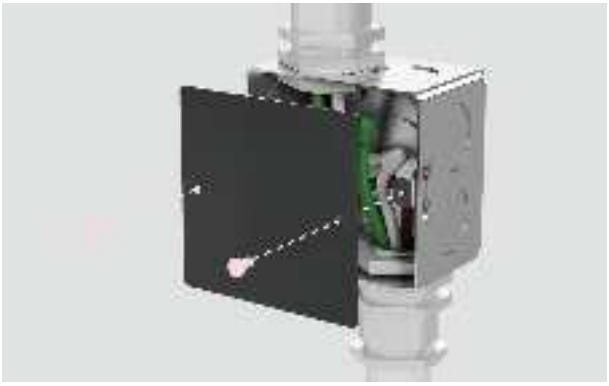

3. Replace the junction box cover.

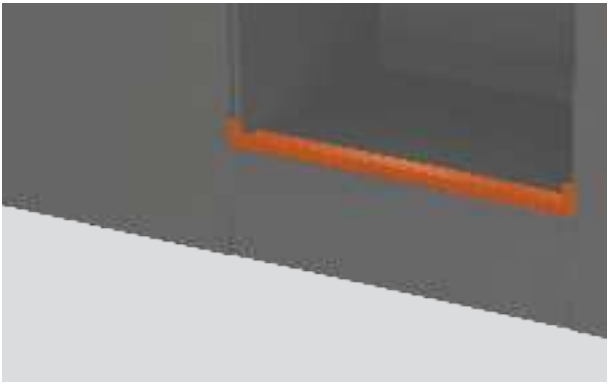

1. For light cabinetry, the supplied trim can be used to enhance clashing finish. To install, remove the trim adhesive and press to secure to cavity*.



2. Apply protective tape to adjacent cabinetry panels before lifting product into place.

*To purchase cabinetry trim as an optional accessory, visit fisherpaykel.com



1. Holding the door on both sides, carefully lift door back onto the hinges.



2. Open the door fully and push each locking lever down and lock into place.



UNLOCKED



LOCKED

3. Ensure both hinges are fully locked before shutting the door.



1. Align oven with surrounding cabinetry and appliances.



2. Ensure the vertical gaps are even before making any horizontal adjustments.



1. Using the product as a guide, pre-drill 2 x 3mm pilot holes.



2. Secure oven to cavity using the 2 x screws provided.



Sliding shelves

Place shelves back into the oven at the desired level. Ensure shelves are level and correctly positioned with the guard rail at the back.



Wire shelves

Slide shelves into the cavity.



Clip-on runners

Fit the top clips over the side ladder. The front clip should be fitted as close to the front of the side ladder as possible. Click the bottom clips into place.

Installation checks

- ☐ All clearances are correct.
- ☐ The product is level and securely fitted in the cabinetry.
- ☐ Check the lower trim is undamaged.
- ☐ All internal packaging is removed.
- ☐ The isolating switch can be easily reached.

Test operation

- ☐ Turn product on at the power supply.
- ☐ Follow the on-screen guidance to connect the product to Wi-Fi and set the clock.

Complete and keep for safe reference:

Model _____

Serial no. _____

Purchase date _____

Purchaser _____

Dealer address _____

Installer's name _____

Installer's signature _____

Installation company _____

Installation date _____

FISHERPAYKEL.COM

© Fisher & Paykel Appliances 2026. All rights reserved.

The models shown in this guide may not be available in all markets and are subject to change at any time.

The product specifications in this guide apply to the specific products and models described at the date of issue. Under our policy of continuous product improvement, these specifications may change at any time.

For current details about model and specification availability in your country, please go to our website or contact your local Fisher & Paykel dealer.

433918A 07.26