24" MINIMAL OVENS AND COMPANIONS

PLANNING GUIDE

SERIES 7 SELF-CLEANING OVEN | OB24SAMPTB5
SERIES 7 COMPACT CONVECTION-SPEED OVEN | OM24NMTB5
SERIES 9 WARMING DRAWER | WB24SMB3

© FISHER & PAYKEL APPLIANCES LIMITED 2026

INTRODUCTION

This comprehensive planning guide provides you with the framework and tools to achieve your desired design outcome with Fisher & Paykel appliances. In this guide, you will find a range of conceptual, detailed, and dimensional product information to bring your ideas to life and create spaces that truly reflect your vision.

SUPPORT

For additional design planning and installation support please contact the Fisher & Paykel design support team.
designsupport@fisherpaykel.com

NOTES

The models shown in this Planning Guide may not be available in all markets and are subject to change at any time. Refer to our website fisherpaykel.com for the latest document version. Product specifications may vary from those shown.
This Planning Guide should not be used as installation guidance for any product. Specific installation guidance will be available with the product on delivery and on our website.

CONTENTS

CONCEPT DESIGN — High-level product information for the initial stages of conceptualising and refining your design.

DEVELOPED AND DETAILED DESIGN — Detailed information, including product specs and dimensions, to support you in the advanced design stages.

CONCEPT DESIGN

DESIGN CHOICE
- Styles
- Minimal Style **5**
- Installation Options **6**
- Overview **7**

SPECIFICATION GUIDE
- Self-Cleaning Oven **9**
- Compact Convection-Speed Oven **10**
- Warming Drawer **11**
- Dimensions **12**
- Services **13**

DEVELOPED AND DETAILED DESIGN

DATA SHEETS
- Self-Cleaning Oven
- Compact Convection-Speed Oven **16**
- Warming Drawer **17**

DETAILED DESIGN **PAGE**

ERATIONS
- tion **19**
- Ventilation **20**
- Stack Height **21**

SERVICES
- Power Connection and Electrical **23**

© FISHER & PAYKEL APPLIANCES LIMITED 2026

DESIGN CHOICE

© FISHER & PAYKEL APPLIANCES LIMITED 2026



MINIMAL STYLE - HANDLELESS

Celebrating a singular aesthetic to blend seamlessly into the kitchen, Minimal style ovens feature subtle textural and tonal contrasts for a sense of refinement and purity.



MINIMAL STYLE

This Planning Guide is for the Minimal Style featuring 24" Ovens and Companions. For information on other styles, please visit the Fisher and Paykel website. To see what models are available, head to the 'Overview' section in this Planning Guide.



CONTEMPORARY STYLE

Defined by clean lines and timeless design cues, Contemporary style ovens bring a sense of balance and refinement. A versatile aesthetic that complements a range of kitchen styles.

The models shown in this Planning Guide may not be available in all markets and are subject to change at any time. Product specifications may vary from those shown. This Planning Guide should not be used as installation guidance for any product. Further information is required to safely and correctly install the products featured here. Specific installation guidance will be available with the product on delivery and on our website fisherpaykel.com

FINISH



Black

OVENS

SELF-CLEANING

CONVECTION-SPEED

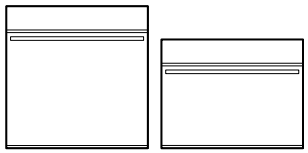

COMPANIONS

WARMING DRAWER



INSTALLATION OPTIONS

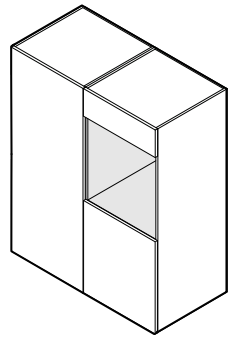

Installation in wall

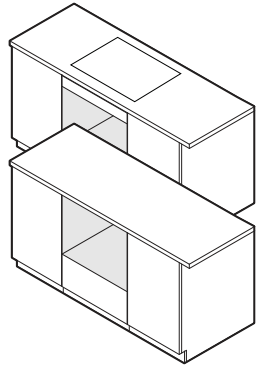

Installation under-bench

The models shown in this Planning Guide may not be available in all markets and are subject to change at any time. Product specifications may vary from those shown. This Planning Guide should not be used as installation guidance for any product. Further information is required to safely and correctly install the products featured here. Specific installation guidance will be available with the product on delivery and on our website fisherpaykel.com

© FISHER & PAYKEL APPLIANCES LIMITED 2026

CONSIDERATIONS

Different configurations possible, consider heights for grid and row installations.

STACK HEIGHT

Stack Height is overall product height with minimum clearance above appliance front panel to upper cabinetry front panel or appliance.

STACKED INSTALLATION

Stack Height
41 3/4" (1060mm)

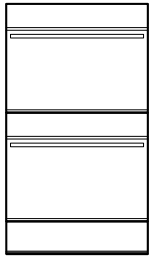

Stack Height
47 1/4" (1200mm)

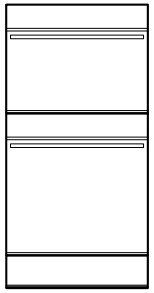

GRID INSTALLATION

Stack Height
23 5/8" (600mm)

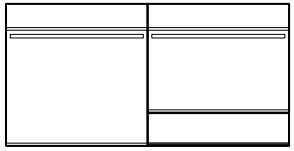

ROW INSTALLATION

Stack Height
23 5/8" (600mm)

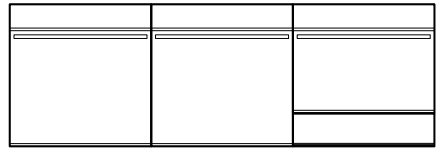

The models shown in this Planning Guide may not be available in all markets and are subject to change at any time. Product specifications may vary from those shown. This Planning Guide should not be used as installation guidance for any product. Further information is required to safely and correctly install the products featured here. Specific installation guidance will be available with the product on delivery and on our website fisherpaykel.com

FRONT ELEVATION

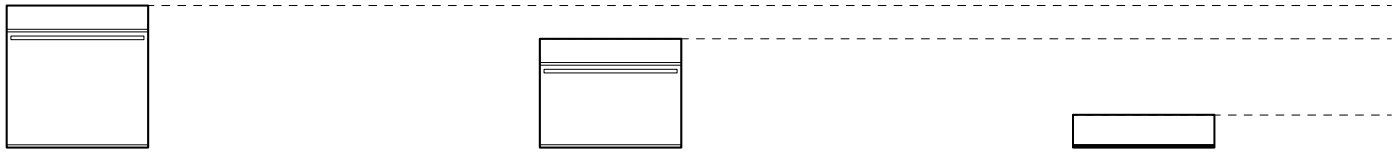

SIDE ELEVATION

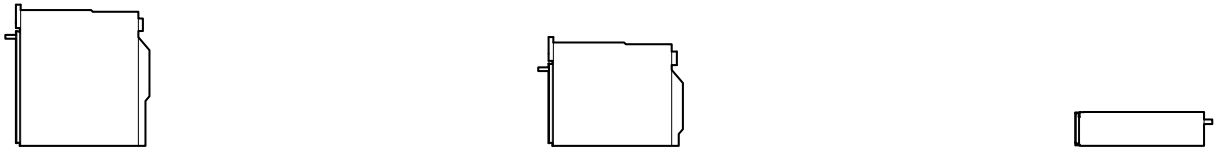



	SELF-CLEANING OVEN	COMPACT CONVECTION-SPEED OVEN	WARMING DRAWER
Series	Series 7	Series 7	Series 9
Black	OB24SAMPTB5	OM24NMTB5	WB24SMB3
Interface	5" Touchscreen	5" Touchscreen	-
Overall Height	23 9/16" (598mm)	18" (458mm)	5 1/2" (140mm)
Overall Width	23 7/16" (596mm)	23 7/16" (596mm)	23 7/16" (596mm)
Control Panel/Front Panel Thickness	13/16" (20mm)	13/16" (20mm)	13/16" (20mm)

The models shown in this Planning Guide may not be available in all markets and are subject to change at any time. Product specifications may vary from those shown. This Planning Guide should not be used as installation guidance for any product. Further information is required to safely and correctly install the products featured here. Specific installation guidance will be available with the product on delivery and on our website fisherpaykel.com

SPECIFICATION GUIDE

SERIES 7 & 9

© FISHER & PAYKEL APPLIANCES LIMITED 2026





OVERVIEW

Designed to complement Minimal style appliances, this oven delivers a seamless, flush finish – ideal for modern kitchen designs. The pyrolytic self-cleaning function breaks down food residue for an easy clean, while precise cooking methods with temperature and heat type recommendations for a wide range of food types are easily accessed via the touch screen and SmartHQ™.

PRODUCTS

OB24SAMPTB5 - Black
24" Series 7 Minimal Self-Cleaning Oven

SERIES & STYLE

Series 7
Minimal

FEATURES

1. Minimal style is designed to fit flush with cabinetry. Matches our Minimal style family of appliances
2. Self-cleaning pyrolytic function breaks down food residue for an easy clean
3. Premium soft open and close door
4. Generous 2.5 cu ft useable capacity
5. 5” touchscreen is intuitive and easy to use
6. Create perfect results with precise cooking methods, with temperature and heat type recommendations for your food type
7. Moisture control and even heat distribution thanks to ActiveVent™ and AeroTech™ technology
8. Includes a wired temperature sensor for real-time monitoring of cooking temperatures
9. Connected capability via the SmartHQ™ app gives control & visibility from anywhere at anytime

ACCESSORIES

1. Self-cleaning Proof Side Ladders
2. Telescopic Sliding Runners
3. Wire Shelf (x2)

ACCESSORIES

4. Multi-functional Air Fry Tray
5. Roasting Dish
6. Wired Temperature Sensor

The models shown in this Planning Guide may not be available in all markets and are subject to change at any time. Product specifications may vary from those shown. This Planning Guide should not be used as installation guidance for any product. Further information is required to safely and correctly install the products featured here. Specific installation guidance will be available with the product on delivery and on our website fisherpaykel.com





OVERVIEW

Designed to complement Minimal style appliances, this Convection-Speed Oven delivers a seamless, flush finish – ideal for modern kitchen designs. Versatile cooking options including microwave or convection offer efficient heating across a variety of dishes. Precise cooking methods with temperature and heat type recommendations for a wide range of food types are easily accessed via the touch screen and SmartHQ™.

PRODUCTS

OM24NMTB5 - Black
24" Series 7 Minimal Compact Convection-Speed Oven

SERIES & STYLE

Series 7
Minimal

FEATURES

1. Minimal style is designed to fit flush with cabinetry. Matches our Minimal style family of appliances
2. Combines fast microwave cooking with even convection heat for versatile, efficient heating across a variety of dishes
3. With soft open and close, the CoolTouch door is safe to touch from the outside - protecting hands and surrounding cabinetry
4. Compact 1.3 cu ft useable capacity
5. 5” touchscreen is intuitive and easy to use
6. Create perfect results with precise cooking methods, with temperature and heat type recommendations for your food type
7. Versatile microwave only, convection only or combi-microwave functions to suit a range of cooking styles
8. Includes a wired temperature sensor for real-time monitoring of cooking temperatures
9. Connected capability via the SmartHQ™ app gives control & visibility from anywhere at anytime

ACCESSORIES

1. Chrome Side Ladders
2. Wire Shelf
3. Step Down Wire Shelf
4. Glass Tray
5. Broil Rack
6. Wired Temperature Sensor

The models shown in this Planning Guide may not be available in all markets and are subject to change at any time. Product specifications may vary from those shown. This Planning Guide should not be used as installation guidance for any product. Further information is required to safely and correctly install the products featured here. Specific installation guidance will be available with the product on delivery and on our website fisherpaykel.com





OVERVIEW

Designed to complement Minimal style appliances, this Warming Drawer delivers a seamless, flush finish – ideal for modern kitchen designs. Featuring a push-to-open mechanism, intuitive touch controls, and a smooth glass base for easy cleaning. With six tailored programmes and space for 6 place settings, it keeps meals ready to serve.

PRODUCTS

WB24SMB3 - Black
24" Series 9 Minimal Warming Drawer

SERIES & STYLE

Series 9
Minimal

FEATURES

1. Minimal style is designed to fit flush with cabinetry. Matches our Minimal style family of appliances
2. Push-to-open drawer, designed for added convenience
3. Simple and intuitive touch controls for effortless operation
4. Easy-to-clean glass base
5. Automatic switch-off and delayed start functionality to help keep dishes warm until it is time to serve
6. Room for 6 standard-sized place settings
7. Six tailored programmes including Warming, Proofing, Dehydrating, and Slow Cooking offer convenience and flexibility

The models shown in this Planning Guide may not be available in all markets and are subject to change at any time. Product specifications may vary from those shown. This Planning Guide should not be used as installation guidance for any product. Further information is required to safely and correctly install the products featured here. Specific installation guidance will be available with the product on delivery and on our website fisherpaykel.com

PRODUCT DIMENSIONS

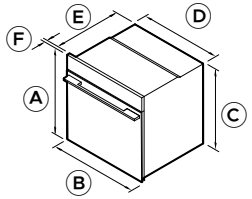

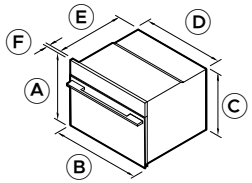

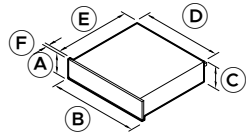

CAVITY DIMENSIONS

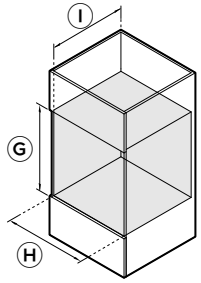

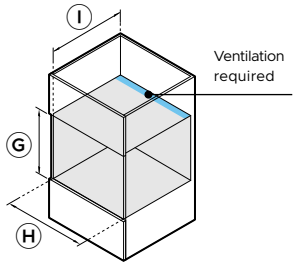

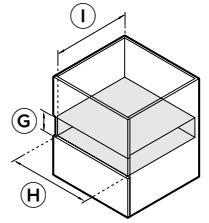

		SELF-CLEANING OVEN OB24SAMPTB5		COMPACT CONVECTION-SPEED OVEN OM24NMTB5		WARMING DRAWER WB24SMB3	
PRODUCT DIMENSIONS		inch	mm	inch	mm	inch	mm
A	Overall product height	23 9/16	598	18	458	5 1/2	140
B	Overall product width	23 7/16	596	23 7/16	596	23 7/16	596
C	Chassis height	22 5/8	575	17 1/8	435	5 1/2	140
D	Chassis width	21 7/8	556	21 7/8	556	21 3/8	543
E	Chassis depth	21 7/16	545	21 7/16	545	21 9/17*	547*
F	Front frame depth (excludes handle)	13/16	20	13/16	20	13/16	20
	Front panel height	-	-	-	-	5 3/8	136
	Front panel width	-	-	-	-	23 7/16	596
	Door open depth at 90° (from product front)	18 1/4	463	12 3/4	324	-	-
	Drawer extension	-	-	-	-	max 16 5/16	max 414

*Including power plug.

CAVITY DIMENSIONS		inch	mm	inch	mm	inch	mm
G	Cavity height	min 22 13/16	min 580	min 17 5/16	min 440	min 5 9/16	min 142
H	Cavity width	min 22 1/16	min 560	min 22 1/16	min 560	min 22 1/16	min 560
I	Cavity depth (from chassis front datum)	min 21 5/8	min 550	min 21 5/8*	min 550*	min 21 5/8	min 550

*Minimum total ventilation area of 43.4in (280cm²) is required. The ventilation opening must be located at the rear of the cavity and may be positioned at the base, sides, or top of the cavity.
Note: 24" Fisher & Paykel ovens can be installed directly onto the drawer. An intermediate shelf is not required.

The models shown in this Planning Guide may not be available in all markets and are subject to change at any time. Product specifications may vary from those shown. This Planning Guide should not be used as installation guidance for any product. Further information is required to safely and correctly install the products featured here. Specific installation guidance will be available with the product on delivery and on our website fisherpaykel.com

ISOMETRIC VIEW

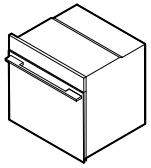

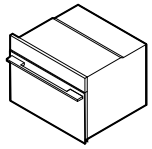

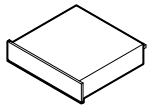

	SELF-CLEANING OVEN OB24SAMPTB5	COMPACT CONVECTION-SPEED OVEN OM24NMTB5	WARMING DRAWER WB24SMB3
PRODUCT REQUIREMENTS			
Dedicated Circuit (A)	20	20	15
Rated Power (W)	4200 / 3200	3300 / 3900	930
Supply (Hz)	60	60	60
Voltage (V)	208 / 240	208 / 240	120
Connection	Hard-wired 48" (1220mm)*	Hard-wired min 70 7/8" (1800mm)*	Flex cord 70 7/8" (1800mm)*

*Supplied with product.
Note: For multi-residential installations, use the Rated Power to calculate the demand.

CAPACITY			
Total Oven capacity	3cu ft (85L)	1.7cu ft (49L)	-
Total water tank capacity	-	-	-

Note: All Coffee Makers has internal water tanks which need to be filled manually. No external water supply is required.

WEIGHTS			
Packaged	119lb (54kg)	106lb (48kg)	40lb (18kg)
Unpackaged	99lb (45kg)	84lb (38kg)	37lb (17kg)

The models shown in this Planning Guide may not be available in all markets and are subject to change at any time. Product specifications may vary from those shown. This Planning Guide should not be used as installation guidance for any product. Further information is required to safely and correctly install the products featured here. Specific installation guidance will be available with the product on delivery and on our website fisherpaykel.com

DATA SHEETS

© FISHER & PAYKEL APPLIANCES LIMITED 2026

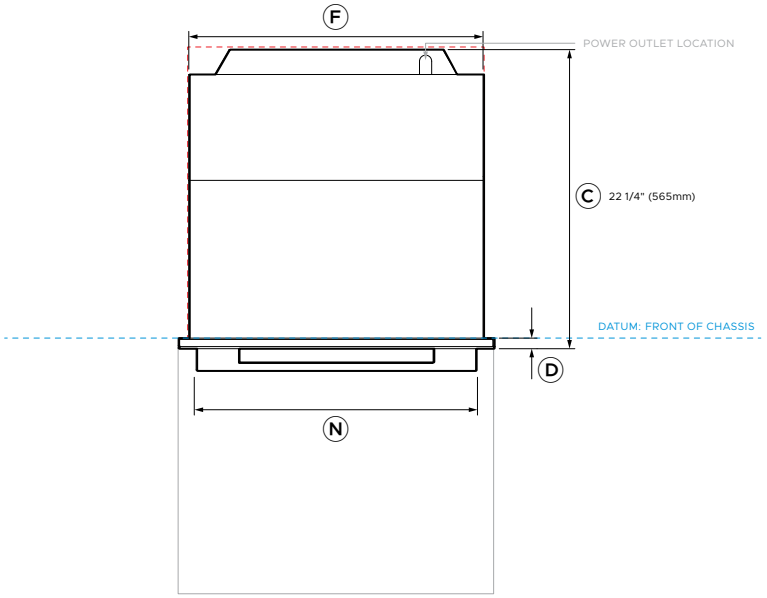

PLAN VIEW

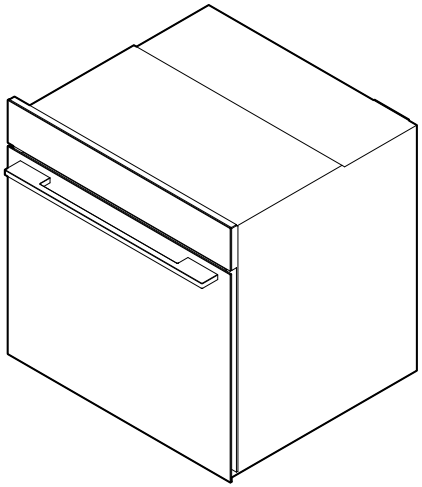

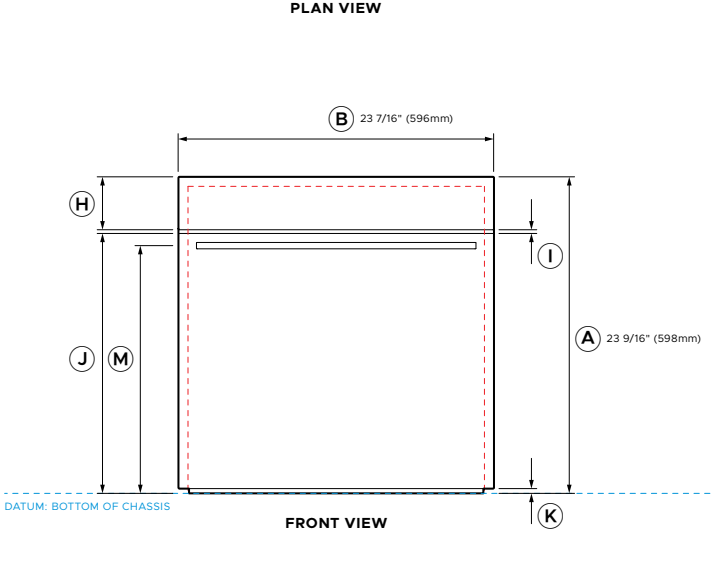

FRONT VIEW

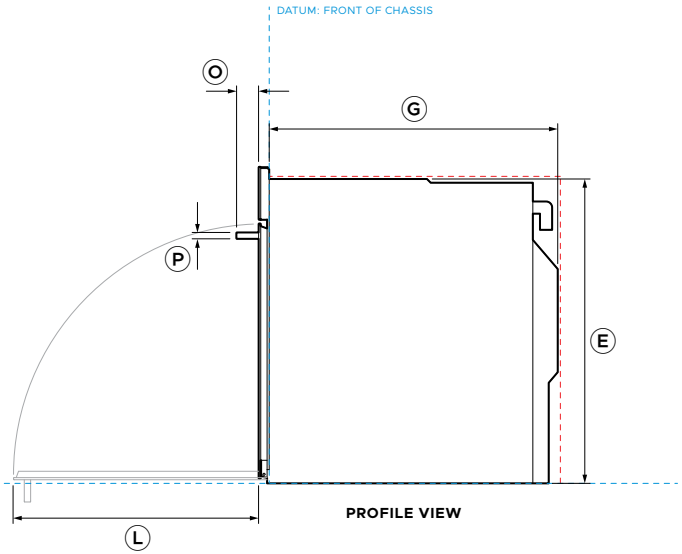

PROFILE VIEW

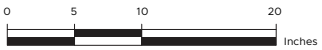

Model no:

OB24SAMPTB5 24" Series 7 Minimal Self-Cleaning Oven - Black

Product Dimensions		**inch**	**mm**
A	Overall product height	23 9/16	598
B	Overall product width	23 7/16	596
C	Overall product depth (excludes handle)	22 1/4	565
D	Front frame depth (excludes handle)	13/16	20
E	Chassis height	22 5/8	575
F	Chassis width	21 7/8	556
G	Chassis depth	21 7/16	545
H	Control panel height	3 15/16	100
I	Door-to-control panel gap	9/32	7
J	Door upper edge height (from chassis base datum)	19 5/16	491
K	Door lower edge height (from chassis base datum)	3/8	9
L	Door open depth at 90° (from product front)	8 1/4	463
M	Handle centreline height (from chassis base datum)	18 7/16	468
N	Handle width	20 13/16	528
O	Handle depth (projection)	1 21/32	42
P	Handle thickness	15/32	12

Minimum Clearances	**inch**	**mm**
Cavity height	min 22 13/16	min 580
Cavity width	min 22 1/16	min 560
Cavity depth (from chassis front datum)	min 21 5/8	min 550
Front frame clearance - top & sides	min 1/16	min 2

- - - - - INDICATES PRODUCT DATUM
- - - - - INDICATES CABINETRY CLEARANCES

IMPORTANT NOTE: Throughout this guide, dimensions may vary by ±2mm (1/16''). Please read the installation manual for detailed information on installing the product. For full installation instructions & specifications visit fisherpaykel.com

© FISHER & PAYKEL APPLIANCES LIMITED 2026

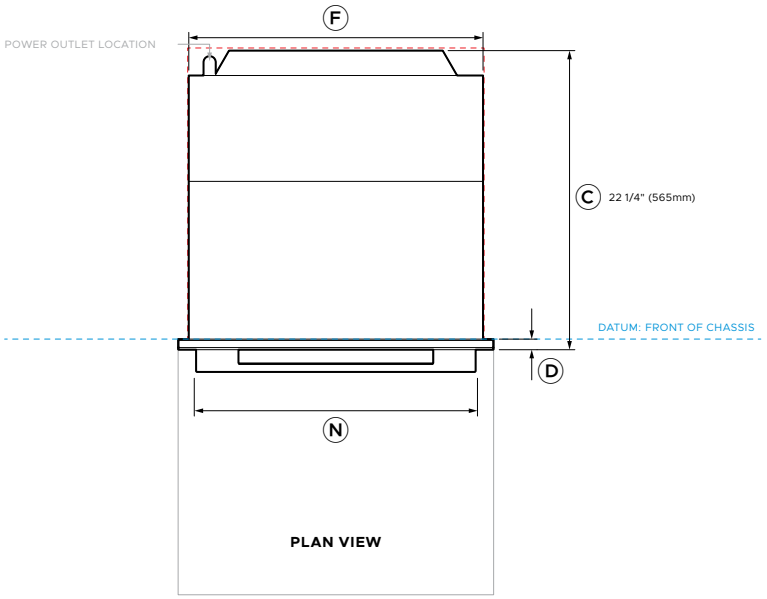

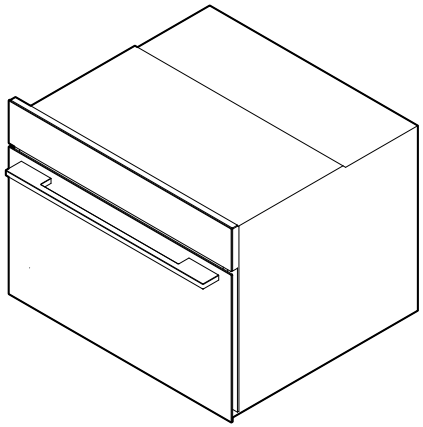

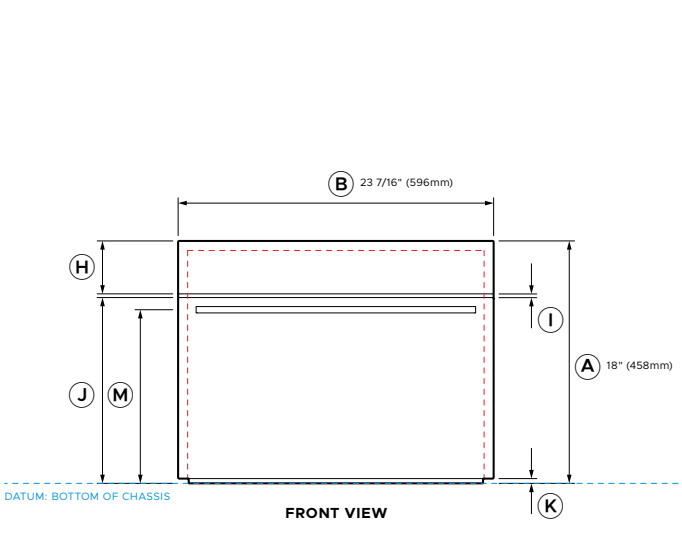

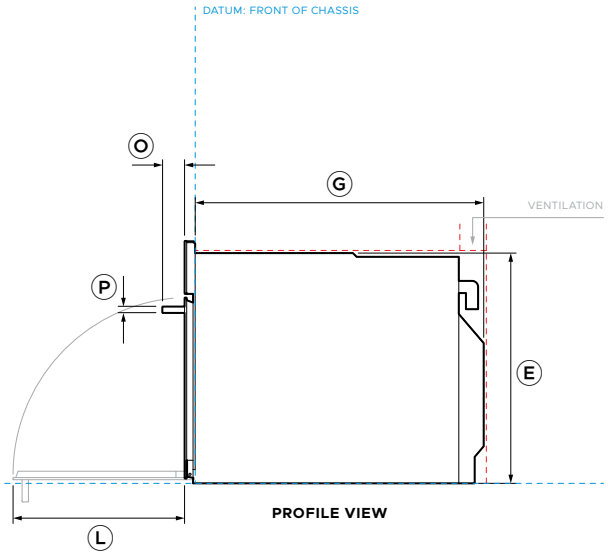

0 5 10 20 Inches

Model no:

OM24NMTB5	24" Series 7 Minimal Compact Convection-Speed Oven - Black

Product Dimensions		**inch**	**mm**
A	Overall product height	18	458
B	Overall product width	23 7/16	596
C	Overall product depth (excludes handle)	22 1/4	565
D	Front frame depth (excludes handle)	13/16	20
E	Chassis height	17 1/8	435
F	Chassis width	21 7/8	556
G	Chassis depth	21 7/16	545
H	Control panel height	3 15/16	100
I	Door-to-control panel gap	9/32	7
J	Door upper edge height (from chassis base datum)	13 13/16	351
K	Door lower edge height (from chassis base datum)	3/8	9
L	Door open depth at 90° (from product front)	12 3/4	324
M	Handle centreline height (from chassis base datum)	12 29/32	328
N	Handle width	20 13/16	528
O	Handle depth (projection)	1 21/32	42
P	Handle thickness	15/32	12

Minimum Clearances	**inch**	**mm**
Cavity height	min 17 5/16	min 440
Cavity width	min 22 1/16	min 560
Cavity depth (from chassis front datum)	min 21 5/8	min 550
Front frame clearance - top & sides	min 1/16	min 2

Ventilation Requirements	**inch**	**mm**
Rear ventilation opening height*	min 2	min 50
Rear ventilation opening width*	min 22 1/16	min 560

*Minimum total ventilation area of 43.4in (280cm²) is required. The ventilation opening must be located at the rear of the cavity and may be positioned at the base, sides, or top of the cavity.

- - - - - INDICATES PRODUCT DATUM
- - - - - INDICATES CABINETRY CLEARANCES

IMPORTANT NOTE: Throughout this guide, dimensions may vary by ±2mm (1/16''). Please read the installation manual for detailed information on installing the product. For full installation instructions & specifications visit fisherpaykel.com

© FISHER & PAYKEL APPLIANCES LIMITED 2026

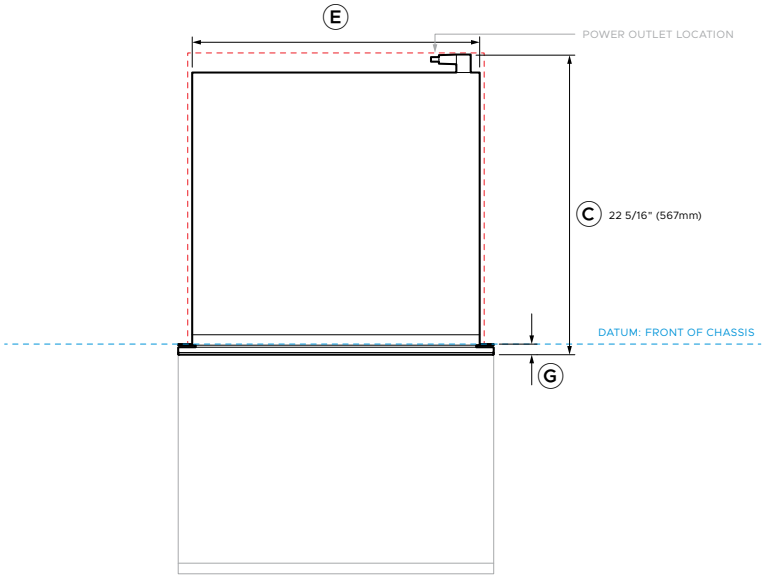

PLAN VIEW

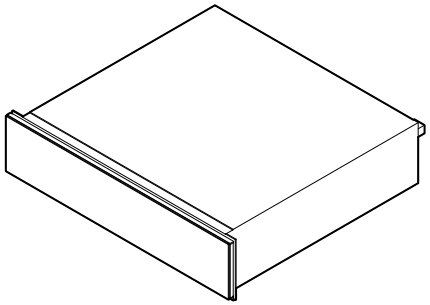

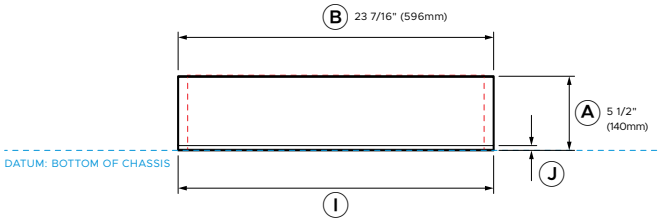

FRONT VIEW

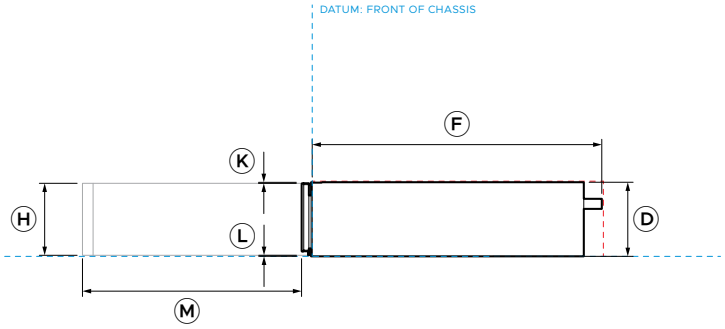

PROFILE VIEW

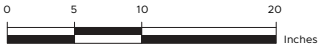

Model no:

WB24SMB3 24" Series 9 Minimal Warming Drawer - Black

Product Dimensions		**inch**	**mm**
A	Overall product height	5 1/2	140
B	Overall product width	23 7/16	596
C	Overall product depth (includes power plug)	22 5/16	567
D	Chassis height	5 1/2	140
E	Chassis width	21 3/8	543
F	Chassis depth	21 9/17	547
G	Front frame depth (includes flange and front panel)	13/16	20
H	Front panel height	5 3/8	136
I	Front panel width	23 7/16	596
J	Front panel lower visual edge height (from chassis base datum)	3/8	9
K	Front panel upper edge to top of chassis	1/16	2
L	Front panel lower true edge height (from chassis base datum)	1/16	2
M	Drawer extension	max 16 5/16	max 414

Minimum Clearances	**inch**	**mm**
Cavity height		
- standalone installation	min 5 9/16	min 142
- stack installation	5 1/2	140
Cavity width	min 22 1/16	min 560
Cavity depth (from chassis front datum)	min 21 5/8	min 550
Front frame clearance - top & sides	min 1/16	min 2

Note: 24" Fisher & Paykel ovens can be installed directly onto the drawer. An intermediate shelf is not required.

- - - - - - INDICATES PRODUCT DATUM
- - - - - - INDICATES CABINETRY CLEARANCES

IMPORTANT NOTE: Throughout this guide, dimensions may vary by ±2mm (1/16''). Please read the installation manual for detailed information on installing the product. For full installation instructions & specifications visit fisherpaykel.com

© FISHER & PAYKEL APPLIANCES LIMITED 2026

PLANNING CONSIDERATIONS

© FISHER & PAYKEL APPLIANCES LIMITED 2026

CABINETRY CLEARANCES

CLEARANCES		inch	mm
A	Front/custom panel clearance - sides	min 1/16	min 2
B	Front/custom panel clearance - top	min 1/16	min 2

UNDERBENCH

If installing a cooktop above the oven, ensure adequate clearance is provided for the cooktop as per the cooktop manufacturer's instructions.

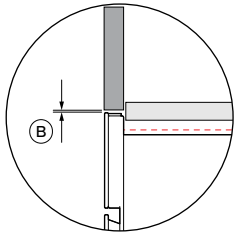

DETAIL 1
PROFILE VIEW

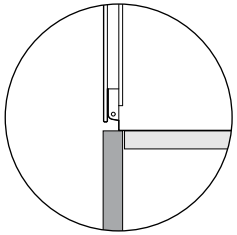

DETAIL 2
PROFILE VIEW

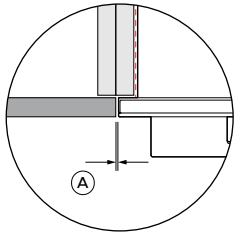

DETAIL 3
PLAN VIEW

Products require no bottom clearance between product to cabinetry front panel or appliance.

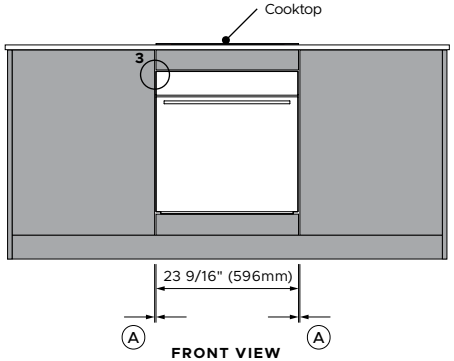

FRONT VIEW

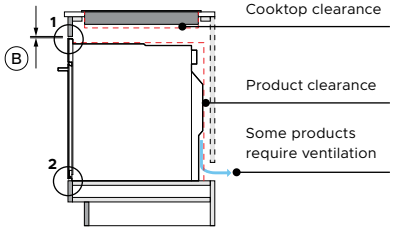

PROFILE VIEW

INSTALLATION

SINGLE

Head to the 'Data Sheets' section in this Planning Guide for details.

STACKED OR GRID

Head to the 'Stack Height' section in this Planning Guide for details.

BLACK CLASHING

Black edge clashing is recommended on all front facing panels and openings at product locations, and on side cabinet panels where a rebated exists.

DIVIDING SHELF

If the appliance front panel is thicker than the cabinetry front panel, adjust the dividing shelf depth to ensure the oven sits flush with the front of the cabinetry.

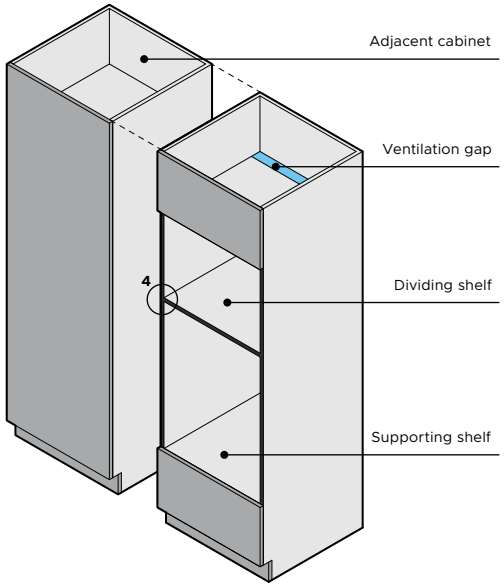

OVEN CABINETRY TRIM (OPTIONAL)

An optional black cabinetry trim is supplied with all ovens.

Prior to installation, check the trim height against dividing or supporting shelves. If required, score and cut the trim to the appropriate height to prevent interference.

Note: Microwave ovens has a different trim width. Ensure the correct trim is used for each appliance.

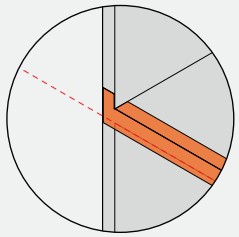

DETAIL 4
ISOMETRIC VIEW

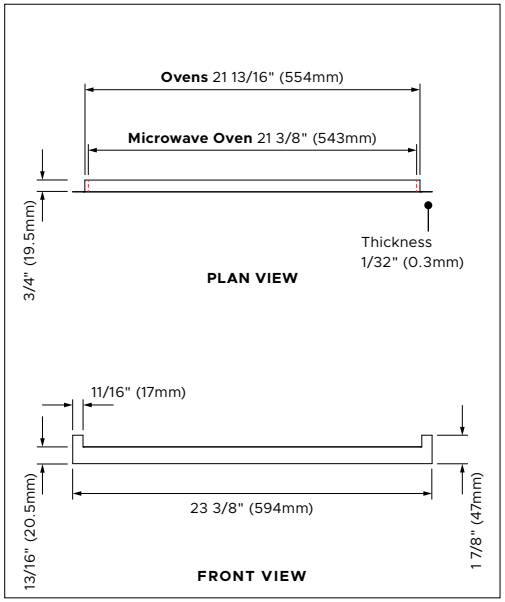

The models shown in this Planning Guide may not be available in all markets and are subject to change at any time. Product specifications may vary from those shown. This Planning Guide should not be used as installation guidance for any product. Further information is required to safely and correctly install the products featured here. Specific installation guidance will be available with the product on delivery and on our website fisherpaykel.com

© FISHER & PAYKEL APPLIANCES LIMITED 2026

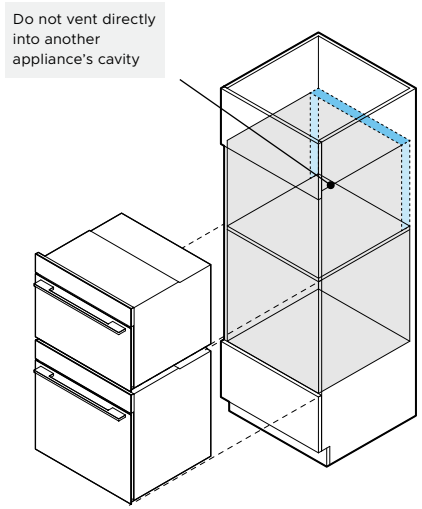

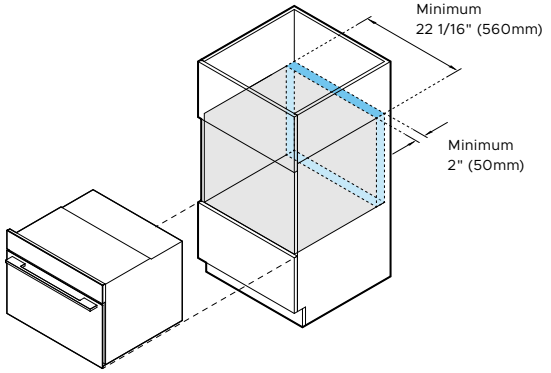

Options for total minimum ventilation area

VENTILATION

Ventilation is required to ensure proper performance of certain products.

Possible Venting Locations:

- Space behind the cabinet
- Upper cavity (not a product cavity)
- Toe kick cavity
- Adjacent cabinetry (not a product cavity)

Cabinet with back panel or installed against a wall:
Select one of the venting locations listed above, providing the required minimum ventilation area.

Cabinet without back panel:
If the cabinet is manufactured without a back panel and is not positioned directly against a wall, the open back will provide sufficient ventilation.

Do not vent directly into another appliance's cavity.

COMPACT CONVECTION-SPEED OVEN

OM24NMTB5

VENTILATION PLACEMENT

Total minimum ventilation area	43.4in (280cm²) or 2" x 22 1/16" (50mm x 560mm)
Cavity venting options	base, sides, top or back

The models shown in this Planning Guide may not be available in all markets and are subject to change at any time. Product specifications may vary from those shown. This Planning Guide should not be used as installation guidance for any product. Further information is required to safely and correctly install the products featured here. Specific installation guidance will be available with the product on delivery and on our website fisherpaykel.com

STACK HEIGHT

Stack height is overall product height with minimum clearance above appliance control panel or front panel.

A Overall product height

+

B Minimum top clearance above appliance front/custom panel to upper appliance

=

C Stack Height

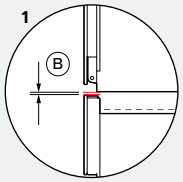

DETAIL 1
PROFILE VIEW

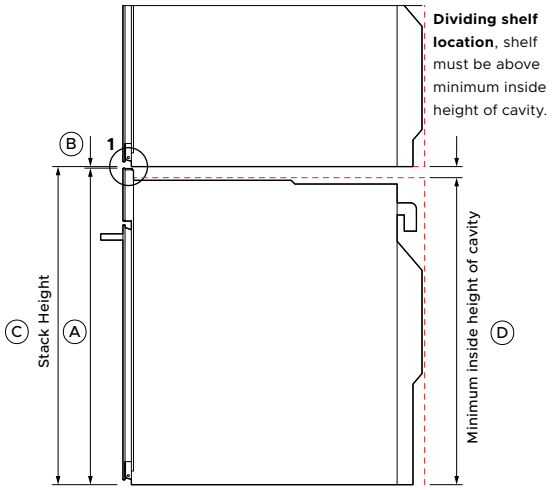

Dividing shelf location, shelf must be above minimum inside height of cavity.

PROFILE VIEW

Ventilation air vent is required at rear of cabinetry for some products.

Dividing shelves are required to support stacked appliances and to achieve correct clearance.

Dividing shelves must be constructed from material that will support the weight of the appliances.
Ensure the product is not bearing any weight from cabinetry or products installed above.

Drawers can fully support a 24" Fisher & Paykel ovens. An intermediate shelf is not required.

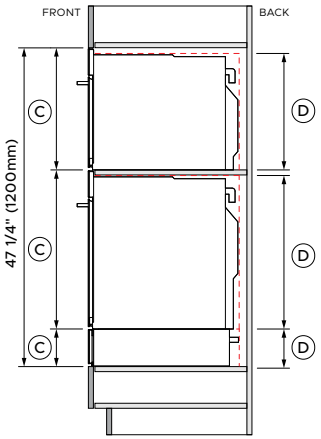

EXAMPLE
PROFILE VIEW

MINIMUM INSIDE HEIGHT OF CAVITY

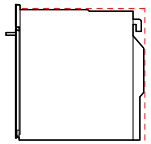

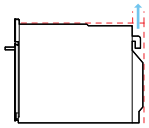



		SELF-CLEANING OVEN OB24SAMPTB5		COMPACT CONVECTION-SPEED OVEN OM24NMTB5		WARMING DRAWER WB24SMB3	
DIMENSIONS		**inch**	**mm**	**inch**	**mm**	**inch**	**mm**
A	Overall product height	23 9/16	598	18	458	5 1/2	140
B	Minimum top clearance above appliance front/custom panel	1/16	2	1/16	2	-	-
C	Stack height	23 5/8	600	18 1/8	460	5 1/2	140*
D	Minimum cavity height	22 13/16	580	17 5/16	440	5 1/2	140

*24" Fisher & Paykel ovens can be installed directly onto the drawer. An intermediate shelf is not required. Note: Standalone installation of drawers require minimum clearance above, head to 'Data Sheets' section of this Planning Guide for more details.

The models shown in this Planning Guide may not be available in all markets and are subject to change at any time. Product specifications may vary from those shown. This Planning Guide should not be used as installation guidance for any product. Further information is required to safely and correctly install the products featured here. Specific installation guidance will be available with the product on delivery and on our website fisherpaykel.com

SERVICES

© FISHER & PAYKEL APPLIANCES LIMITED 2026

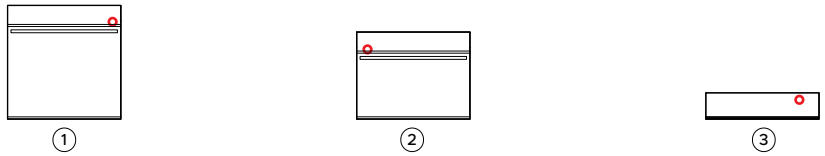

FRONT VIEW

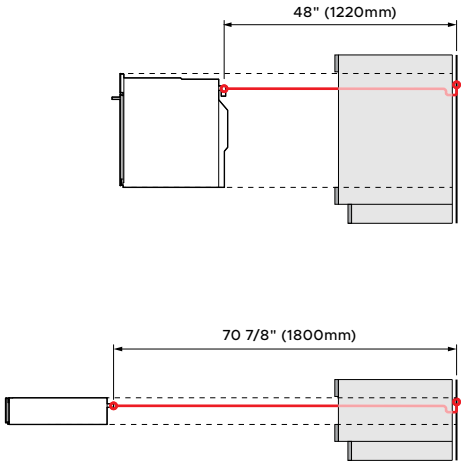

PROFILE VIEW

CONNECTION

Connections may be located in an adjacent cabinet to either side of the appliance. Ensure power will remain accessible following installation to allow access for any future product maintenance.

POWER CONNECTION WATER TANK LOCATION

HARD-WIRED

For more information on electrical requirements, refer to the Installation Guide.

		SELF-CLEANING OVEN		COMPACT CONVECTION-SPEED OVEN		WARMING DRAWERS
SERIES 9	**1**	OB24SAMPTB5	**2**	OM24NMTB5	**3**	WB24SMB3
POWER CONNECTION						
Connection		Hard-wired 48" (1220mm)		Hard-wired 70 7/8" (1800mm)		Flex cord 70 7/8" (1800mm)
Location		upper right		upper left		upper right
ELECTRICAL						
Dedicated Circuit (A)		20		20		15
Rated Power (W)		4200 / 3200		3300 / 3900		930
Supply (Hz)		60		60		60
Voltage (V)		208 / 240		208 / 240		120

Note: Multiple product installation requires the design of power outlets according to local regulations.

The models shown in this Planning Guide may not be available in all markets and are subject to change at any time. Product specifications may vary from those shown. This Planning Guide should not be used as installation guidance for any product. Further information is required to safely and correctly install the products featured here. Specific installation guidance will be available with the product on delivery and on our website fisherpaykel.com

FISHER & PAYKEL