TCM24TSN
24-INCH BUILT-IN COFFEE MACHINE NON-PLUMBED
MASTERPIECE® & PROFESSIONAL COLLECTION



FEATURES & BENEFITS

- Personalize your selection by altering ground size, temperature, cup size and aroma settings or chose from the 10 preset beverages.
- Enjoy freshly ground coffee for every cup with an exclusive Ceramic Disk Grinding System. Ceramic Disks deliver quality performance and minimize noise allowing for a smooth, consistent texture and flavor in every cup.
- Coffee customization settings store up to 8 personalized beverages with names so family members and houseguests can program their favorite drinks – from a single shot espresso, to tea, to extra-large cappuccinos.
- Cleanup has never been easier. Using both hot water and steam, the machine features a fully automatic rinse program at turn-on and turn-off, so it's always ready for the next fresh-tasting pour.

ACCESSORIES - INCLUDED

Stainless Steel Milk Container, Measuring Spoon, 1 Water Hardness Test Strip

ACCESSORIES - OPTIONAL

30" Stainless Steel Trim Kit	TCMTK30RS
Stainless Steel Milk Container	11005967
1 Lb. Bean Container	11015223
Water Filter	12008246
Descaling Tablets	00573828
Cleaning Tablets	00573829

GENERAL PROPERTIES

Modes: Ristretto, Espresso, Espresso Macchiato, Coffee, Cappuccino, Latte Macchiato, Caffè Latte, Milk Froth, Warm Milk, Hot Water, Steam Clean, Clean, Descaling

Settings: One or Two Cups, Adjustable Cup Sizes, Brewing Temperature, Coffee Strength, Grind Adjustment

Programming: Personalized Beverages, Language, Light and Display Brightness, Water Hardness, Temperature, Time, Demo Mode, Child-proof Lock, Key Sounds

Sensor Alerts: Water Level, Bean Container, Drip Tray, Coffee Grounds

Beverages Available	10
Coffee Sizes	15
Memory Beverages	8
Double Cup Option	Yes
Coffee Strength Adjustment	6 Levels
Built-in Water Filter	Yes
Automatic Cleaning	Yes
Water Container Capacity (gal.)	5/8 gallon
Bean Container	1 lb. (16 oz.)
Powder Coffee	2 Scoops
Stainless Steel Milk Container (17 oz.)	Sealable

DESIGN ELEMENTS

Display	Multilingual TFT Color Screen
Beverage Dispenser	Adjustable to Fit Tall Cups
Flush Installation	Yes

TECHNICAL DETAILS

Watts (W)	1,600 W
Circuit Breaker (A)	15 A
Current (A)	10 V
Volts (V)	120 V
Plug Type	NEMA 5-15R, 2-Pole 3-Wire Grounding
Power Cord Length (in.)	39"
Energy Source	Electric
Pump Pressure (Bar)	275 psi (19 bar)

DIMENSIONS & WEIGHT

Overall Appliance Dimensions (HxWxD) (in)	17 7/8" x 23 3/8" x 14"*
Net Weight (lbs)	43 lbs*

WARRANTY

Limited Warranty, Entire Appliance, Parts and Labor	2 Year

†To be fully ADA compliant, these units must be installed according to ADA guidelines. Please check current ADA requirements for guidance on installation.
*Not including transformer

TCM24TSN
24-INCH BUILT-IN COFFEE MACHINE NON-PLUMBED
MASTERPIECE® & PROFESSIONAL COLLECTION

COFFEE MACHINE & CUTOUT DIMENSIONS

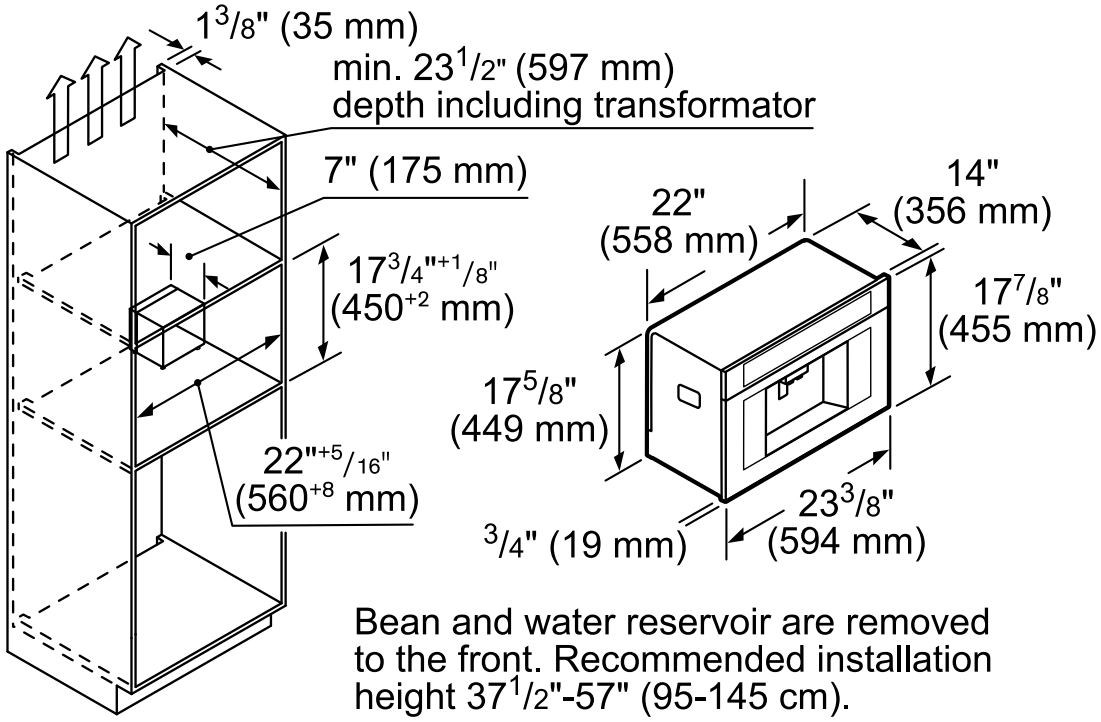

Bean and water reservoir are removed to the front. Recommended installation height 37 1/2"-57" (95-145 cm).

CUTOUT DIMENSIONS WITH OPTIONAL 30-INCH TRIM KIT TCMTK30RS

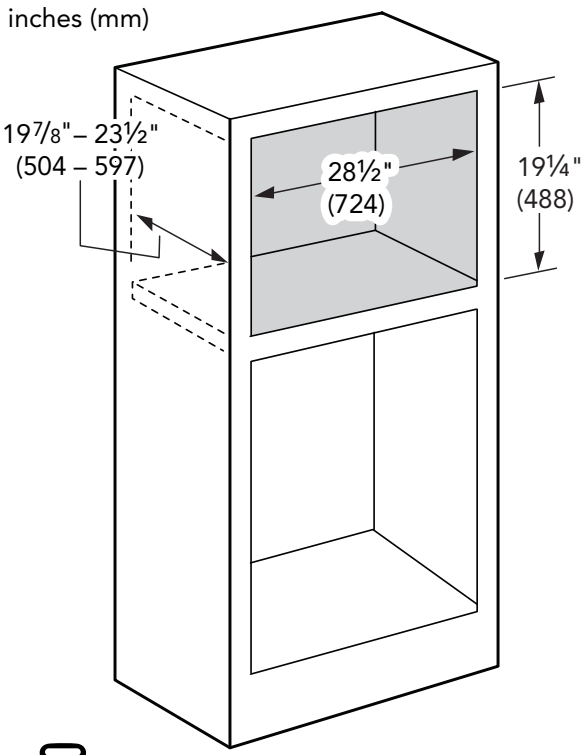

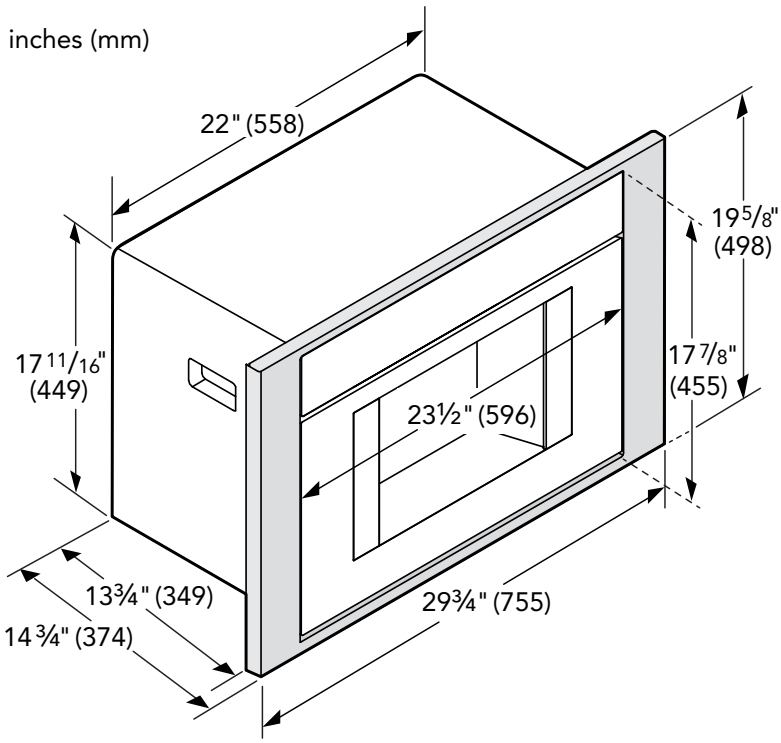

PFAS

TCM24TSN
24-INCH BUILT-IN COFFEE MACHINE NON-PLUMBED
MASTERPIECE® & PROFESSIONAL COLLECTION

inches (mm)

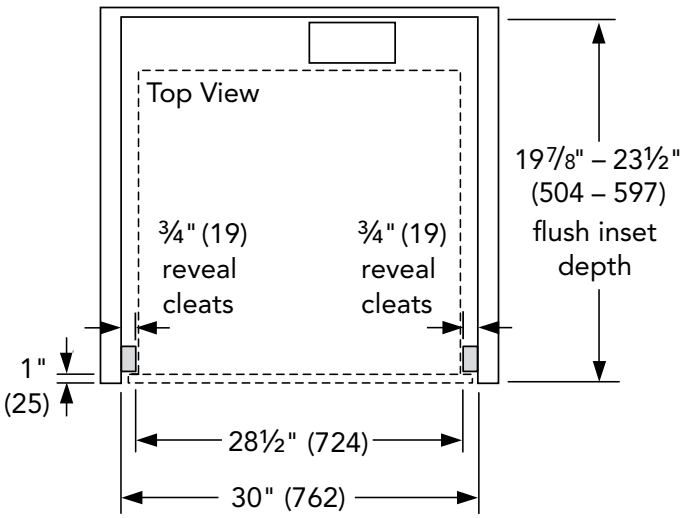

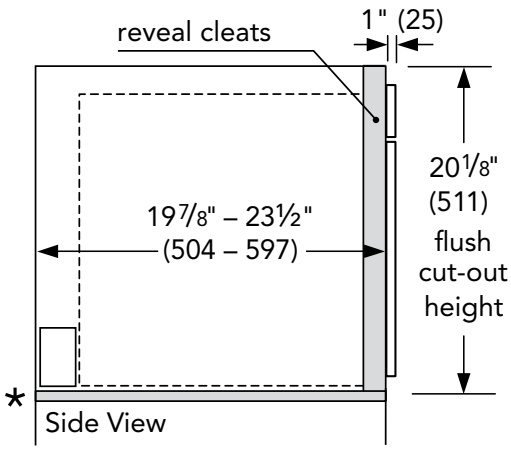

NOTE: * Flush installation requires a 5/16" (8 mm) high x 28½" (724 mm) wide x 22½" (571 mm) deep baseplate underneath the unit body.

FLUSH INSTALL

Side View

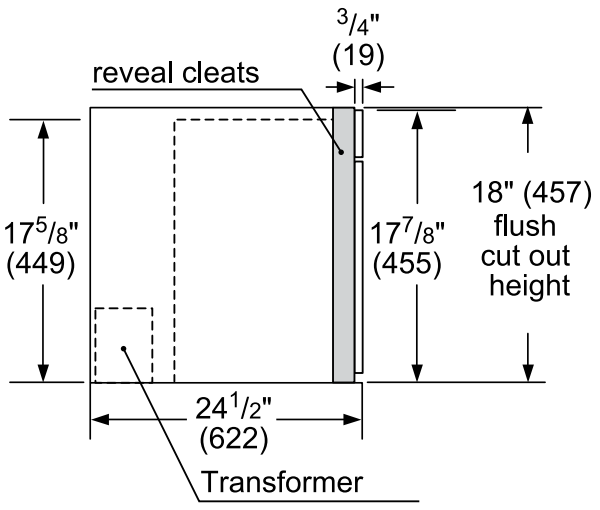

measurements in inches (mm)

Top View

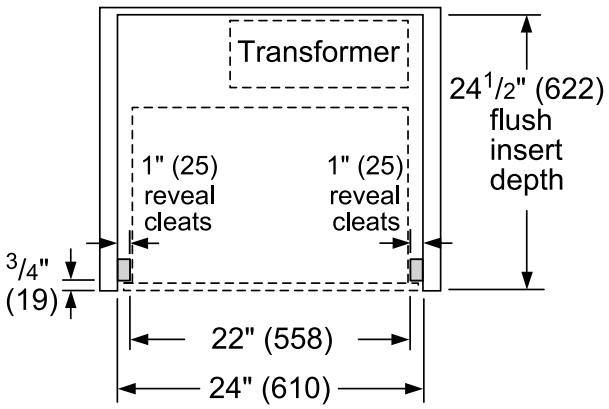

measurements in inches (mm)

These warranties give you specific legal rights and you may have other rights that vary from state to state. Limited warranty from date of delivery. For complete warranty details, refer to your Use & Care manual, or ask your dealer.

Specifications are for planning purposes only. Refer to installation instructions and consult your countertop supplier prior to making counter opening. Consult with a heating and ventilation engineer for your specific ventilation requirements. For the most detailed information, refer to installation instructions accompanying product or write to Thermador indicating the model number. Specifications are correct at time of printing. Thermador reserves the right to change product specifications or design without notice. Some models are certified for use in Canada. Thermador is not responsible for products that are transported from the U.S. for use in Canada.

1 800 735 4328 | USA THERMADOR.COM | CANADA THERMADOR.CA | ©2026 BSH HOME APPLIANCES CORPORATION. ALL RIGHTS RESERVED.