GAS CONVERSION KIT

Installation Instructions - Grill

KIT # AGCK-NG / AGCK-LP

KIT # AECK-NG / AECK-LP



EN

⚠WARNING

This conversion kit shall be installed by a qualified service agency in accordance with the manufacturer's instructions and all applicable codes and requirements of the authority having jurisdiction. If the information in these instructions is not followed exactly, a fire, explosion or production of carbon monoxide may result causing property damage, personal injury or loss of life. The qualified service agency is responsible for the proper installation of this kit. The installation is not proper and complete until the operation of the converted appliance is checked as specified in the manufacturer's instructions supplied with this kit.

IMPORTANT - READ ALL INSTRUCTIONS BEFORE YOU BEGIN

THE INSTRUCTIONS HEREIN SHOULD BE PERFORMED BY A QUALIFIED SERVICE TECHNICIAN. THE GRILL MUST BE COMPLETELY COOL AND THE PREVIOUS GAS SOURCE MUST BE SHUT OFF OR REMOVED BEFORE ATTEMPTING GAS CONVERSION. SHUT OFF OR REMOVE GAS SUPPLY TO THE APPLIANCE PRIOR TO DISCONNECTING THE ELECTRICAL POWER.

Some parts inside your grill have sharp edges. Care must be taken when handling the various components to avoid personal injury. Wear gloves when handling.

KIT CONTENTS:
Orifices (hood type for main burners)
Orifice (spud type for rotisserie)
Regulator (see pg. 5)
Instructions
Label

TOOLS REQUIRED:
Work gloves
Safety glasses
Phillips and flat-blade screwdriver
Pipe wrench or large slip-joint pliers
Thread sealant
1/2" deep socket wrench with short extension
Assorted combination wrenches (5/16, 1/2, 5/8, 3/4, 7/8 inch)

⚠ DANGER

If you smell gas:

1. Shut off gas to the appliance.
2. Extinguish any open flame.
3. Open lid.
4. If odor continues, keep away from the appliance and immediately call your gas supplier or your fire department.

⚠ DANGER

1. Do not store or use gasoline or other flammable liquids or vapors in the vicinity of this or any other appliance.
2. An LP cylinder not connected for use shall not be stored in the vicinity of this or any other appliance.

⚠WARNING IF THE INFORMATION IN THIS MANUAL IS NOT FOLLOWED EXACTLY, A FIRE OR EXPLOSION MAY RESULT CAUSING PROPERTY DAMAGE, PERSONAL INJURY, OR DEATH.

⚠WARNING Flammable Gas - disconnect all propane or natural gas supplies to this unit before servicing.

⚠WARNING Electrical Parts & Components – disconnect all power supplies and batteries before servicing.

READ THIS MANUAL CAREFULLY AND COMPLETELY BEFORE USING YOUR GRILL TO REDUCE THE RISK OF FIRE, BURN HAZARD, OR OTHER INJURY. KEEP THIS MANUAL FOR FUTURE REFERENCE.

©2019 Hestan Commercial Corporation

CHANGING ORIFICES

EN

1. Open your grill and remove the grates, radiant trays, and burners from the firebox area. Open flame burners (Trellis burners in Hestan Grills, and U-Burners in Aspire Grills) are removed by lifting up the rear of the burner, and carefully twisting to clear the igniter shroud. Sear burners have a small metal cover over the igniter which must be removed first. There is also a screw at the rear firebox wall which must be removed. The sear burner can then be carefully removed using the same twisting action to avoid breaking the ceramic igniter. Remove the rear cover of the grill. If your grill is mounted on a cart, remove the rear access panel of the cart as well. Also remove the control knobs and drip pan.

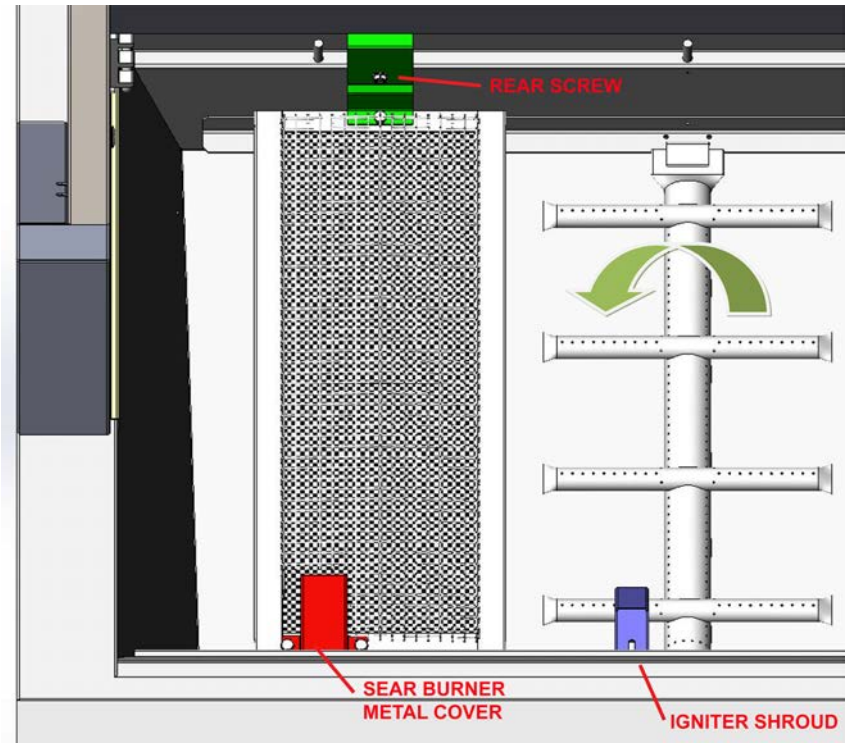

2. Beginning with the Infrared Rotisserie Burner in the upper canopy area of the grill, access the spud orifice shown in the image below. Disconnect the flex hose first. Then use a wrench to hold the brass elbow steady, while using another wrench to remove the lock-nut. You may now remove the elbow out of the burner bracket. Try not to disturb the flex hose connection by unduly bending it too much. Be careful not to damage the wires and copper thermocouple tube nearby.

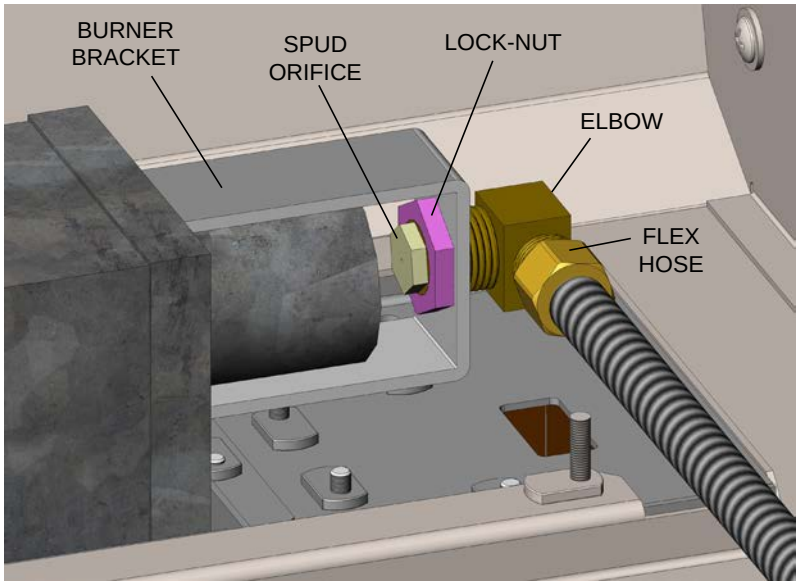

©2019 Hestan Commercial Corporation

CHANGING ORIFICES *(continued)*

3. When replacing the elbow and orifice assembly back into the burner bracket, it is important to maintain the original spacing shown below for proper burner performance. The orifice size is stamped on the orifice.

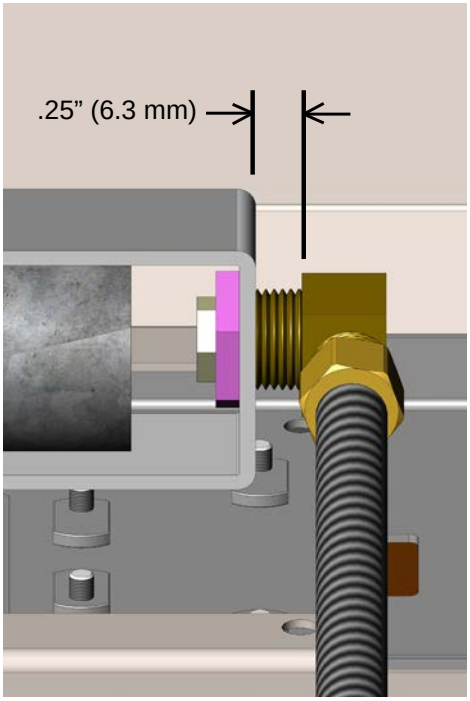

4. Remove the screws securing the control panel to the front of the grill. Carefully tilt down the control panel being careful not to damage the wires to the switches and LED light bar. Pull off the connectors to the 2 switches and the LED light bar at this time. Remove the control panel from the grill and set aside.

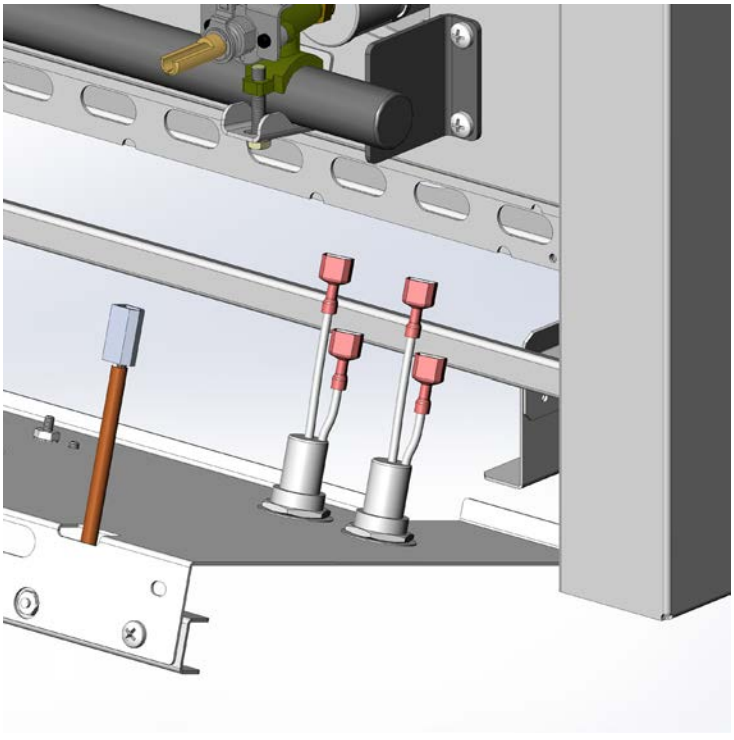

©2019 Hestan Commercial Corporation

CHANGING ORIFICES *(continued)*

5. Before removing the main burner orifices, take a visual note as to how far the orifice is installed onto the valve body. The orifices are removed with a 1/2" deep socket wrench. Use even pressure to break loose the old orifice and remove from the valve.

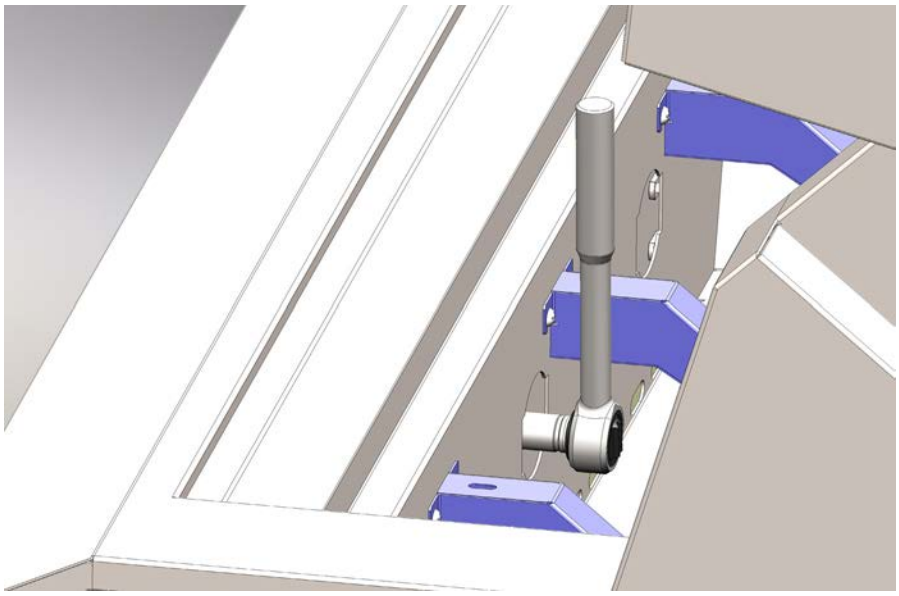

6. If your grill is equipped with both open-flame and Sear Burners, verify you have the correct orifice for each kind of burner. The orifice size is stamped on the body of the orifice. Consult the chart at the end of this manual for what size is used on each burner type. This is also a good time to clean and inspect the burners for clogged ports, debris, spider webs, etc.

   Install the orifices slowly to avoid cross-threading and damaging the threads. The orifice will become noticeably harder to turn as you proceed. Make frequent visual checks of the orifice as it goes onto the valve. As shown below, the orifice is nearly bottomed-out on the valve body. You want to tighten all the orifices equally so they are all seated the same distance. Use a burner to check the orifice is properly seated. As shown, the burner should fully seat with the orifice protruding into the air shutter as far as possible. The burner should rest flat on the burner hanger at the back of the firebox.

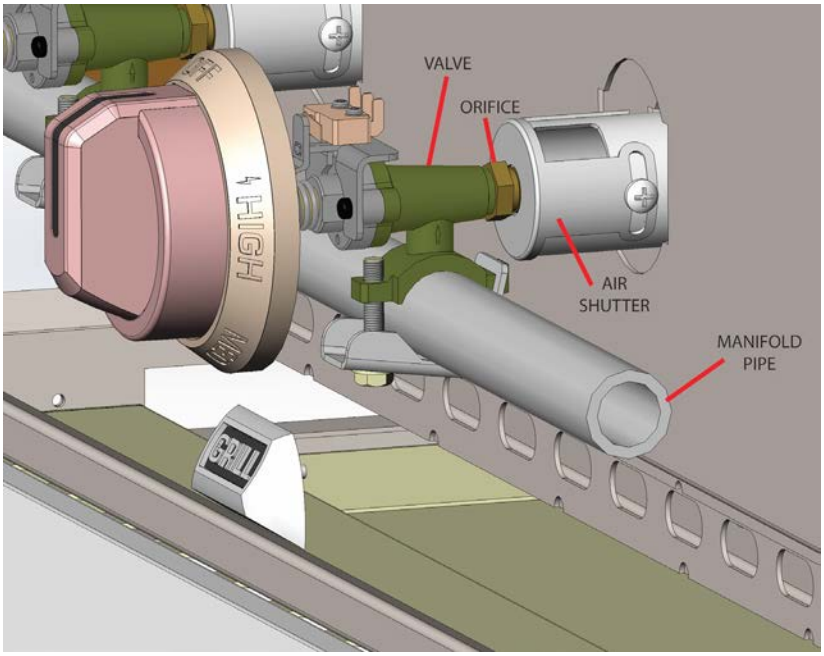

©2019 Hestan Commercial Corporation

CHANGING REGULATORS

GAS SUPPLY

The local gas authority or supplier should be consulted at the installation planning stage in order to establish the availability of an adequate supply of gas (NG or LP). If it is a new installation, have the gas authorities or supplier check the meter size and piping to assure that the unit is supplied with the necessary amount of gas supply and pressure to operate the unit(s).

Gas connections should be made by a qualified plumber, or your professional outdoor appliance service technician.

All fixed (non-mobile) appliances must be fitted with an accessible upstream gas shutoff valve as a means of isolating the appliance for emergency shut off and for servicing.

Make certain new piping and connections have been made in a clean manner and have been purged so that piping compound, chips, etc. will not clog regulators, valves, orifices, or burners. Use pipe joint compound / thread sealant approved for natural and LP gases.

REGULATOR TYPES

Shown below are the two types of regulators used on Hestan outdoor appliances. Your conversion kit (AGCK-NG or AGCK-LP) comes with the appropriate regulator for the fuel type you are converting to.

Remove your existing regulator by using a pipe wrench and other tools as required. Consult the GAS CONNECTIONS section of your Hestan outdoor appliance for full instructions on installing the new regulator, and providing accessible upstream gas shutoff valve (NG only). Use thread sealant on all connections.

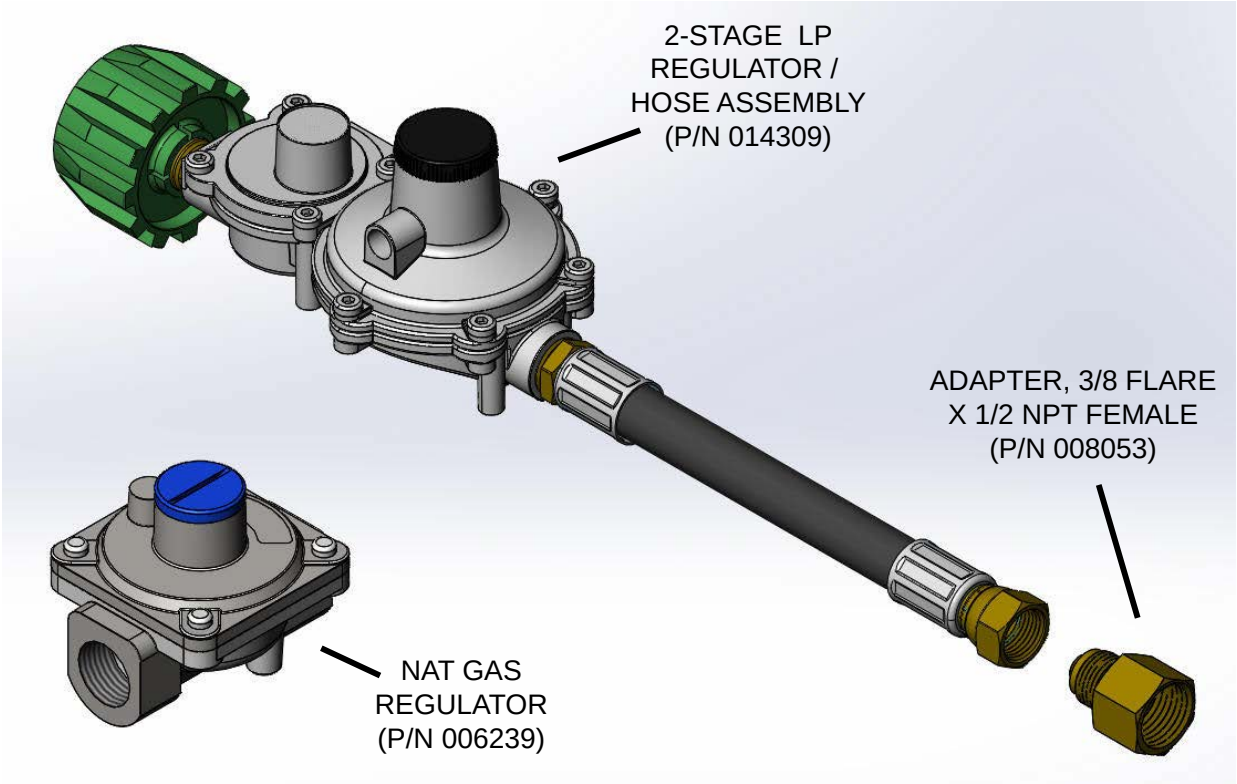

©2019 Hestan Commercial Corporation

TESTING & ADJUSTMENT

LEAK TESTING

GENERAL

A complete gas tightness check must be performed of all gas-carrying components due to possible movement during installation, or excessive pressure unknowingly being applied to parts of the unit.

BEFORE TESTING

- Do not smoke while leak testing.
- Never leak test with an open flame.
- Make a soap solution of one part liquid detergent and one part water for leak testing purposes.
- Apply the solution to the gas fittings by using a spray bottle or a brush.
- For LP units, always check with a full LP cylinder.

TO TEST

- Make sure all control valves are in the "OFF" position.
- Apply the soap solution described above to all fittings.
- Turn the gas supply on.
- Check all connections from the supply line, or LP cylinder up to and including the manifold pipe assembly.
- Soap bubbles will appear where a leak is present. If a leak is present, immediately turn off gas supply, tighten any leaking fittings, turn the gas supply back on, and recheck.
- If you cannot stop a gas leak, turn off the gas supply and call the dealer where you purchased your grill.
- Do not use the grill until all connections have been checked and do not leak.

IMPORTANT NOTE - ALWAYS CHECK FOR LEAKS AFTER EVERY LP CYLINDER CHANGE.

BURNER / VALVE ADJUSTMENTS

Consult the GAS CONNECTIONS section of your Hestan outdoor appliance for full instructions on burner adjustments, flame appearance, air shutter adjustment, and valve adjustments. This step is very important to ensure successful burner performance after conversion to the new fuel type, or changing orifices for high altitude locations.

LABEL

After conversion, the label below must be attached to the grill next to the existing rating label located under the drip pan. The qualified service technician will fill in the Gas Type, Manifold Pressure, and BTU Rates for each burner type (per the chart on previous page). The technician should sign and date the label.

GAS CONVERSION	
MODEL NUMBER	BTU/HR/ ROTISS / ROTISSOIRE
GAS TYPE / TYPE DE GAZ	BTU/HR/ GRILL / LE GRIL
MAN. PRESS. INCH W.C. / PRESS. ADM PO. W.C.	BTU/HR/ SEAR / INFRAROUGE
THIS EQUIPMENT WAS CONVERTED ON _____ (day-month-year) TO _____ GAS WITH KIT No. _____ BY THE TECHNICIAN / ORGANIZATION INDICATED BELOW, WHICH ACCEPTS RESPONSIBILITY THAT THIS CONVERSION HAS BEEN PROPERLY MADE. CET APPAREIL A ETE CONVERTI EN _____ (jour-mois-annee) À _____ GAZ AVEC KIT No. _____ PAR LE TECHNICIEN / L'ORGANISATION INDIQUÉE CI-APRÈS, QUI PRENNENT LA RESPONSABILITÉ QUE CE CONVERSION A ETE FAIT CORRECTEMENT. NAME / ADDRESS OF ORGANIZATION : NOM / ADRESSE DE L'ORGANISATION : _____ P/N 013824 REV B	

©2019 Hestan Commercial Corporation

Hestan Outdoor Orifice Chart

NG IS 7" SUPPLY --> 4" AT MANIFOLD
LP IS 11" SUPPLY --> 10" AT MANIFOLD

Equipment	Burner Type	Gas Type	Rate Per Burner (Btu/hr)	Orifice P/N	ORIFICE SIZE		Air Shutter Opening (inch)
					-NG	-LP	
30" Outdoor Grill	Trellis Burner	NG	25,000	000293-042	42	-	5/16
	Sear Burner	NG	25,000	000293-042	42	-	N/A
	Rotiss	NG	12,000	002865-051	51	-	N/A
	Trellis Burner	LP	25,000	000293-053	-	53	3/8
	Sear Burner	LP	22,000	000293-054	-	54	N/A
	Rotiss	LP	11,000	002865-060	-	60	N/A
36" Outdoor Grill	Trellis Burner	NG	25,000	000293-042	42	-	5/16
	Sear Burner	NG	25,000	000293-042	42	-	N/A
	Rotiss	NG	14,000	002865-050	50	-	N/A
	Trellis Burner	LP	25,000	000293-053	-	53	3/8
	Sear Burner	LP	22,000	000293-054	-	54	N/A
	Rotiss	LP	13,000	002865-057	-	57	N/A
42" Outdoor Grill	Trellis Burner	NG	25,000	000293-042	42	-	5/16
	Sear Burner	NG	25,000	000293-042	42	-	N/A
	Rotiss	NG	18,000	002865-045	45	-	N/A
	Trellis Burner	LP	25,000	000293-053	-	53	3/8
	Sear Burner	LP	22,000	000293-054	-	54	N/A
	Rotiss	LP	18,000	002865-056	-	56	N/A

Aspire Outdoor Orifice Chart

NG IS 7" SUPPLY --> 4" AT MANIFOLD
LP IS 11" SUPPLY --> 10" AT MANIFOLD

Equipment	Burner Type	Gas Type	Rate Per Burner (Btu/hr)	Orifice P/N	ORIFICE SIZE		Air Shutter Opening (inch)
					-NG	-LP	
30" Aspire Grill	U-Burner	NG	23,000	000293-043	43	-	1/4
	Sear Burner	NG	23,000	000293-043	43	-	N/A
	Rotiss	NG	12,000	002865-051	51	-	N/A
	U-Burner	LP	23,000	000293-054	-	54	3/8
	Sear Burner	LP	23,000	000293-054	-	54	N/A
	Rotiss	LP	11,000	002865-060	-	60	N/A
36" Aspire Grill	U-Burner	NG	23,000	000293-043	43	-	1/4
	Sear Burner	NG	23,000	000293-043	43	-	N/A
	Rotiss	NG	14,000	002865-050	50	-	N/A
	U-Burner	LP	23,000	000293-054	-	54	3/8
	Sear Burner	LP	23,000	000293-054	-	54	N/A
	Rotiss	LP	13,000	002865-057	-	57	N/A
42" Aspire Grill	U-Burner	NG	23,000	000293-043	43	-	1/4
	Sear Burner	NG	23,000	000293-043	43	-	N/A
	Rotiss	NG	18,000	002865-045	45	-	N/A
	U-Burner	LP	23,000	000293-054	-	54	3/8
	Sear Burner	LP	23,000	000293-054	-	54	N/A
	Rotiss	LP	18,000	002865-056	-	56	N/A

©2019 Hestan Commercial Corporation

RETAIN THIS MANUAL FOR FUTURE REFERENCE

Hestan Commercial Corporation

3375 E. La Palma Ave.
Anaheim, CA 92806
(888) 905-7463

©2019 Hestan Commercial Corporation P/N 008979 REV E