HIGH ALTITUDE KIT
OUTDOOR GRILL
GABR / GSBR / GMBR
EAB / EABR / EMB / EMBR
Installation Instructions

EN

IMPORTANT - READ ALL INSTRUCTIONS BEFORE YOU BEGIN

THE INSTRUCTIONS HEREIN SHOULD BE PERFORMED BY A QUALIFIED SERVICE TECHNICIAN. THE GRILL MUST BE COMPLETELY COOL AND THE PREVIOUS GAS SOURCE MUST BE SHUT OFF OR REMOVED BEFORE ATTEMPTING GAS CONVERSION.

Some parts inside your grill have sharp edges. Care must be taken when handling the various components to avoid personal injury. Wear gloves when handling.

TOOLS REQUIRED:

- Work gloves
- Safety glasses
- Phillips screwdriver
- Flat-blade screwdriver
- Pipe wrench or large slip-joint pliers
- Thread sealant
- 1/2" deep socket wrench with short extension
- Assorted combination wrenches (5/16, 1/2, 5/8, 3/4, 7/8 inch)

DANGER	**DANGER**
If you smell gas: 1. Shut off gas to the appliance. 2. Extinguish any open flame. 3. Open lid. 4. If odor continues, keep away from the appliance and immediately call your gas supplier or your fire department.	1. Do not store or use gasoline or other flammable liquids or vapors in the vicinity of this or any other appliance. 2. An LP cylinder not connected for use shall not be stored in the vicinity of this or any other appliance.

WARNING IF THE INFORMATION IN THIS MANUAL IS NOT FOLLOWED EXACTLY, A FIRE OR EXPLOSION MAY RESULT CAUSING PROPERTY DAMAGE, PERSONAL INJURY, OR DEATH.

WARNING Flammable Gas - disconnect all propane or natural gas supplies to this unit before servicing.

WARNING Electrical Parts & Components – disconnect all power supplies and batteries before servicing.

READ THIS MANUAL CAREFULLY AND COMPLETELY BEFORE USING YOUR GRILL TO REDUCE THE RISK OF FIRE, BURN HAZARD, OR OTHER INJURY. KEEP THIS MANUAL FOR FUTURE REFERENCE.

©2017 Hestan Commercial Corporation

CHANGING ORIFICES

EN

1. Open your grill and remove the grates, radiant trays, and burners from the firebox area. Trellis and U-burners are removed by lifting up the rear of the burner, and carefully twisting to clear the igniter shroud. Infrared Sear Burners have a small metal cover over the igniter which must be removed first. There is also a screw at the rear firebox wall which must be removed. The sear burner can then be carefully removed using the same twisting action to avoid breaking the ceramic igniter. Remove the outside rear cover of the grill. If your grill is mounted on a cart, remove the rear access panel of the cart as well. Also remove the control knobs and drip pan.

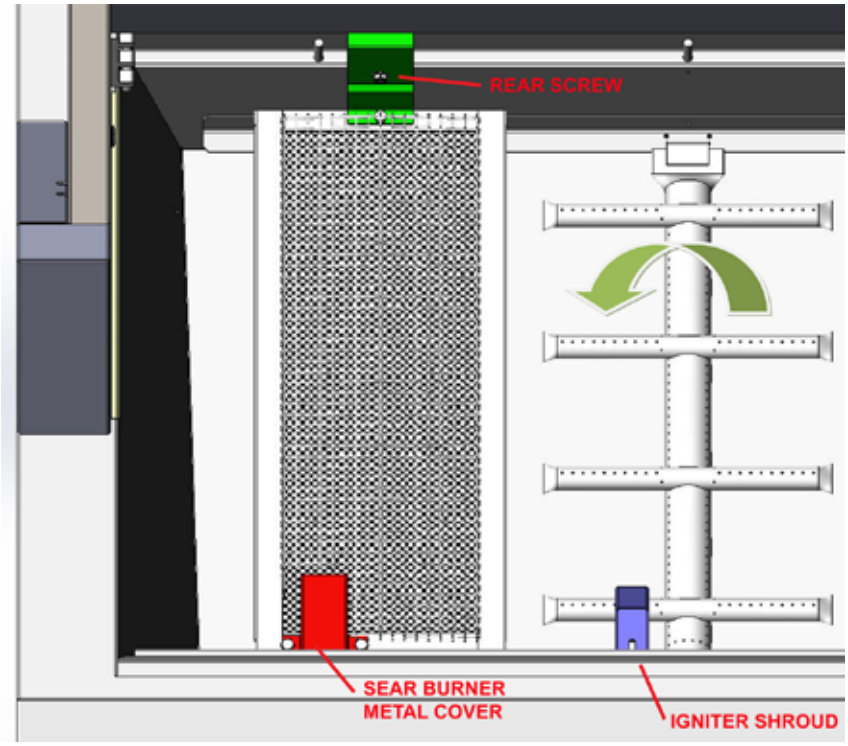

2. Beginning with the Infrared Burner in the upper canopy area of the grill, access the spud orifice shown in the image below. Disconnect the flex hose first. Then use a wrench to hold the brass elbow steady, while using another wrench to remove the lock-nut. You may now remove the elbow out of the burner bracket. Try not to disturb the flex hose connection by unduly bending it too much. Be careful not to damage the wires and copper thermocouple tube nearby.

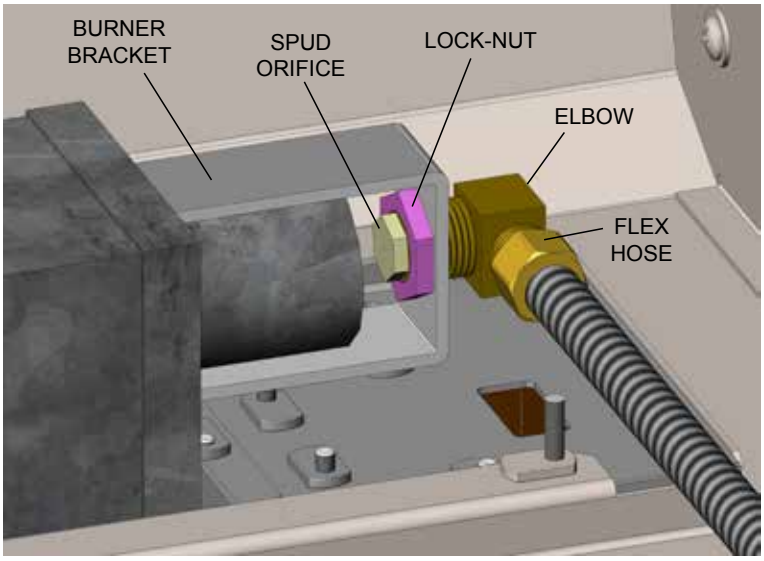

©2017 Hestan Commercial Corporation

3. When replacing the elbow and orifice assembly back into the burner bracket, it is important to maintain the original spacing shown below for proper burner performance.

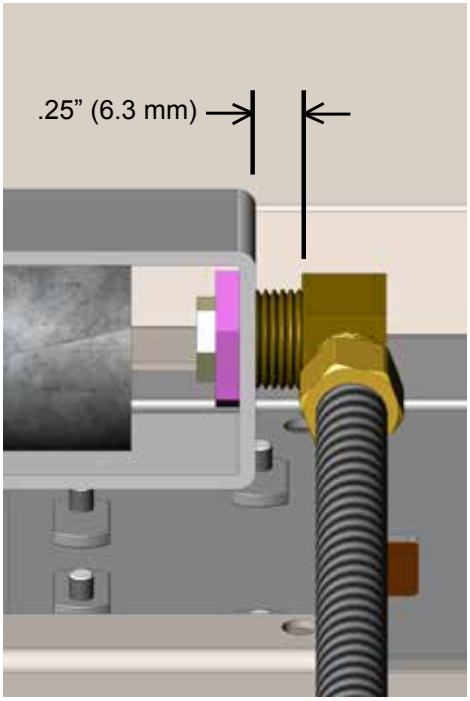

4. Remove the screws securing the control panel to the front of the grill. Carefully tilt down the control panel being careful not to damage the wires to the switches and LED light bar. Pull off the connectors to the 2 switches and the LED light bar at this time. Remove the control panel from the grill and set aside.

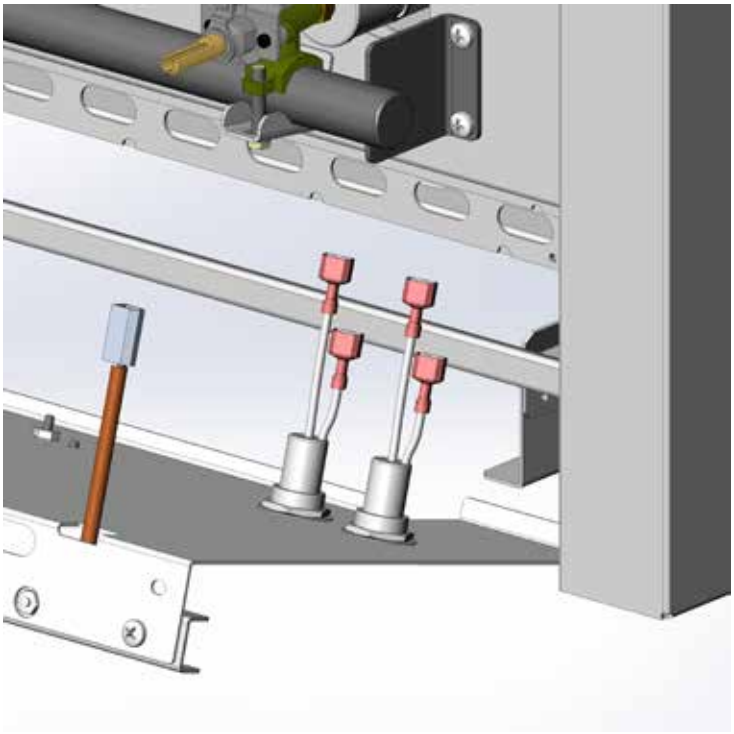

©2017 Hestan Commercial Corporation

CHANGING ORIFICES *(continued)*

5. Before removing the main burner orifices, take a visual note as to how far the orifice is installed onto the valve body. The orifices are removed with a 1/2" deep socket wrench. Use even pressure to break loose the old orifice and remove from the valve.

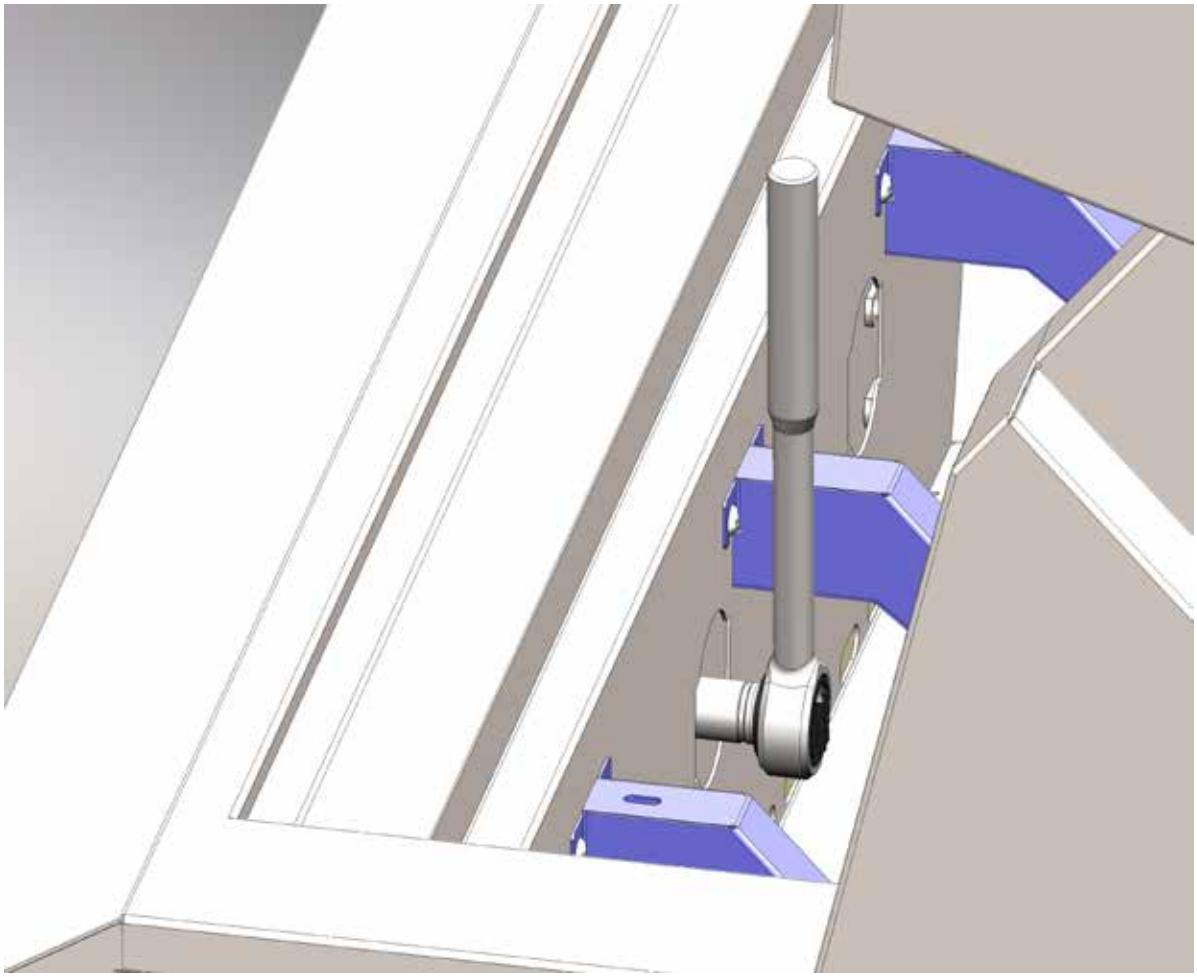

©2017 Hestan Commercial Corporation

6. If your grill is equipped with both open-flame (Trellis or U-burners) and Infrared Sear Burners, verify you have the correct orifice for each kind of burner. The orifice size is stamped on the body of the orifice. Consult the chart at the end of this manual for what size is used on each burner type for your altitude. This is also a good time to clean and inspect the burners for clogged ports, debris, spider webs, etc.

   Install the orifices slowly by hand to avoid cross-threading and damaging the threads. The orifice will become noticeably harder to turn as you proceed. Make frequent visual checks of the orifice as it goes onto the valve. As shown below, the orifice is nearly bottomed-out on the valve body. You want to tighten all the orifices equally so they are all seated the same distance. Use a burner to check the orifice is properly seated. As shown, the burner should fully seat with the orifice protruding into the air shutter as far as possible. The burner should rest flat on the burner hanger at the back of the firebox.

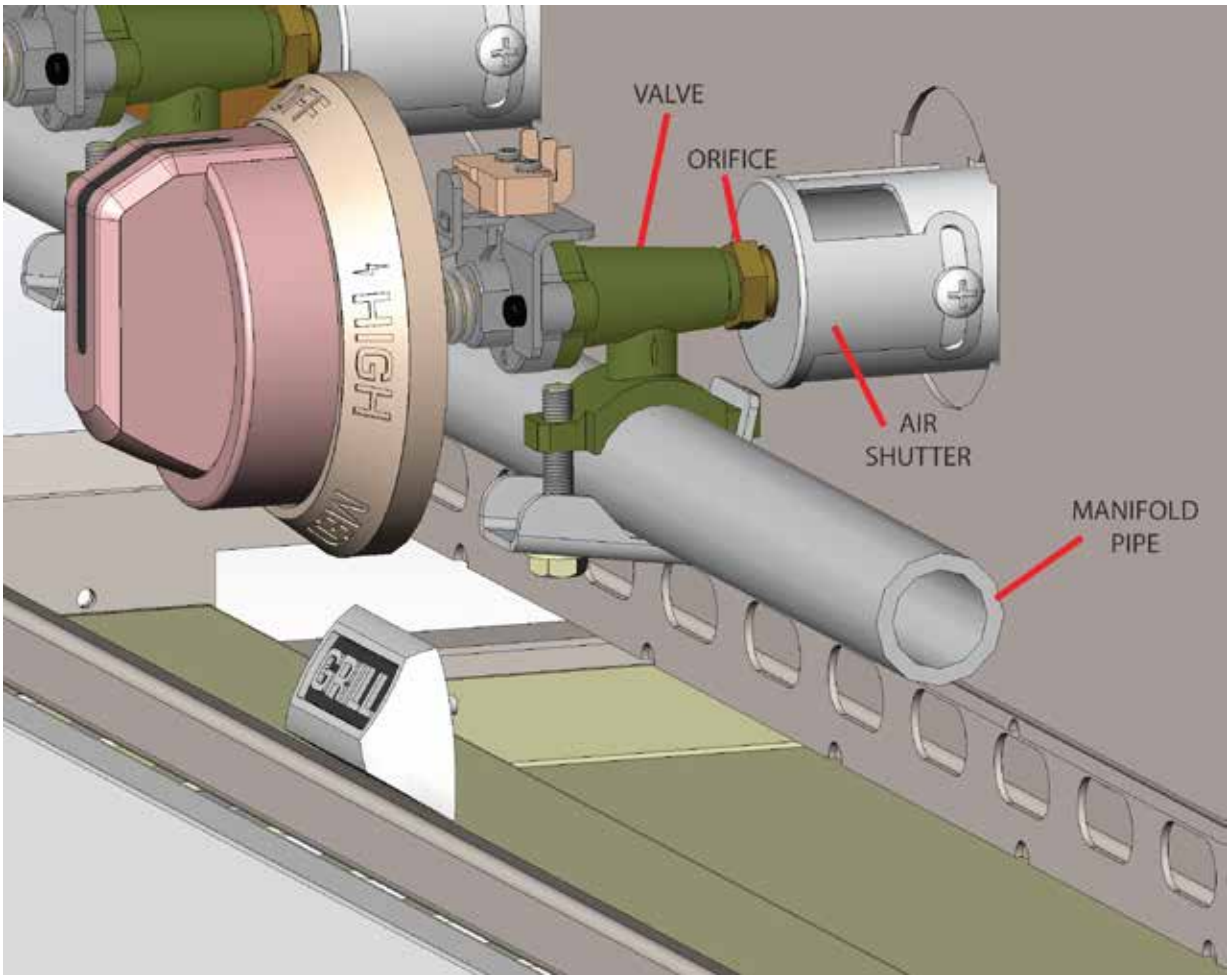

©2017 Hestan Commercial Corporation

TESTING & ADJUSTMENT

LEAK TESTING

GENERAL

A complete gas tightness check must be performed of all gas-carrying components due to possible movement during installation, or excessive pressure unknowingly being applied to parts of the unit.

BEFORE TESTING

- Do not smoke while leak testing.
- Never leak test with an open flame.
- Make a soap solution of one part liquid detergent and one part water for leak testing purposes.
- Apply the solution to the gas fittings by using a spray bottle or a brush.
- For LP units, always check with a full LP cylinder.

TO TEST

- Make sure all control valves are in the “OFF” position.
- Apply the soap solution liberally to all fittings.
- Turn the gas supply on.
- Check all connections from the supply line, or LP cylinder up to and including the manifold pipe assembly.
- Soap bubbles will appear where a leak is present. If a leak is present, immediately turn off gas supply, tighten any leaking fittings, turn the gas supply back on, and recheck.
- If you cannot stop a gas leak, turn off the gas supply and call the dealer where you purchased your grill.
- Do not use the grill until all connections have been checked and do not leak.

IMPORTANT NOTE - ALWAYS CHECK FOR LEAKS AFTER EVERY LP CYLINDER CHANGE.

©2017 Hestan Commercial Corporation

BURNER / VALVE ADJUSTMENTS

Consult the GAS CONNECTIONS section of your Hestan or Aspire outdoor appliance for full instructions on burner adjustments, flame appearance, air shutter adjustment, and valve adjustments. This step is very important to ensure successful burner performance after conversion to a new fuel type, or changing orifices for high altitude locations.

Hestan Grill Orifice Chart

Equipment	Burner Type	Gas Type	Rate Per Burner (Btu/hr)	ORIFICE SIZE			Air Shutter Opening (inch)
				Sea Level - 1999 ft (609m)	2000 ft (609m) - 5999 ft (1829m)	6000 ft (1829m) - 10000 ft (3048m)	
30" Hestan Grill	Trellis Burner	NG	25,000	**42**	**43**	**45**	5/16
		LP	25,000	53	54	55	3/8
	Sear Burner	NG	25,000	**42**	**43**	**45**	N/A
		LP	22,000	54	55	56	N/A
	Rotiss	NG	12,000	**51**	**52**	**53**	N/A
		LP	11,000	60	62	64	N/A
36" Hestan Grill	Trellis Burner	NG	25,000	**42**	**43**	**45**	5/16
		LP	25,000	53	54	55	3/8
	Sear Burner	NG	25,000	**42**	**43**	**45**	N/A
		LP	22,000	54	55	56	N/A
	Rotiss	NG	14,000	**50**	**51**	**52**	N/A
		LP	13,000	57	59	62	N/A
42" Hestan Grill	Trellis Burner	NG	25,000	**42**	**43**	**45**	5/16
		LP	25,000	53	54	55	3/8
	Sear Burner	NG	25,000	**42**	**43**	**45**	N/A
		LP	22,000	54	55	56	N/A
	Rotiss	NG	18,000	**45**	**47**	**49**	N/A
		LP	18,000	56	57	59	N/A

Aspire Grill Orifice Chart

Equipment	Burner Type	Gas Type	Rate Per Burner (Btu/hr)	ORIFICE SIZE			Air Shutter Opening (inch)
				Sea Level - 1999 ft (609m)	2000 ft (609m) - 5999 ft (1829m)	6000 ft (1829m) - 10000 ft (3048m)	
30" Aspire Grill	U-Burner	NG	23,000	**43**	**44**	**47**	1/4
		LP	23,000	54	55	56	3/8
	Sear Burner	NG	23,000	**43**	**44**	**47**	N/A
		LP	23,000	54	55	56	N/A
	Rotiss	NG	12,000	**51**	**52**	**53**	N/A
		LP	11,000	60	62	64	N/A
36" Aspire Grill	U-Burner	NG	23,000	**43**	**44**	**47**	1/4
		LP	23,000	54	55	56	3/8
	Sear Burner	NG	23,000	**43**	**44**	**47**	N/A
		LP	23,000	54	55	56	N/A
	Rotiss	NG	14,000	**50**	**51**	**52**	N/A
		LP	13,000	57	59	62	N/A
42" Aspire Grill	U-Burner	NG	23,000	**43**	**44**	**47**	1/4
		LP	23,000	54	55	56	3/8
	Sear Burner	NG	23,000	**43**	**44**	**47**	N/A
		LP	23,000	54	55	56	N/A
	Rotiss	NG	18,000	**45**	**47**	**49**	N/A
		LP	18,000	56	57	59	N/A

©2017 Hestan Commercial Corporation

RETAIN THIS MANUAL FOR FUTURE REFERENCE



Hestan Commercial Corporation

3375 E. La Palma Ave
Anaheim, CA 92806
(888) 905-7463

©2017 Hestan Commercial Corporation P/N 013465 REV B