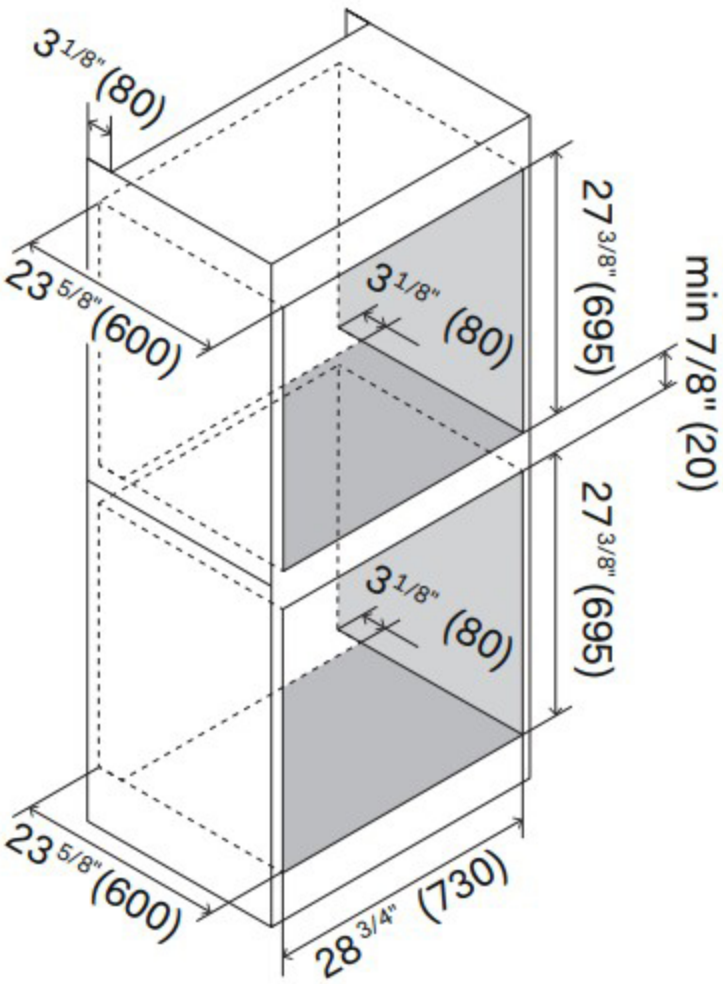
3 1/8" (80)
23 5/8" (600)
27 3/8" (695)
3 1/8" (80)
min 7/8" (20)
27 3/8" (695)
3 1/8" (80)
23 5/8" (600)
28 3/4" (730)

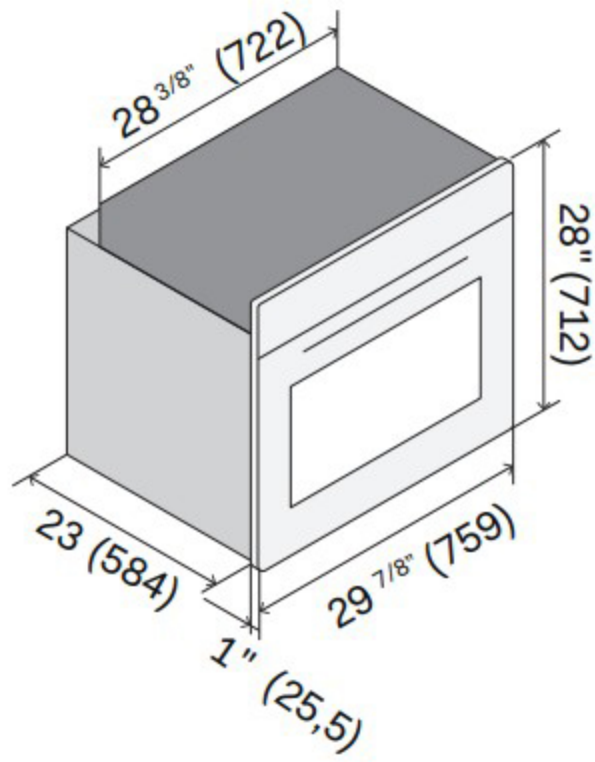
28 3/8" (722)
28" (712)
23 (584)
29 7/8" (759)
1" (25,5)

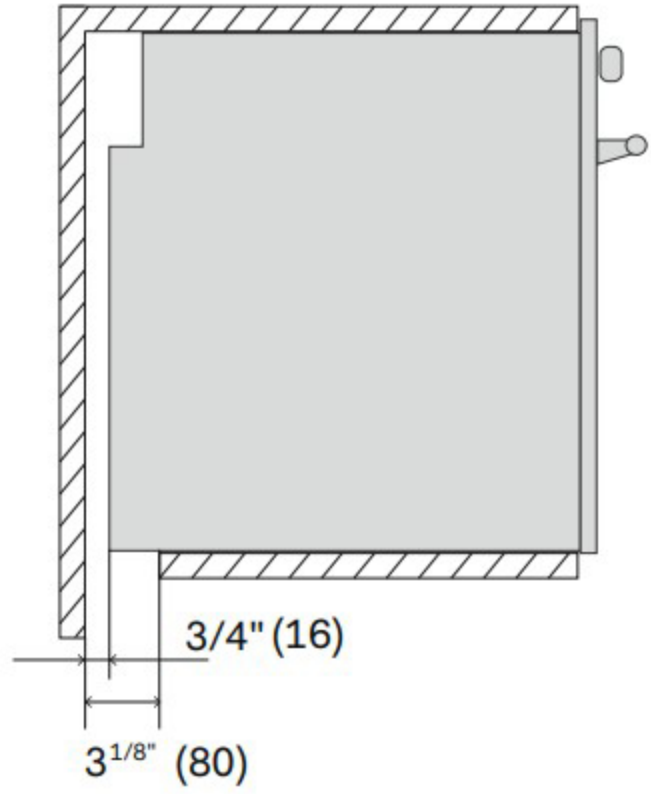
3/4" (16)
3 1/8" (80)