BUILT-IN OVEN PY

UOV30...PY

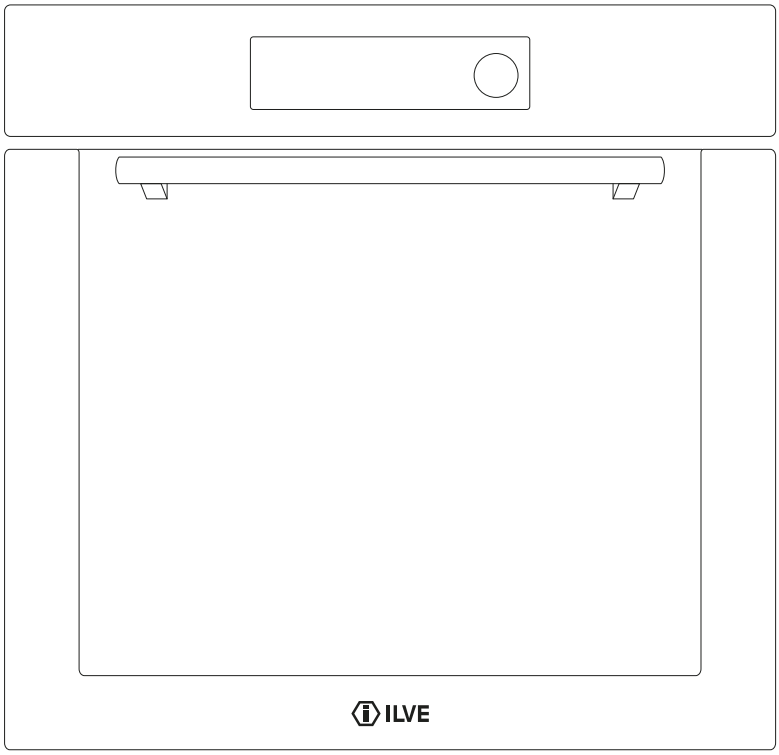

EN | User's manual

ILVE

IMPORTANT - PLEASE READ AND FOLLOW

- Before beginning, please read these instructions completely and carefully.
- Do not remove permanently affixed labels, warnings, or plates from the product. This may void the warranty.
- Please observe all local and national codes and ordinances.
- Please ensure that this product is properly grounded.
- The installer should leave these instructions with the consumer who should retain them for local inspector's use and for future reference.

WARNING If the informations in this instructions is not followed exactly, a fire or explosion may result causing property damage, personal injury or death.

⚠ WARNING

- NEVER use this appliance as a space heater to heat or warm the room.
- Keep appliance area clear and free from combustible materials, gasoline and other flammable vapors and liquids.
- If the enclosed hardware cannot be utilized, please refer to a qualified installer to properly fasten the appliance so that it does not tip over.
- Failure to do so can result in death or serious burns to children or adults.
- Installation must conform with local codes. Electrical installation must be in accordance with the National Electrical Code, ANSI/NFPA70 latest edition and/or local codes.
- Electrical installation must be in accordance with the current CSA C22.1 Canadian Electrical Codes Part 1 and/or local codes.
- The manufacture reserves the right to make changes to its products when considered necessary and useful, without affecting the essential safety and operating characteristics.
- This appliance has been designed for non-professional, domestic use only.
- This appliance must be used only for the purposes for which it was intended. Any other use is incorrect and therefore dangerous.
- Possible hazards may result from using this appliance for storage space.
- Appliances are not intended for manufactured (mobile) home installation .
- Misuse of appliance doors such as stepping, leaning or sitting on them can result in damage or personal hazards or injuries.
- DO NOT TOUCH HEATING ELEMENTS OR INTERIOR SURFACES OF OVEN – Heating elements may be hot even though they are dark in color. Interior surfaces of an oven become hot enough to cause burns. During and after use, do not touch, or let clothing or other flammable materials contact heating elements or interior surfaces of oven until they have had sufficient time to cool.
- Other surfaces of the appliance may become hot enough to cause burns – these surfaces include oven vent openings and surfaces near these openings, oven doors and oven door windows, the control panel, the cooking chamber surface, and accessories such as racks and the drip tray.
- Care must be taken to prevent aluminum foil and meat probes from contacting the heater elements.

⚠ WARNING

DO NOT ATTEMPT TO EXIT AN OIL / GREASE FIRE WITH WATER.

IMPORTANT INSTRUCTION

CAUTION: Do Not Leave Children Alone - Children should not be left alone or unattended in area where appliance is in use. They should never be allowed to sit or stand on any part of the appliance. Do not store items of interest to children above or at the back of this appliance, as they could climb on the appliance to reach items and be injured.

Wear Proper Apparel - Loose-fitting or hanging garments should never be worn while using the appliance.

User Servicing - Do not repair or replace any part of the appliance unless specifically recommended in the manual.

All other servicing should be referred to a qualified technician.

Storage in or on Appliance – Flammable materials should not be stored in an oven or near surface units.

Do Not Use Water on Grease Fires - Smother fire or flame or use dry chemical or foam type extinguisher .

Do Not Clean Door Gasket – The door gasket is essential for a good seal. Care should be taken not to rub, damage, or move the gasket.

Do not use a protective coating to line the oven and do not use commercial oven cleaner unless Certified for use in a self-cleaning oven.

Clean Only Parts Listed in Manual.

Before Self-Cleaning the Oven – Remove broiler pan and other utensils

Use Only Dry Potholders - Moist or damp potholders on hot surfaces may result in burns from steam. Do not let potholder touch hot heating elements. Do not use a towel or other bulky cloth.

Never leave this appliance unattended when in use. Boilovers and greasy spills may smoke or ignite Do not heat unopened food containers, such as baby food jars and cans. Pressure build-up may cause the container to burst and cause injury. Before performing service, shut off electricy to this appliance.

- Wear proper apparel. Loose-fitting or hanging garments should never be worn while using this appliance.
- Use extreme caution when moving a grease kettle or disposing of hot grease.
- Clean only those parts listed in this guide.
- Do not repair or replace any part of this appliance unless specifically recommended in literature accompanying this appliance.
- Do not obstruct the flow of air to ensure proper combustion and ventilation.
- Proper Installation – Be sure your appliance is properly installed and grounded by a qualified technician.
- Never Use Your Appliance for Warming or Heating the Room.

1. Use Care When Opening Door - Let hot air or steam escape before removing or replacing food.
2. Keep Oven Vent Ducts Unobstructed.
3. Placement Of Oven Racks - Always place oven racks in desired location while oven is cool. If rack must be moved while oven is hot, do not let potholder contact hot heating element in oven.

⚠ CALIFORNIA PROPOSITION 65

WARNING: This product can expose you to chemicals including lead and cadmium, which are known to the State of California to cause cancer and birth defects or other reproductive harm. For more information, visit: www.P65Warnings.ca.gov.

- This appliance must be installed only by an authorized person. The installation must be carried out in accordance with the manufacturer's instructions.
- IMPORTANT: This appliance must be installed in compliance with the applicable standards in the country concerned.
- The installation of this appliance must comply with local codes and regulations. In the absence of local codes, installation must comply with U.S. standards: American National Standards – National Fuel Gas Code ANSI Z223.1 – NFPA 54.
- If local codes permit, it is recommended that this appliance be connected to the gas supply with a certified AGA or CGA flexible metal connector, with a maximum length of 5 feet (1.5 m) and an inside diameter of ½". Do not kink or damage the flexible connector when moving the appliance. The pressure regulator has a ½" female threaded connection. You will need to determine the proper fitting according to the diameter of your gas supply line, the flexible connector, and the shutoff valve.
- Once installed, the appliance must be grounded in accordance with local codes, or, in the absence of local codes, in accordance with the National Electrical Code ANSI/NFPA 70 and Canadian Standard CSA C22.1-02.

WARNING

Before removing the appliance, disconnect the power supply cord and close the corresponding gas shutoff valve. Make sure that the power supply cord is not damaged during cleaning or maintenance operations.

NOTE 1: Hazards may occur in case of abnormal use, including excessive load on the oven door.

NOTE 2: Reinstall the appliance according to the manufacturer's instructions to avoid any risk of tipping.

Product Model/Serial Label and Rating Label Locations

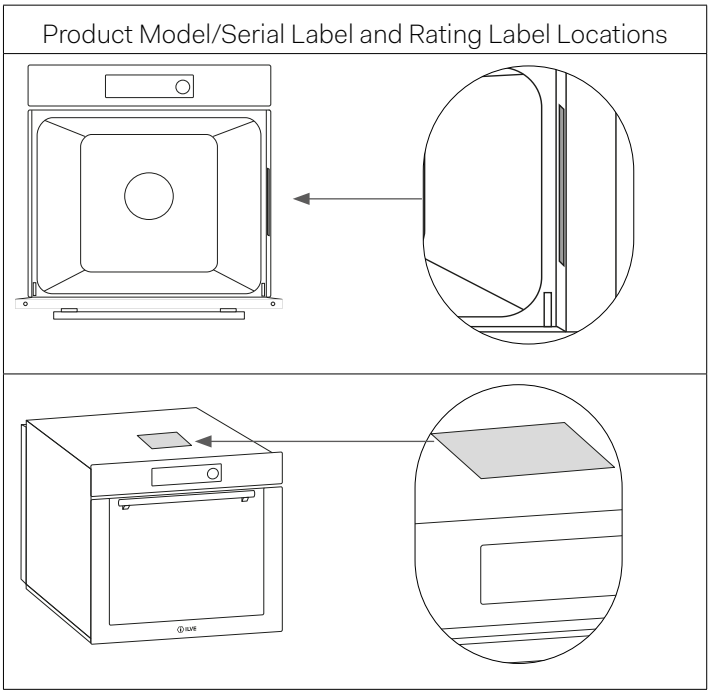

INSTALLATION INSTRUCTIONS

IMPORTANT – SAVE FOR THE LOCAL ELECTRICAL INSPECTOR'S USE

APPLIANCE INSTALLATION

Unpacking the oven

To avoid risk of severe personal injury and damage to the unit and flooring; this appliance requires two or more personnel while handling and moving. Possible use of appliance dollies moving devices is recommended

- Remove all packing materials from the shipping pallet but leave the adhesive-backed foam layer over brushed-metal surfaces to protect it from scratches until the range is installed in its final position.
- Examine the appliance after unpacking it. In the event of transport damage, do not plug it in. Take pictures of the damage and report it immediately to the freight forwarder.
- If the power supply cable is damaged, it must be replaced by the manufacturer, its service agent or similarly qualified person in order to avoid a safety hazard.
- Remove the oven door. This will reduce the weight of the appliance.
- The oven racks should be removed to facilitate handling.
- Before moving the appliance, protect the floor to prevent damage.
- Use an appliance dolly to move the oven near the opening. Place the appliance dolly on the side to prevent damage, do not use on front or rear.
- Use the supplied brackets to attach to the cabinet
- Place the oven in the opening and slide into position. To ensure adequate depth for proper installation, the conduit must fit into the recessed area along the rear edge of the oven.
- Lift the oven by the handle installed on the side panel.
- Shield the edge of the cabinet with a tape before insert the oven.
- Check that the oven is correctly aligned with the units.
- Locate the mounting hole in each side trim, and install screws, ensuring that the oven remains centered.
- Cover the screws with the caps.
- Remove and recycle packing materials including the white protective material behind each rack guide mounting location.

The misuse of the oven door (placing heavy objects on the oven doo, hanging off the handle, stepping or hiting on the door) can result in damage to the product and /or injuries.

DO NOT install two or more wall ovens single or

double side-by-side or stacked on top of the other.

The characteristics label, which can be found on the door frame or on the oven lid and is shown on page 1, is visible when the door is open. It contains all the necessary installation information, such as: appliance model, nominal voltage, and power consumption. First, measure and check the niche for the oven installation in the cabinet, ensuring that it exactly matches the dimensions shown in figure A. Make sure that the cabinet's finish, veneer, or other materials are glued with heat-resistant adhesive (300°F). If the finish or adhesive is not heat-resistant, the material may warp or peel, especially at the narrowest points of the cabinet. Ensure that the cabinet intended for the oven installation has a solid base and can support the weight of the appliance. All screws and accessories required for securing the oven to the cabinet are included. The following figures will be helpful for the proper installation and correct placement in the cabinet.

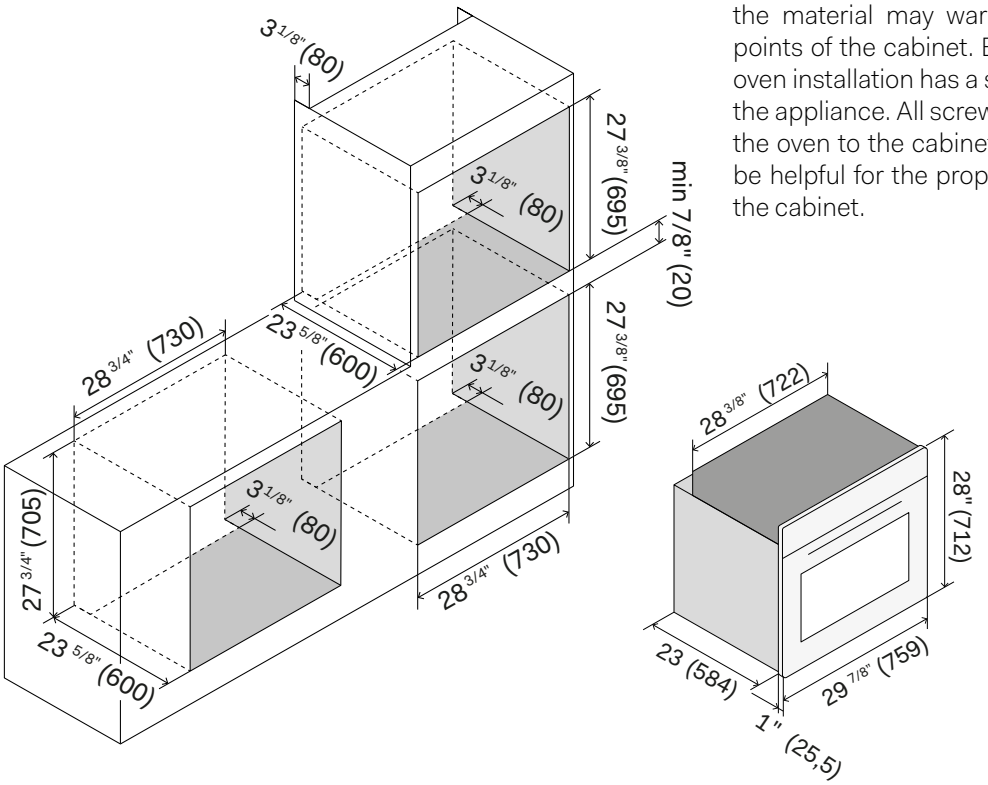

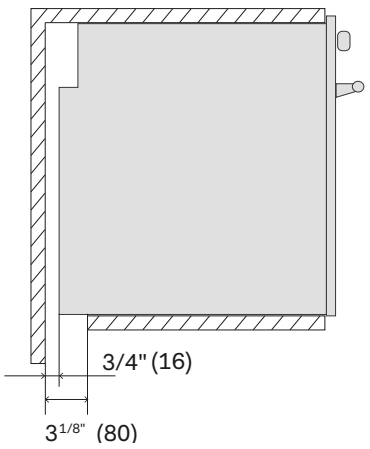

INSTALLATION INSTRUCTIONS

Installation underneath a built-in hob

The oven can be installed in a standard or flush application. Finish the edges of the opening because they may be visible when the door is open. The clearance between the oven and the kitchen units or other installed appliances must be enough to ensure sufficient ventilation and air discharge (minimun clearance 1"). If installed under a hob, space must be left between the bottom of the hob and the top of the oven to allow for ventilation of the entire compartment. Any ventilation openings required for the hob are
to be added to those required by the oven.

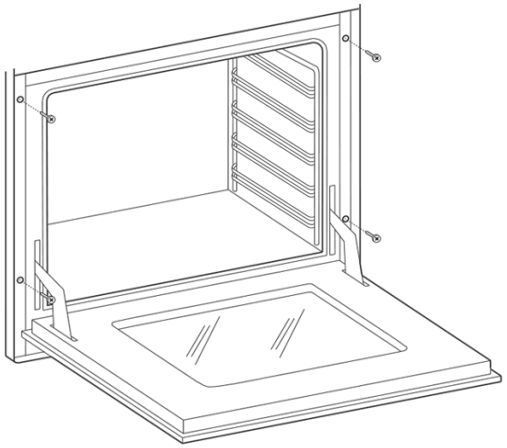

Oven dimension

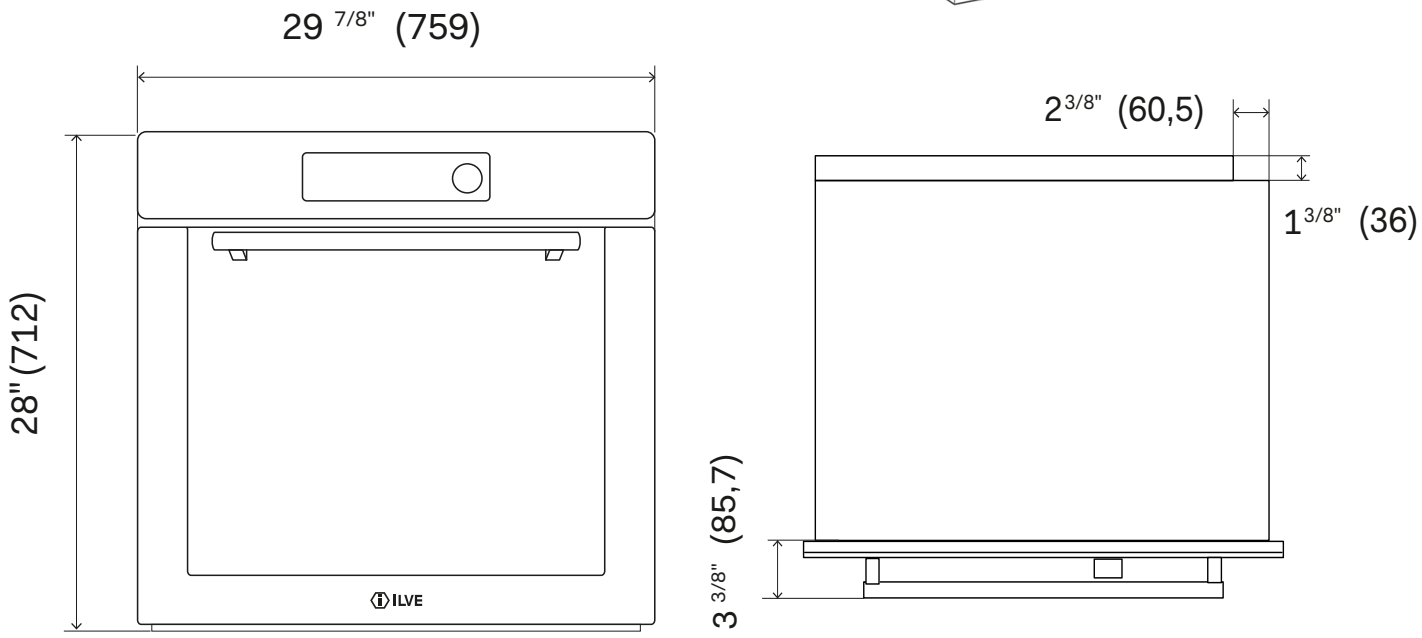

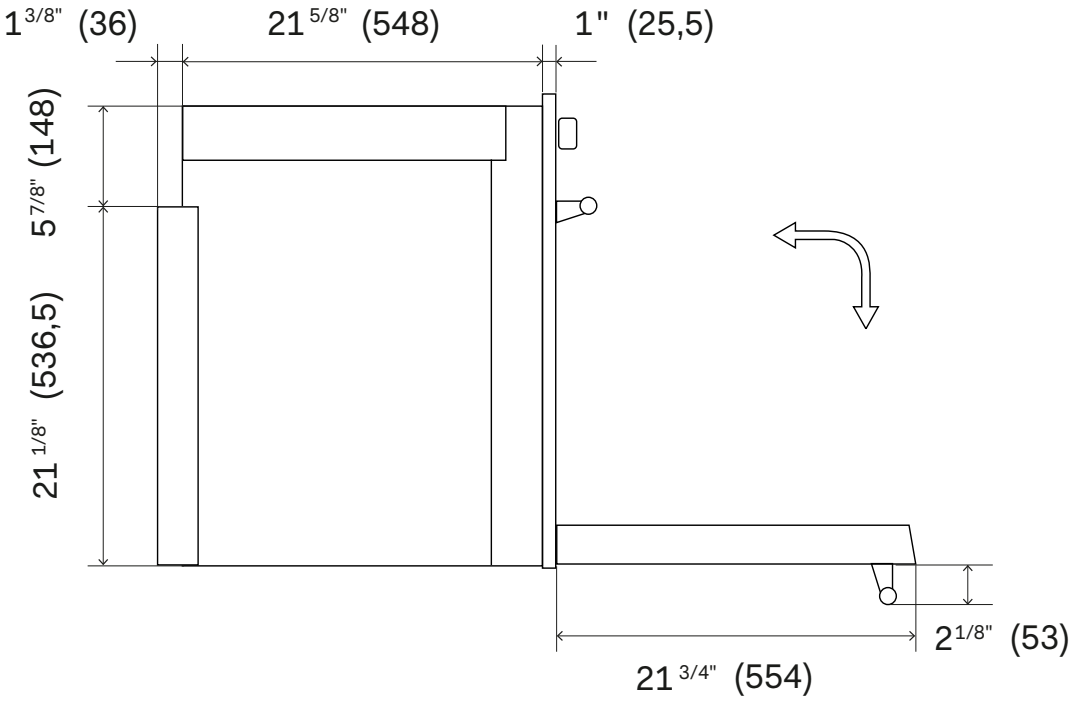

ELECTRICAL CONNECTION

The appliance must be connected to a single-phase electrical line of 120/240 V~ 60 Hz or 120/208 V~ 60 Hz.

The following images show the procedure for switching from 120/240 V to 120/208 V.

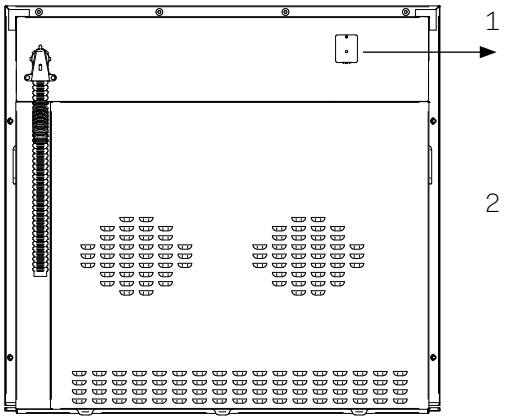

1



2



WITH OUT BRIDGE 240V

3



WITH BRIDGE 208V

The appliance is factory-equipped with a flexible conduit.

Inside the flexible conduit there are four wires:

the green wire must be connected to ground,

the white wire (NEUTRAL),

the red and black wires: power supply wires (F – F1).

Please refer to the wiring diagram available at the end of our instruction manual.

The power consumption values for each model are indicated in the attached electrical power rating table.

Before connecting the appliance to the electric network, follow the instructions below:

1. fuse and electric supply installation of your home must bear the load of the appliance (see registration label).
2. the power supply system must have an efficient earth connection.
3. the outlet or multiple-switch, with a minimum1/8" (3mm) contact opening, has to be easily reached once the appliance has been installed.

⚠ WARNING

If the voltage is wrong, the oven can be damaged.

⚠ CAUTION

Risk of Electric Shock. If the cord or plug becomes damaged, disconnect the appliance from the power supply and replace only with a cord or plug of the same type

Check your local code for which of the options below should be used in grounding the receptacle power supply connections.

FOUR-WIRE CONNECTION:

- Connect the L1 receptacle terminal to the incoming BLACK electrical supply wire (L1 – hot wire).
- Connect the L2 receptacle terminal to the incoming RED electrical supply wire (L2 – hot wire).
- Connect the NEUTRAL receptacle terminal to the incoming NEUTRAL (WHITE) electrical supply wire.
- Connect the GROUND receptacle terminal to the incoming GROUND (GREEN) electrical supply wire.

Four-wire connection diagram (NEMA 14-50R receptacle)

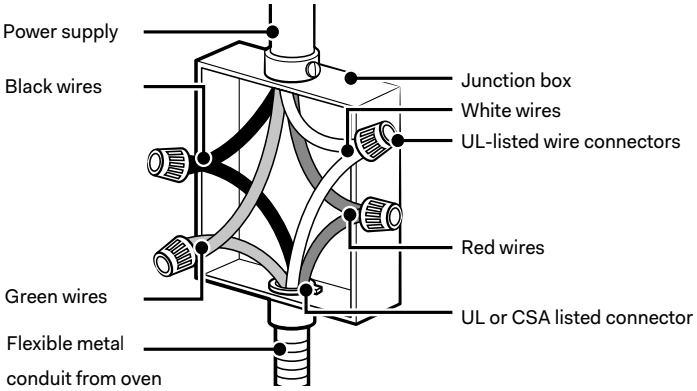

Service & maintenance instructions

Replacement Parts.

Authorized replacement parts may be used in performing service on the appliance. Replacement parts are available from factory authorized part distributors.

NON WORKING APPLIANCES

Before calling the After Sales Service, check that the appliance is connected or that the main switch is activated.

After, call the After Sales Service. The faults must be checked by an experienced technician.

Note: The appliance is equipped with a certified software safety device. If it reaches an excessively high temperature, the appliance switches off and displays an error message.

INSTRUCTIONS FOR USE
TFT touch display

Icons legend

	Pause
	Start
	°C - °F
	Screen lock
	Confirm
	Settings
	Meat probe
	Home
	Light
	Timer
	Exit - Term
	Time
	Settings confirmation
OFF	Off

	Knob to activate PYROLISIS function

Functioning

Home - Initial display page

1 = Allows you to proceed to the cavity settings screen.

2 = Allows you to set the timer.

3 = Allows you to access the settings directly.

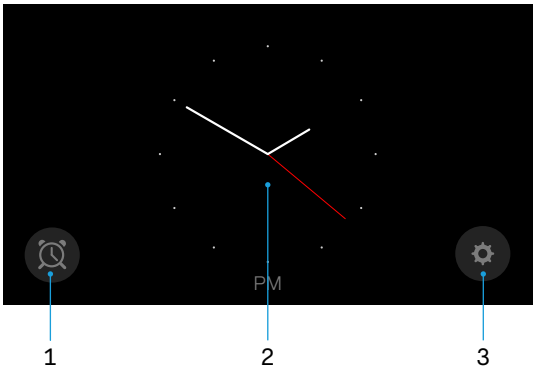

Settings

4 = Choice of temperature scale (°C or °F)

5 = Set the time

6 = Exit - End of a function

7 = Lock screen

8 = To unlock, touch the display for 10 seconds

9 = Allows you to set the volume of the sound signal and, optionally, choose a sound for touch interactions.

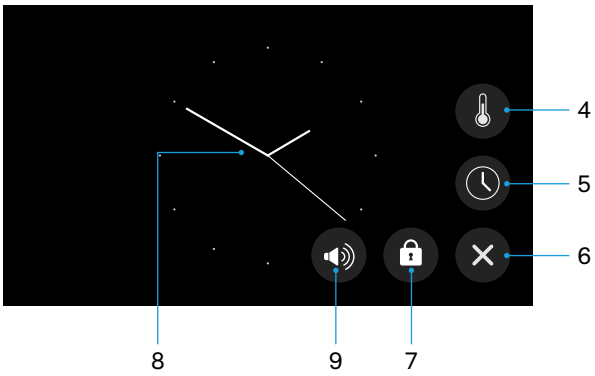

Set a Timer

10 = Increase or decrease the time

11 = Confirm once the desired time is set. A sound signal will indicate when the time is up.

12 = Confirm and return to the home page

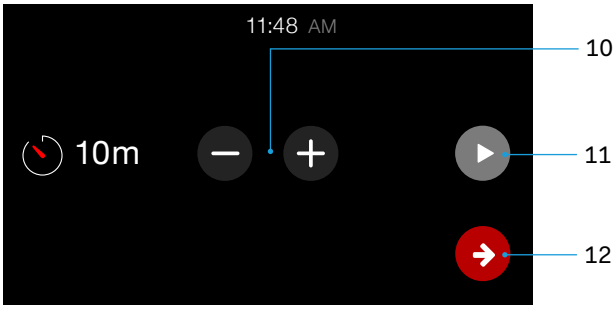

INSTRUCTIONS FOR USE

TFT touch display

Cavity set

Once the cavity is set (cooking function, temperature, and timer are set), confirm to begin preheating. At this point, the display will switch to preheating mode

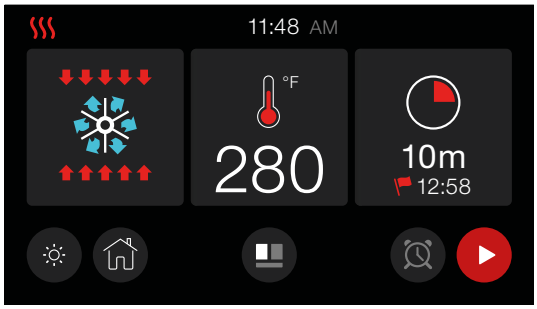

Preheating phase

There are multiple levels that allow you to monitor the preheating process. The red section will progressively increase until it fills the display. If no cooking time was set, it is possible to pause the cooking (PAUSE, by pressing the button) or stop it by pressing OFF

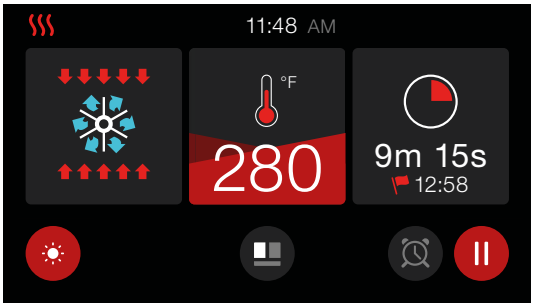

Preheating complete

When the set temperature is reached, the display will turn red to indicate the end of the preheating phase and the beginning of the cooking phase. If a cooking time was set, the oven will automatically turn off when the time expires.

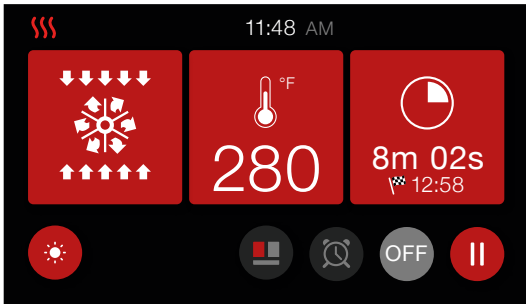

Cooking with meat probe

N.B. The meat probe function cannot be used in the "DEFROST," "QUICK START," "PIZZA," and "ECO" modes. With the oven in standby, insert the meat probe into the designated connection socket, which is primarily located on the left side wall of the oven.

Temperature probe selector

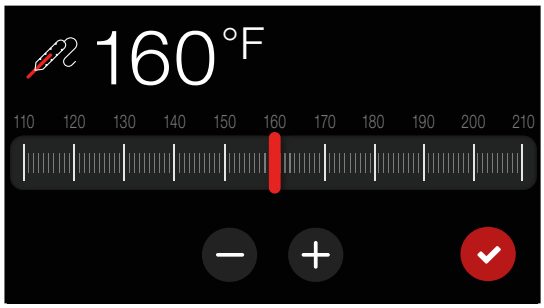

Heating mode with probe

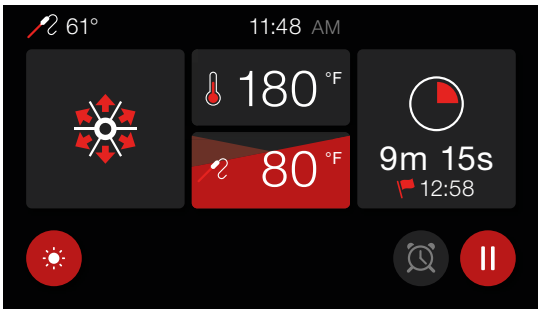

⚠

WARNING: If the display does not respond to commands (touch screen locked), simply open and close the oven door

Functions

	**1- Multi-Ventilated Cooking** This function allows the simultaneous cooking of different dishes without mixing their odors. You can cook lasagna, pizza, croissants, pastries, pies, etc.
	**2- Ventilated Grill Cooking** Particularly fast and deep with significant energy savings, this function is suitable for many foods such as pork ribs, sausages, pork or mixed skewers, game, Roman gnocchi, etc.
	**3- Intensive Cooking** This function provides rapid and intense cooking for various dishes; it is ideal for: baked fish, braised vegetables, skewers, duck, chicken, etc.
	**4- Quick Start** This function speeds up the preheating of your oven. It is recommended for use when setting a cooking temperature between 390°F and 570°F. Using Quick Start for temperatures lower than 392°F does not provide significant benefits. WARNING: The Quick Start function is not suitable for cooking food; it is only used to preheat the oven more quickly. DO NOT USE THE QUICK START FUNCTION FOR MORE THAN 20 MINUTES.
	**5- Pizza Cooking** This function is particularly suitable for cooking pizzas, focaccias, and bread. The main heat source comes from the lower heating element, which works in combination with the other oven elements.

INSTRUCTIONS FOR USE

TFT touch display



	**6- Static Conventional Cooking** This is the classic electric oven function, particularly suitable for cooking the following foods: pork ribs, sausages, salted cod, braised meat, game, veal roast, meringues and cookies, baked fruit, etc.
	**7- Grill Cooking with Closed Door** This function is suitable for fast and deep grilling, gratinating, and roasting in general, such as filet, Florentine steak, grilled fish, and even grilled vegetables.
	**8- Proofing** This function is used to rise dough. Put the dough in a greased bowl, and cover it with a damp cloth or plastic wrap coated with nonstick spray. Set the temperature between 85°F and 105°F and the timer for the recipe's rise time.
	**9- Bottom Cooking** This is the most suitable cooking method for finishing dishes, especially pastries (cookies, meringues, leavened cakes, fruit cakes, etc.) and other foods.
	**10- Dehydration** This oven is designed not only to cook, but also to dehydrate fruits, vegetables and meat. Warm air is circulated by a motorized fan in the rear of the oven and over a period of time, the water is removed from the food by evaporation. Removal of water inhibits growth of microorganisms and retards the activity of enzymes. It is important to remember that dehydration does not improve the quality, so only fresh, top-quality foods should be used. ⚠ WARNING You must carefully check the food during the dehydration process to ensure that it does not catch fire. Typical values are shown in the table: FOOD TYPE — DEHYDRATING TEMP Fruit — 100°F Vegetable — 125°F Meat — 150°F
PYR	**11- Pyrolysis, automatic oven cleaning** Selecting this function the AUTOMATIC CLEANING cycle is started. With "PYROLYSIS" a temperature of around 850°F is reached which reduces to dust any food residue. It is enough afterwards to pass a damp cloth to remove the residual ashes, without having to use any detergents. During the pyrolysis cycle, the special catalytic filter starts working and absorbs and eliminates fats and bad odours. Note: to activate the self-cleaning function the relevant knob must be used.
	**Dry / Moist Cooking** The oven is equipped with an automatic device that allows cooking vapors, in certain functions (1 -3 -6 - 9), to be expelled from the oven, resulting in dry (dry) cooking. If the cooking requires the humidity to remain inside the oven (moisture), the automatic device can be deactivated by touching the corresponding icon.
COOKING INSPECTION If it is necessary to inspect the food during cooking, you can open the oven door. In this case, the lights will turn on, and the forced ventilation will stop if you are using a ventilated cooking function. Additionally, the rotation of the spit will stop if using the grill cooking with the door closed. Closing the door will reactivate the previously set function.	

Pyrolytic Function

Cleaning Procedure

1. For optimal results, manually remove any food pieces with a damp sponge (smoke may form).
2. Remove all accessories from the cooking cavity (grids, trays, side racks, and any cookware).
3. With the door closed, select the pyrolysis function. After a few seconds, the door lock device will activate.
4. During the pyrolysis cycle, the special catalytic filter will activate to absorb and eliminate grease and odors.
5. The oven door will only open once the function is complete and the oven has cooled to a safe temperature.
6. At the end of the process, it is easy to remove any residues that may have formed, depending on the degree of dirt in the cavity, by using a damp cloth.
7. The duration of the pyrolysis cycle can be set to 90 minutes or 150 minutes, depending on the amount of dirt deposited on the oven walls. A delayed start for the cleaning cycle can also be set.

⚠ WARNING:

- Risk of Burns
  There is a risk of injury due to high temperatures on the surfaces – during the pyrolytic cleaning cycle, the oven heats up much more than during normal cooking. Avoid touching the oven.
- Health Risk
  Due to the high temperature reached, nearly 850°F, vapors are released that could irritate the mucous membranes. Therefore, it is essential to ventilate the room well during use and avoid prolonged exposure. Keep children away.
  Note: During the pyrolysis function, the oven light does not turn on.
- CAUTION: DO NOT LEAVE FOOD OR COOKING UTENSILS IN OVEN DURING THE PYROLITIC SELF-CLEANING MODE OF OPERATION

⚠ WARNING:

- IF TWO OVENS ARE INSTALLED (ONE ABOVE THE OTHER), IT IS NOT RECOMMENDED TO RUN THE PYROLYTIC CLEANING FUNCTION ON BOTH OVENS AT THE SAME TIME. THE PYROLYTIC CLEANING CYCLE SHOULD BE CARRIED OUT SEPARATELY: FIRST ON ONE OVEN AND, ONCE IT HAS COMPLETED THE CYCLE AND COOLED DOWN, ON THE OTHER OVEN.

INSTRUCTIONS FOR USE

SABBATH Function

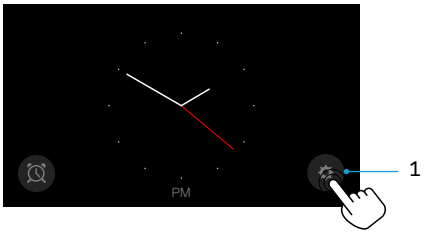

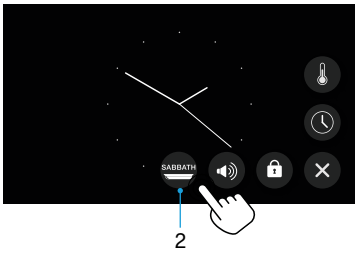

3 - 4 - 5 - Before using sabbath mode adjust the cavity temperature.

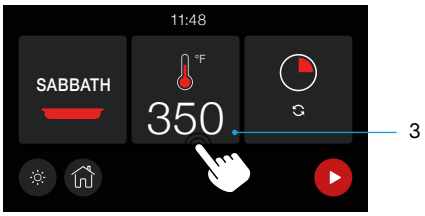

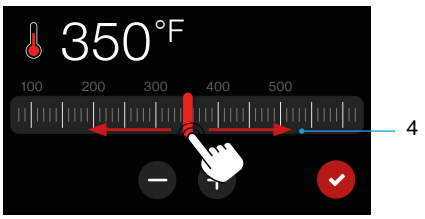

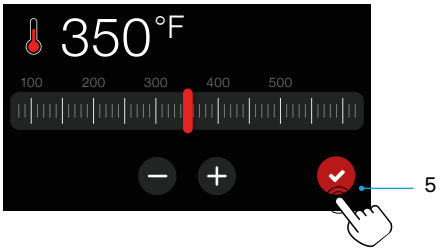





6- 7 - Fix the cooking time till 74 hours

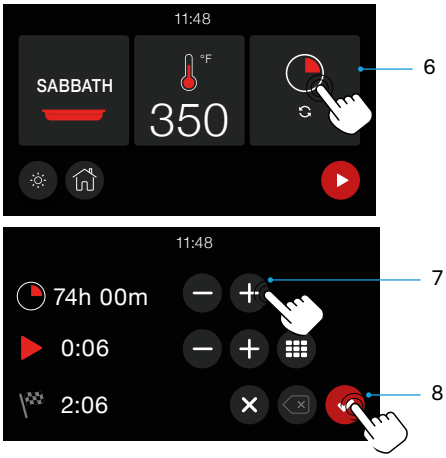

9- Starting cooking sabbath mode

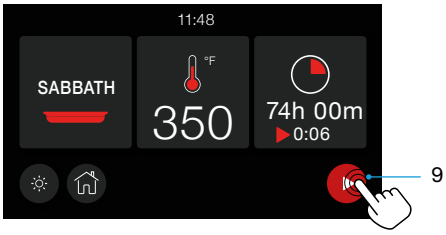

10.- During sabbath cooking it is possible to change the cavity temperature using the numeric keypad (e.g. we set 250°f) and then confirm with the key 

11- It is always possible to exit the sabbath function by pressing the off key for a few seconds 

.

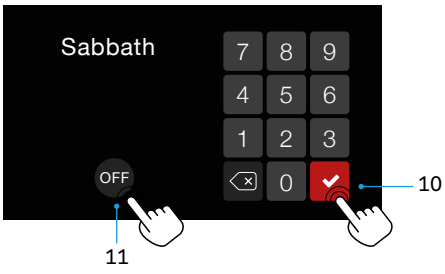

INSTRUCTIONS FOR USE
Accessories

Telescopic guides (available only in some models)

This solution is designed to enhance ergonomics, practicality, and safety when handling trays and pans in the oven. The kit consists of fully extendable side rails that slide on ball bearings to facilitate the removal and placement of trays. The rails are anti-tip for added safety. They can be removed for cleaning or repositioned, as shown in the photos below.

1. Pull down the part highlighted in red to remove it from the oven wall.
2. Turn them over and place them on a flat surface with the sliding guide side facing down..
3. To release the clip, loosen it with a flathead screwdriver..
4. Repeat the steps in reverse to reposition the guide..

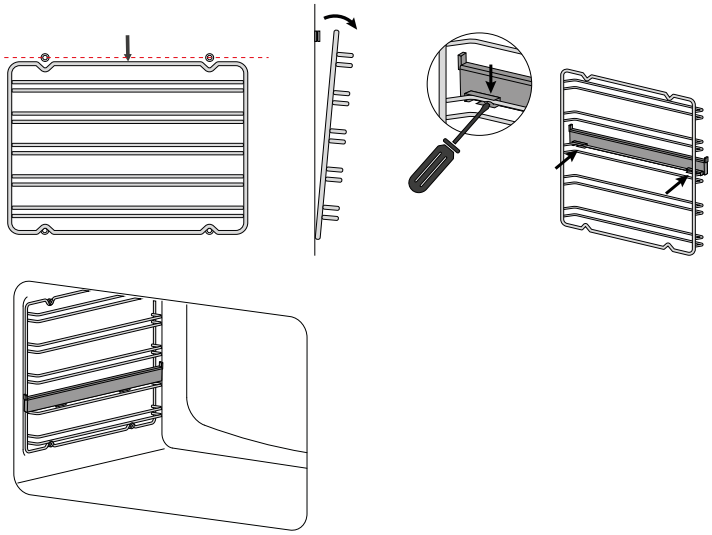

CLEANING AND MAINTENANCE
Recommendations for cleaning

Disassembly and Cleaning of the Glass Panels

The oven door consists of four glass panels. Clean the glass parts using non-abrasive kitchen paper and a common detergent. Do not use rough abrasive materials or sharp metal scrapers, as they may scratch the surface and cause the glass to break.
The inner glass panels are removable (the central glass must be repositioned correctly with the writing visible, as shown in Figure 3) to facilitate cleaning. To remove them, it is necessary to disassemble the oven door.

⚠ WARNING: All operations must always be carried out with the door removed from the oven and placed on a suitable surface to avoid damaging the front part of the door.

The central glass must be reinserted correctly with the writing visible, as shown in the following images:

1. Unscrew the two screws on the right and left sides of the upper trim.

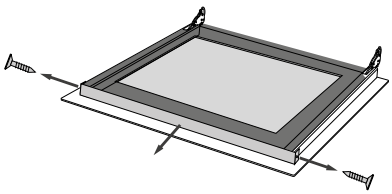

2. Lift the top glass and slide it outwards.

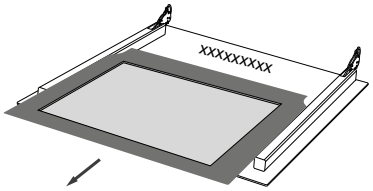

3. Slide the two central glass panels outwards.

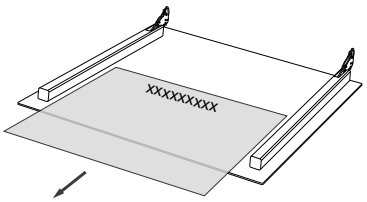

CLEANING AND MAINTENANCE

Recommendations for cleaning

Removing the door

To facilitate intensive cleaning of the oven, it is practical to remove the door by following these instructions:

1. Open the door
2. Move the latch C to the hinge section D following the steps:
3. Unscrew the screw
4. Remove the door

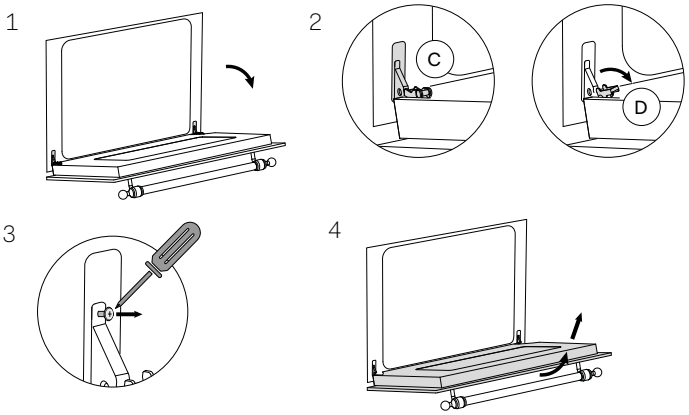

Lamp Replacement

If the oven light is not working, disconnect the appliance from the power supply, remove the protective glass of the lamp, and replace the bulb. It is important to ensure that the replacement bulb is suitable for high-temperature use and has the necessary specifications for such an application.

1. Loosen with a flathead screwdriver
2. Remove the lamp cover glass
3. Remove the lamp:
4. Replace and close it:

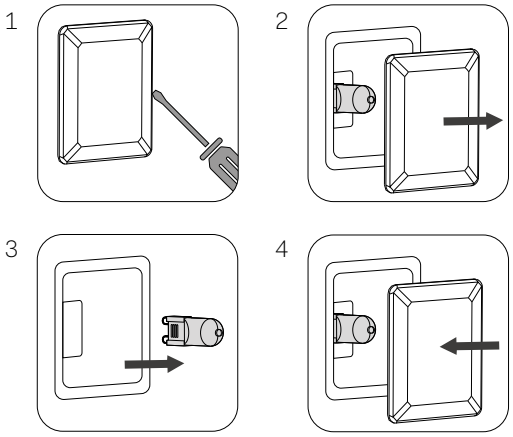

OVEN		
⚠ ATTENTION! Before carrying out any cleaning operations, disconnect the appliance from the mains and close the gas valve. The cooktop must be cleaned after it has been let cooling down.		
COMPONENT	CLEANING METHOD	WARNINGS
Oven interior	It is recommended to clean the oven after each use. Dirt is easier to clean if it is prevented from burning at high temperatures repeatedly. Remove all removable parts and wash them separately with warm water and non abrasive detergent. Clean the cooking cavity with a soft cloth soaked in a solution of warm water and ammonia, then rinse and dry.	Do not use steam cleaners for cleaning the oven interior. Do not use abrasive/corrosive detergents or sharp metal tools to clean the oven's glass door, as they may damage the surface and cause it to break.
Tray	Soak in a solution of warm water and mild soap. Dry after washing.	Remove food residues immediately after use.
Racks	Clean with hot water and non-abrasive detergents or with a suitable degreaser.	In case of baked-on and hardened dirt, it is recommended to soak the racks for a few hours before cleaning.

FRONT PANEL		
COMPONENT	CLEANING METHOD	WARNINGS
Stainless steel/ glass surface	Clean the details with lukewarm water and non corrosive liquid detergent, then dry them with a soft cloth or microfiber cloth.	Shine is maintained through periodic cleaning with specific products typically available on the market. Never use abrasive powders.
Painted surfaces	To maintain the characteristics of the painted parts, it is necessary to clean them frequently with soapy water.	Avoid leaving acidic or alkaline substances (vinegar, lemon juice, salt, tomato juice, etc.) on the painted parts, and do not wash the painted surfaces while they are still hot.

PROBLEM SOLVING

System errors

The syntax of the error code is: "E YY x", where:

YY = Error code

X = Cavity where the error is detected, or 0 for general errors

Warning issue



Door open warning with cooking in progress



Close the oven door

COOKING CHART

Convection oven (indicative values)

DISH	TEMP (°F)		TIME (MIN)
MEATS			
Roast beef	680 / 360	2/3	40/50
Roast ox	340 / 370	2/3	40/60
Roast veal	320 / 360	2/3	65/90
Roast lamb	280 / 320	2	100/130
Rare roast beef	360 / 370	2/3	40/45
Roast hare	340 / 360	2/3	80/100
Roast rabbit	320 / 340	2	80/100
Roast turkey	320 / 340	2	160/240
Roast goose	320 / 360	2/3	120/160
Roast duck	340 / 360	2/3	100/160
Roast chicken	360	2/3	90/120
FISH	320 / 360	2/3	15/25
PATISSERIE			
Fruit cake	360 / 390	2	40/50
Margherita cake	360 / 370	2	40/45
Brioches	340 / 360	2	40/60
Sponge cake	370 / 390	2	25/35
Donuts	320 / 360	2	35/45
Sweet puff pastry	360 / 390	2	20/30
Grape flatbread	370 / 390	2	30/40
Strudel	320	2	25/35
Savoiardi biscuits	300 / 360	2	50/60
Apple fritters	360 / 390	2	18/25
Savoiardi pudding	340 / 360	2	30/40
BAKERY			
Bread	360 / 390	3	45
Pizza	480	3	10/20
Toast	370 / 380	2	7

IMPORTANT: Introduce the food when the oven is preheated.

Grill cooking

For appliances with an electric grill, cooking is done with the door closed at 360°F. The food to be grilled should be placed on the corresponding grill, preferably on the fourth rack.

Static oven (indicative values)

DISH	TEMP (°F)		TIME (MIN)
MEATS			
Roast beef	440	2/3	60/80
Roast ox	480	2/3	50/60
Roast veal	440	2/3	60/80
Roast lamb	440	2	40/50
Rare roast beef	450	2/3	50/60
Roast hare	490	2/3	40/50
Roast rabbit	490	2	40/50
Roast turkey	490	2	50/60
Roast goose	440	2/3	60/70
Roast duck	490	2/3	45/60
Roast chicken	490	2/3	40/45
FISH	390/440	1/2	15/25
PATISSERIE			
Fruit cake	440	2	35/40
Margherita cake	350/390	2	50/60
Brioches	350/390	2	25/30
Sponge cake	430/480	2	20/30
Donuts	360/390	2	30/40
Sweet puff pastry	390/420	2	15/20
Grape flatbread	490	2	25/35
Strudel	360	2	20/30
Savoiardi biscuits	360/390	2	40/50
Apple fritters	390/430	2	15/20
Savoiardi pudding	390/430	2	20/30
BAKERY			
Bread	430	3	30
Pizza	480	3	10/20
Toast	480	3	5

IMPORTANT: Introduce the food when the oven is preheated.

Grill cooking

For appliances with an electric grill, cooking is done with the door closed at 360°F. The food to be grilled should be placed on the corresponding grill, preferably on the fourth rack.

Position of cooking grids

There are 5 shelf position - 1 is the lowest and 5 is the highest near to the grill.

If cooking one dish use shelf position 3, if cooking more than one tray depending on the height of the tray or food is suggested to cook on shelf positions 2 and 4.

Use the 4 and 5 shelf position for grilling and the grill pan in the botton shelf 1 to cath any drips.

The lower shelp position 1 can be used to slow cooking down or the temperature can be reduced.

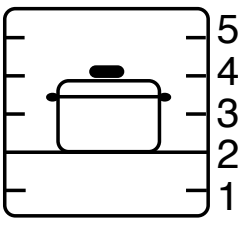

INSTALLATION

Key - Wiring diagram

00	Black
11	Brown
22	Red
33	White
44	Yellow
45	Yellow-green
55	Grey
66	Blue
C	Commutator
CP	Cooking probe
DU	Wax thermal actuator discharging steam
SD	Display
F	Phase
F1	Phase 1
K1	Earth wire terminal block
K3	Earth wire oven fan
K5	Earth wire upper resistance
K6	Earth wire oven light 1
K7	Earth wire oven light 2
K13	Earth wire grill resistance
K15	Earth wire frame

L1	Oven light
L2	Oven light
M	Terminal block
MDL	Door lock motor
ML	Lock microswitch
MUL	Unlock microswitch
N	Neutral
PB	Power board
PT1000	Temperature probe
R1	Upper heating element
R2	Lower heating element
R3	Grill heating element
R4	Circulating heating element
R6	Additional lower
RL	Limit resistance
SA	Power supply board
SD	Display board
TS2	Safety thermostat
VR	Oven fan
VT	Cooler fan

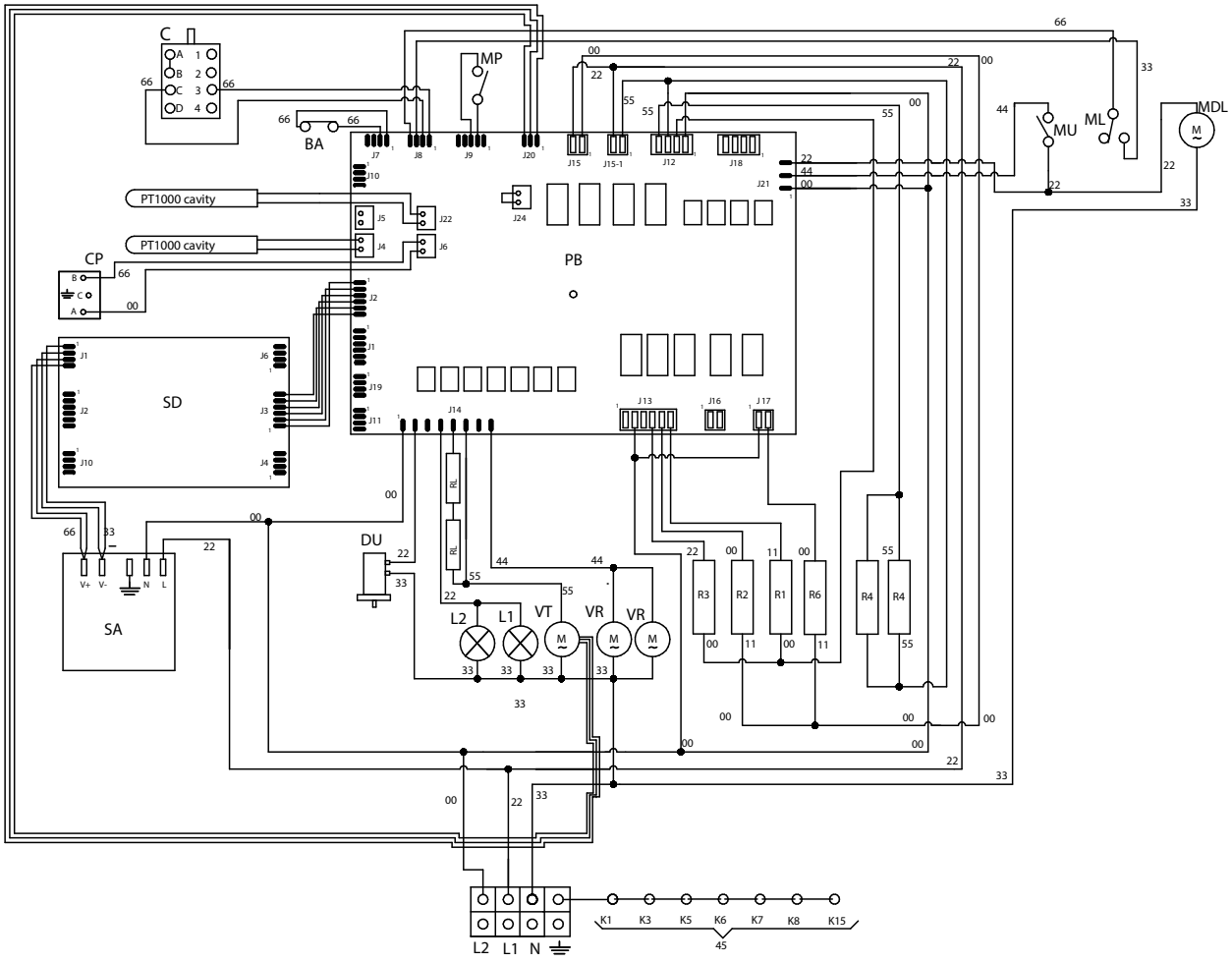

ELECTRICAL AND GAS POWER TABLE

	120/240V; 60 Hz		120/208V; 60 Hz	
TYPE UOV **BUILT-IN OVEN** Models	**ELECTRIC RATED INPUT [kW]**	**ELECTRIC RATED INPUT [A]**	**ELECTRIC RATED INPUT [kW]**	**ELECTRIC RATED INPUT [A]**
UOV30NTPY	5,7	24	4,3	21
UOV30GTPY	5,7	24	4,3	21
UOV30STPY	5,7	24	4,3	21
UOV30WTPY	5,7	24	4,3	21

Live,
Cook,
Love.

ilve.com

ILVE S.p.A Via Antoniana, 100 — 35011 — Campodarsego (PD) Italy
T. +39 049 9200990 / Email: mail@ilve.com

cod. EI33961080000EN 25/2026