AK9228BS
AK9234BS

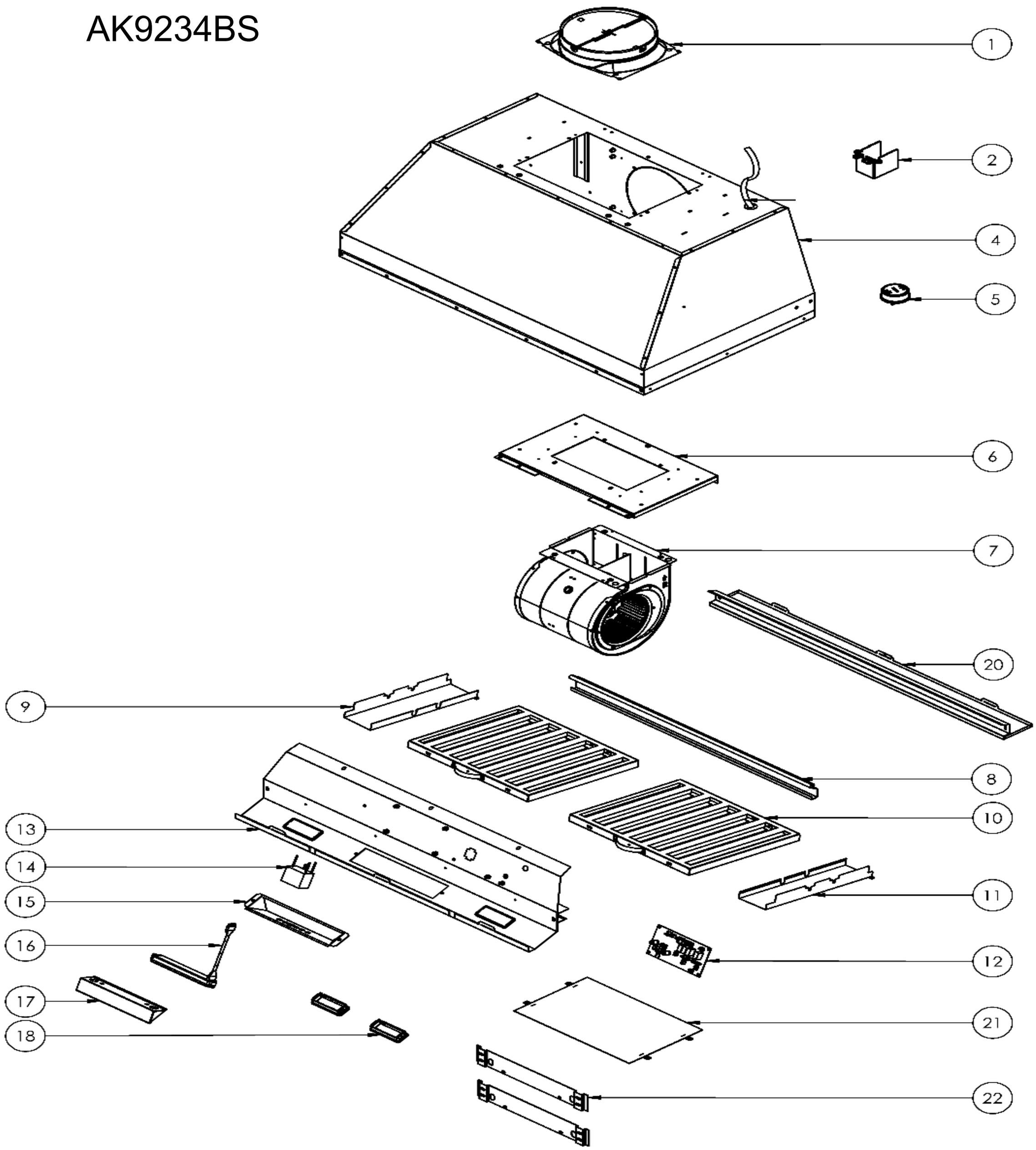

ZEPHYR

Monsoon I

AK9228BS, AK9234BS

Ref #	Part #	Description	Qty.
1	54050080	8 Inch Round Collar w/Damper	1
2	54200011	Electrical Junction Box	1
3	11030141	Electrical Power Cord	1
5	14000005	Wireless RF Remote Control	1
6	54190047	Single Internal Blower Plate	1
7	12120070	Blower	1
8	56130044	Residue Tray	1
9	50120184	Left Side Panel (AK9234BS) SN10 & SN11	1
9	50120259	Side Panel (AK9234BS) SN12+	1
10	50210039	Pro Baffle Filer	2
11	50120185	Right Side Panel (AK9234BS) SN10 & SN11	1
11	50120259	Side Panel (AK9234BS) SN12+	1
12	11010121	Control Board	1
13	50110299	Light Panel (AK9228BS)	1
13	50110300	Light Panel (AK9234BS)	1
14	12050028	Capacitor	1
15	52170055	Switch Cover Plate	1
15-1	01020056	Screw, Carriage, Switch Housing	2
15-2	00100003	Nut, Switch Housing	2
16	11000145	Switch Assembly	1
17	54140301	Switch Holding Bracket	1
18	Z0B0047	LumiLight LED, 6W, DC	2
19	05000090	Hardware Packet	1
20	50120200	Rear Panel (AK9228BS)	1
20	50120201	Rear Panel (AK9234BS) SN10 & SN11	1
20	50120260	Rear Panel (AK9234BS) SN12+	1
21	52170054	Top Cover Plate	1
19	54140146	Rear Motor Mount Brackets	2

AK9240BS
AK9246BS

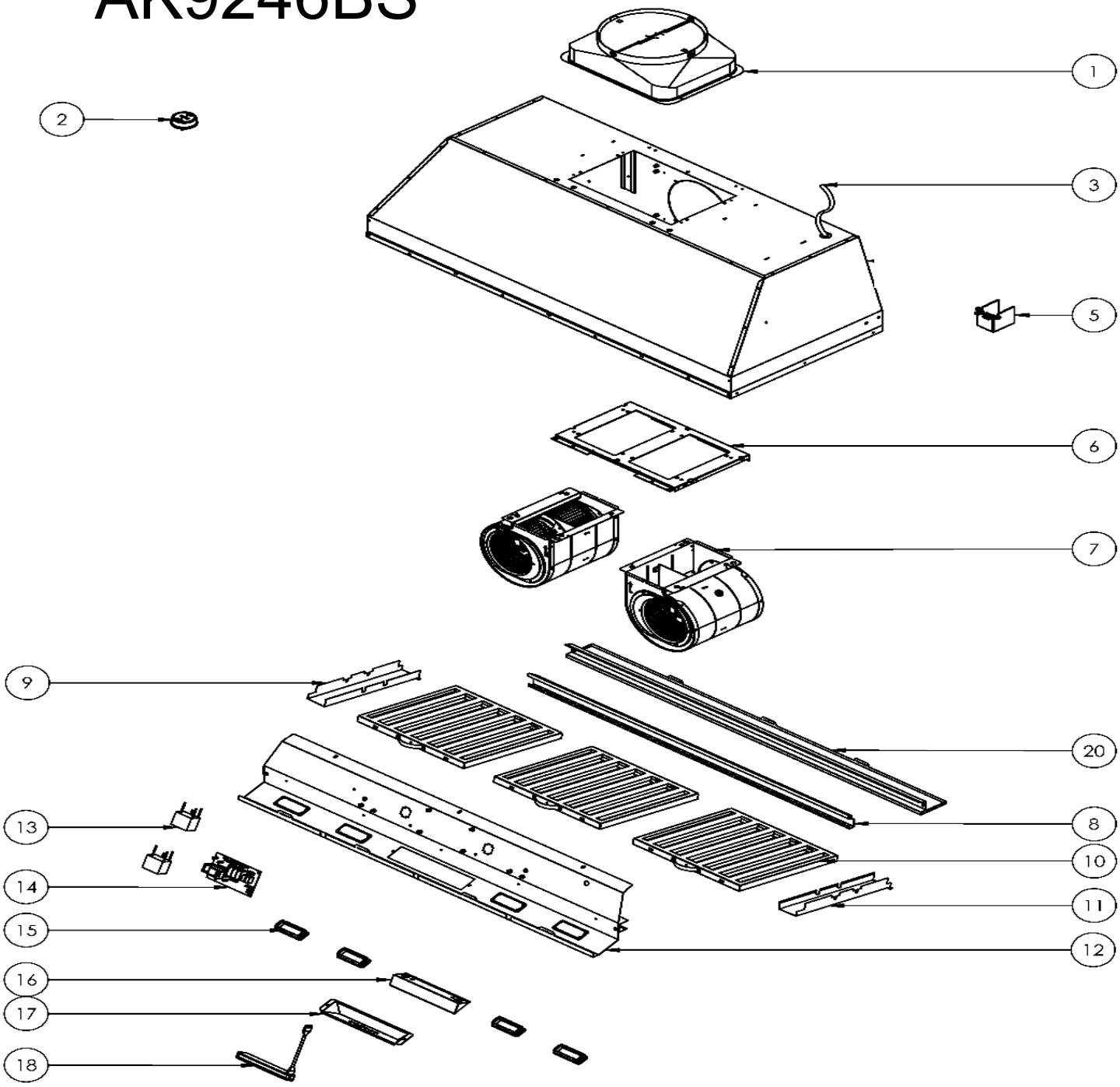

ZEPHYR

Monsoon I

AK9240BS, AK9246BS

Ref #	Part #	Description	Qty.
1	54050081	10 Inch Round Collar w/Damper	1
2	14000005	Wireless RF Remote Control	1
3	11030020	Electrical Power Cord	1
5	54200011	Electrical Junction Box	1
6	54190038	Dual Internal Blower Plate	1
7	12120070	Blower	2
8	56130044	Residue Tray (AK9240BS)	1
8	56130045	Residue Tray (AK9246BS)	1
9	50120186	Left Side Panel (AK9240BS) SN10-12	1
9	50120261	Side Panel (AK9240BS) SN13+	1
9	50120188	Left Side Panel (AK9246BS) SN10-12	1
9	50120263	Side Panel (AK9246BS) SN13+	1
10	50210039	Pro Baffle Filer (AK9240BS x 2)	3
11	50120187	Right Side Panel (AK9240BS) SN10-12	1
11	50120261	Side Panel (AK9240BS) SN13+	1
11	50120189	Right Side Panel (AK9246BS) SN10-12	1
11	50120263	Side Panel (AK9246BS) SN13+	1
12	50110301	Light Panel (AK9240BS)	1
12	50110302	Light Panel (AK9246BS)	1
13	12050028	Capacitor	2
14	11010122	Control Board	1
15	Z0B0047	LumiLight LED, 6W, DC (AK9240BS x 2)	4
16	54140301	Switch Holding Bracket	1
17	52170055	Switch Cover Plate	1
17-1	01020056	Screw, Carriage, Switch Housing	2
17-2	00100003	Nut, Switch Housing	2

18	11000145	Switch Assembly	1
19	05000152	Hardware Packet	1
20	50120202	Rear Light Panel (AK9240BS) SN10-12	1
20	50120262	Rear Panel (AK9240BS) SN13+	1
20	50120203	Rear Light Panel (AK9246BS) SN10-12	1
20	50120264	Rear Panel (AK9246BS) SN13+	1