FRIGIDAIRE

18 Cu. Ft. Garage Ready Top Freezer Refrigerator

Top Freezer Refrigerator

Available Products: FFHT1814YB, FFHT1814YW

Available Colors: Black, White

Version: 10/25

Product Specifications

Refrigerator

Air Filter Ready	No
Crisper Color	Clear
Door Bin Color	White
Interior Lighting	LED
Shelf Material	Wire
Number of Adjustable Gallon Door Bins	1
Number of Fixed 2 Liter Door Bins	2
Number of Adjustable Shelves	2
Number of Crispers	2

Ice Maker

Ice Maker Ready	Yes

Controls

Control Location	Top Center of Fresh Food

Dimensions and Volume

Height With Hinge	66 9/16"
Height Without Hinge	66 1/16"
Width	29 1/2"
Width of Cabinet	29 2/5"
Depth of Cabinet	25 3/16"
Depth With Door	30"
Depth With Door 90° Open	57"
Depth With Door and Handle	30"
Freezer Capacity	4.67 Cu. Ft.
Fresh Food Capacity	13.5 Cu. Ft.
Total Capacity	18.17 Cu. Ft.

General Specifications

Annual Energy	366 kWh
Refrigerant Type	R-600A
Warranty - Labor	1 Year
Warranty - Parts	1 Year

Performance Certifications and Approvals

ENERGY STAR Certified	Yes

Accessories

Optional Ice Maker Kit	IMKTTM0019

Freezer

Automatic Defrost	Yes
Door Bin Color	White
Shelf Material	Glass
Number of Fixed Door Bins	2
Number of Adjustable Shelves	1

Garage Ready

Garage Ready	Yes

Exterior

Door Finish	Textured
Door Swing	Reversible

Electrical Specifications

Amps @ 120 Volts	3 Amps
Minimum Circuit Required	15 Amps

Certifications and Approvals

ADA Compliant	Yes

Safety Certifications and Approvals

UL Listed	Yes

Right to Repair Details

Right to Repair	Partially Available - Visit frigidaire.ca/right-to-repair for more information

For planning purposes only. We reserve the right to change specifications or discontinue models without notice.
Refer to Product Installation Guide for detailed installation instructions on the web at frigidaire.ca
Electrolux Major Appliances, N.A.
CANADA • 5855 Terry Fox Way • Mississauga, ON L5V 3E4 • 1-800-265-8352 • frigidaire.ca

18 Cu. Ft. Garage Ready Top Freezer Refrigerator	5604
Available Products: FFHT1814YB, FFHT1814YW	Available Colors: Black, White
Version: 10/25	

Installation Diagram

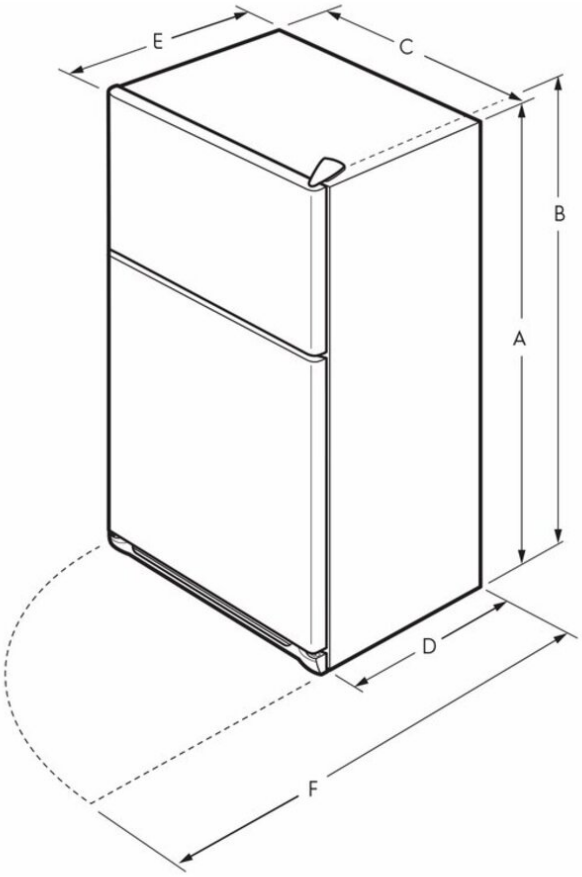

A	65 7/8"
B	66 3/8"
C	30"
D	26 5/8"
E	30 3/8"
F	57"

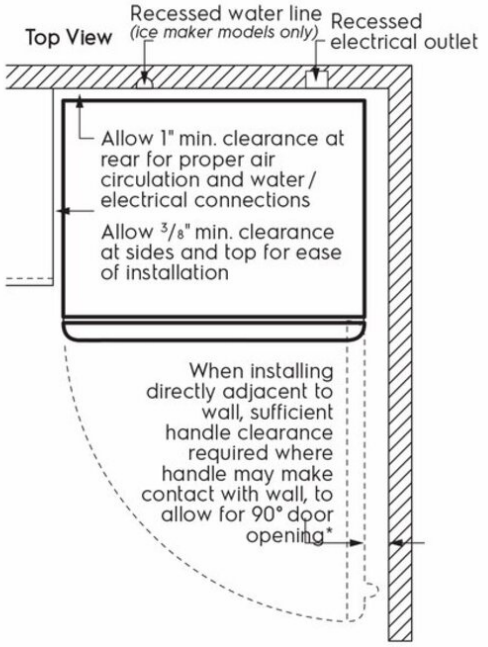

* When installing refrigerator adjacent to wall, cabinet or other appliance that extends beyond front edge of unit, 20" minimum clearance recommended to allow for optimum 140° door swing, providing complete crisper access and removal.
(Absolute 3" minimum clearance will ONLY allow for 90° door swing which will provide limited crisper access with restricted removal.)