36" OUTDOOR GAS GRILL - NON-COMBUSTIBLE INSTALLATION

OG36

FEATURES

Two individually contained 25,000 Btu grill burners deliver exceptional high to low control

Have it built-in or make it a free-standing cart

Gain nuanced control and more taste from the direct and radiant heat provided by ceramic briquettes

Designed with a stainless-steel cover

Grill any time of day with LED-lit signature Wolf red control knobs

The two position rotisserie handles dishes large and small with a 14,000 Btu infrared burner

Resists the elements with its heavy-duty, all-weather stainless-steel construction

Using our easy-open, double-wall hood provides more heat for more efficient grilling

Illuminates your grilling surface with two powerful halogen lights

Eliminates the need for a pilot light with electric hot surface ignitors

Powerful 25,000 Btu infrared sear zone is perfect for searing in delicious flavor for mouthwatering results

ACCESSORIES

36" Grill Liner

Black Knobs

Built-In Cover

Cart Cover

Combo Door and Drawer

Double Storage Drawer

Griddle Plate

LP Regulator Kit

Outdoor Grill Cart

Paper Towel Drawer

Rotisserie Conversion

Single Drawer Storage

Triple Storage Drawer

Trash/Recycling Drawers

Access Doors

Dry Storage

Accessories available through an authorized dealer.
For local dealer information, visit subzero-wolf.com/locator.

KNOB OPTIONS

GRILL SPECIFICATIONS

- Halogen lighting
- External reading thermometer
- Rotisserie
- 3 removable stainless steel burner grate; 1 warming rack
- Removable drip tray

Specifications are subject to change without notice. This information was generated on March 5, 2026. Verify specifications prior to finalizing your cabinetry/enclosures.

36" OUTDOOR GAS GRILL - NON-COMBUSTIBLE INSTALLATION

PRODUCT SPECIFICATIONS

Model	OG36
Dimensions	36"W x 27"H x 30"D
Weight	249 lbs
Electrical Supply	120 VAC, 60 Hz
Electrical Service	15 amp dedicated circuit
Gas Supply	3/4" ID line
Gas Inlet	1/2" NPT female
Power Cord Length	5 Feet
Receptacle	3-prong grounding-type

ELECTRICAL

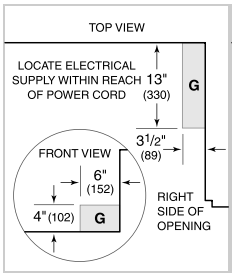

PLUMBING

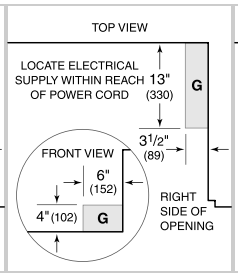

GAS

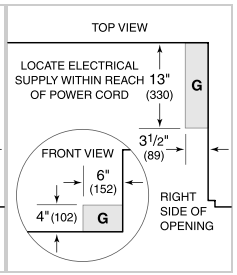

NOTE: Dimensions in parenthesis are in millimeters unless otherwise specified

DIMENSIONS

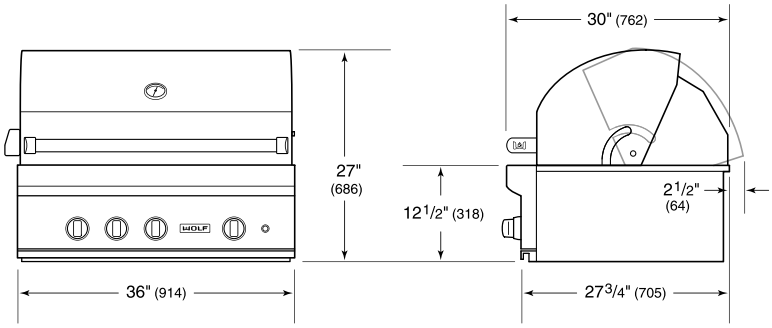

NON-COMBUSTIBLE INSTALLATION

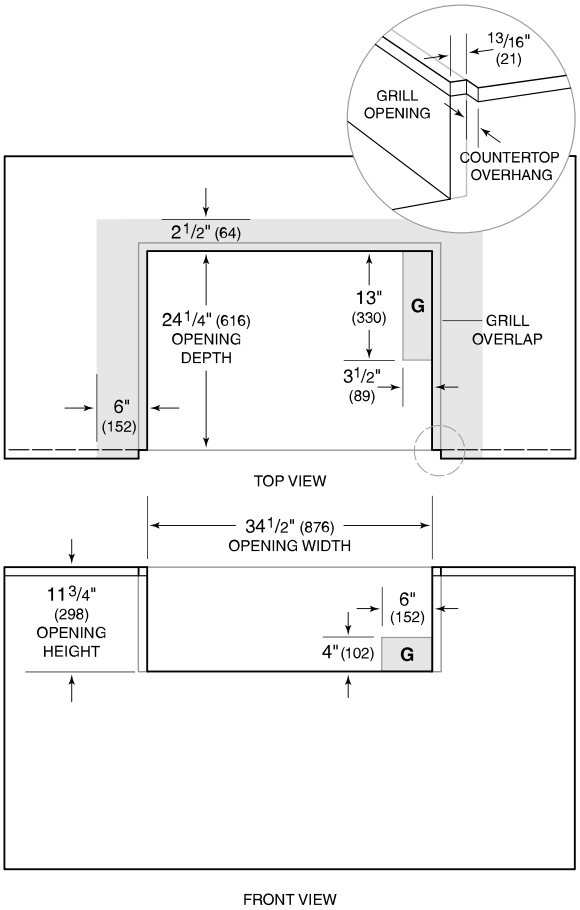

NOTE: Shaded area above countertop indicates minimum clearance to combustible surfaces, combustible materials cannot be located within this area.