GE APPLIANCES

Service Manual

NF80X***V**R

80% Two Stage Variable Speed
Ultra Low NOx Gas Furnace

Contact GE Appliances at:

Homeowner: **GEAppliances.com**
HVAC Pro: **GEAppliancesAirandWater.com**
or
866.814.3633

Split System USAC and USHP matches:
AHRIDirectory.org

READ CAREFULLY.
KEEP THESE INSTRUCTIONS.

31-5001003 Rev. 0 09-25

General Information

NF80X***V**R series units are 80% efficiency gas furnaces used for upflow or horizontal applications only. These units are manufactured with heat exchangers formed of aluminized steel tubes. NF80X***V**R units are available in heating inputs of 60,000 to 100,000 Btuh and cooling applications up to 5 tons.

Units are approved for installations up 4500 ft. NF80X***V**R model units are equipped with a two-stage variable speed integrated control. NF80X***V**R units meet the California Nitrogen Oxides (NOx) Standards (40 Ng/J) and California Seasonal Efficiency requirements. All units use a redundant gas valve to assure safety shut-off as required by C.S.A.

All specifications in this manual are subject to change. Procedures outlined in this manual are presented as a recommendation only and do not supersede or replace local or state codes. In the absence of local or state codes, the guidelines and procedures outlined in this manual (except where noted) are recommendations only and do not constitute code

⚠WARNING

- This furnace is equipped with an ignition control factory enabled for use with A2L refrigerant systems. Disabling the refrigerant detection functionality on A2L system is prohibited by safety codes. Refer to furnace installation instructions for refrigerant system setup.
- Improper installation, adjustment, alteration, service or maintenance can cause property damage, personal injury or loss of life. Installation and service must be performed by a licensed professional HVAC installer or equivalent, service agency, or the gas supplier.
- Fire Hazard. Use of aluminum wire with this product may result in a fire, causing property damage, severe injury or death. Use copper wire only with this product.

⚠CAUTION

- As with any mechanical equipment, contact with sharp sheet metal edges can result in personal injury. Take care while handling this equipment and wear gloves and protective clothing.
- Failure to use properly sized wiring and circuit breaker may result in property damage. Size wiring and circuit breaker(s) per Product Specifications bulletin (EHB) and unit rating plate.

Technical Specifications

Gas Heating Performance		**Model**	**NF80X060V3AR**	**NF80X080V4BR**	**NF80X100V5CR**
		[1]AFUE	80%	80%	80%
	High Fire	Input - Btuh	60,000	80,000	100,000
		Output - Btuh	47,000	63,000	79,000
		Temperature Rise Range - ºF	30-60	30-60	30-60
		Gas Manifold Pressure (in. w.g.) Nat. Gas Only	0.05	0.05	0.05
	Low Fire	Input - Btuh	39,000	52,000	65,000
		Output - Btuh	32,000	43,000	53,000
		Temperature Rise Range - ºF	20-50	20-50	25-50
		Gas Manifold Pressure (in. w.g.) Nat. Gas Only	0.05	0.05	0.05
High static - in. w.g.		Heating	.08	.08	.08
		Cooling	1.0	1.0	1.0
Connections		Flue connection - in. round	4	4	4
		[2] Air Intake - in. round	2	2	2
		Gas Pipe Size IPS	1/2	1/2	1/2
Indoor Blower		Wheel diameter x width - in.	10 x 8	11-1/2 x 9	11-1/2 x 10
		Motor Output - HP	1/2	1.0	1.0
		Tons of add-on cooling	2 - 3	2.5 - 4	3-5
		Air Volume Range - CFM	565 - 1295	504 - 1710	900 - 2125
Electrical Data		Voltage	120 volts - 60 hertz - 1 phase		
		Blower motor full load amps	7.7	12.8	12.8
		Maximum overcurrent protection	15	20	20
Shipping Data		lbs. - 1 package	121	142	158

NOTE - Filters and provisions for mounting are not furnished and must be field provided.
[1] Annual Fuel Utilization Efficiency based on DOE test procedures and according to FTC labeling regulations. Isolated combustion system rating for non-weatherized furnaces.
[2] Requires furnished Air Intake Pipe Assembly.

Optional Accessories

	"A" Width Models	"B" Width Models	"C" Width Models
CABINET ACCESSORIES			
Return Air Base - Upflow only	65W75	50W98	50W99
CONTROLS			
[1]Remote Outdoor Temperature Sensor	X2658	X2658	X2658
[2]Discharge Air Temperature Sensor	88K38	88K38	88K38
Transformer (75VA)	27J32	27J32	27J32
INTAKE / VENTING			
Low Profile Air Intake Pipe Kit - 2 in.	25B23	25B23	25B23

[1] Remote Outdoor Temperature Sensor is used with conventional units. Allows the thermostat to display outdoor temperature. Required in dual-fuel applications.
[2] Optional for service diagnostics.
[3] Cleanable polyurethane, frame-type filter.

REFRIGERANT DETECTION SYSTEM (RDS) COMPONENTS	
Description	**Order No.**
Refrigerant Detection System (RDS) Coil Sensor Kit	27V53

HIGH ALTITUDE OPERATION
Units may be installed at altitudes up to 7500 ft. above sea level without any modification.

Blower Data

NF80X060V3AR BLOWER PERFORMANCE (less filter)
BOTTOM OR SIDE RETURN AIR
0 through 1.0 in. w.g. External Static Pressure Range

HEATING								
[1] Heating Speed DIP Switch Settings	First Stage Heating Speed - cfm				Second Stage Heating Speed - cfm			
+24%	1015				1115			
+18%	955				1060			
+12%	895				995			
+6%	845				935			
Factory Default	785				875			
-6%	730				815			
-12%	685				755			
-18%	630				700			
COOLING								
[1] Cooling Speed DIP Switch Settings	First Stage Cooling Speed - cfm				Second Stage Cooling Speed - cfm			
	Low	Medium-Low	Medium-High	[2] High	Low	Medium-Low	Medium-High	[2] High
+	680	740	785	915	935	1025	1150	1295
Factory Default	625	660	720	815	835	930	1040	1185
-	565	580	650	740	745	825	925	1035

[1] Cooling and heating speeds are based on a combination of DIP switch settings on the furnace control. Refer to Installation Instructions for specific DIP Switch Settings.
[2] Factory default setting.
NOTES - The effect of static pressure is included in air volumes shown.
- First stage HEAT is approximately 91% of the same second stage HEAT.
- First stage COOL (two-stage air conditioning units only) is approximately 70% of the same second stage COOL speed position.
- Continuous Fan Only speed is selectable at 28% and 38% of the selected second stage cooling speed - minimum 250 cfm.
- Zoning System Applications - Minimum blower speed is 250 cfm.

NF80X080V4BR BLOWER PERFORMANCE (less filter)
BOTTOM RETURN AIR
0 through 1.0 in. w.g. External Static Pressure Range

HEATING								
[1] Heating Speed DIP Switch Settings	First Stage Heating Speed - cfm				Second Stage Heating Speed - cfm			
+24%	1295				1445			
+18%	1230				1375			
+12%	1155				1290			
+6%	1095				1215			
Factory Default	1015				1145			
-6%	950				1065			
-12%	885				985			
-18%	810				910			
COOLING								
[1] Cooling Speed DIP Switch Settings	First Stage Cooling Speed - cfm				Second Stage Cooling Speed - cfm			
	Low	Medium-Low	Medium-High	[2] High	Low	Medium-Low	Medium-High	[2] High
+	635	880	1020	1190	990	1270	1490	1710
Factory Default	565	775	915	1070	885	1135	1345	1540
-	545	670	820	955	775	1015	1205	1390

[1] Cooling and heating speeds are based on a combination of DIP switch settings on the furnace control. Refer to Installation Instructions for specific DIP Switch Settings.
[2] Factory default setting.
NOTES - The effect of static pressure is included in air volumes shown.
- First stage HEAT is approximately 91% of the same second stage HEAT.
- First stage COOL (two-stage air conditioning units only) is approximately 70% of the same second stage COOL speed position.
- Continuous Fan Only speed is selectable at 28% and 38% of the selected second stage cooling speed - minimum 380 cfm.
- Zoning System Applications - Minimum blower speed is 380 cfm.

Blower Data

NF80X100V5CR BLOWER PERFORMANCE (less filter)

BOTTOM RETURN AIR, RETURN AIR FROM BOTH SIDES OR RETURN AIR FROM BOTTOM AND ONE SIDE

0 through 0.8 in. w.g. (Heating) and 0 through 1.0 in. w.g. (Cooling) External Static Pressure Range

HEATING		
[1] Heating Speed DIP Switch Settings	First Stage Heating Speed - cfm	Second Stage Heating Speed - cfm
+24%	1580	1735
+18%	1495	1640
+12%	1420	1550
+6%	1335	1480
Factory Default	1265	1395
-6%	1175	1300
-12%	1110	1220
-18%	1035	1135

COOLING								
[1] Cooling Speed DIP Switch Settings	First Stage Cooling Speed - cfm				Second Stage Cooling Speed - cfm			
	Low	Medium-Low	Medium-High	[2] High	Low	Medium-Low	Medium-High	[2] High
+	1105	1155	1280	1470	1535	1615	1765	2050
Factory Default	995	1055	1175	1325	1375	1435	1600	1855
-	900	945	1050	1215	1260	1305	1435	1670

[1] Cooling and heating speeds are based on a combination of DIP switch settings on the furnace control. Refer to Installation Instructions for specific DIP Switch Settings.
[2] Factory default setting.

NOTES - The effect of static pressure is included in air volumes shown.

- First stage HEAT is approximately 91% of the same second stage HEAT.
- First stage COOL (two-stage air conditioning units only) is approximately 70% of the same second stage COOL speed position.
- Continuous Fan Only speed is selectable at 28% and 38% of the selected second stage cooling speed - minimum 450 cfm.
- Zoning System Applications - Minimum blower speed is 450 cfm.

Parts Arrangement

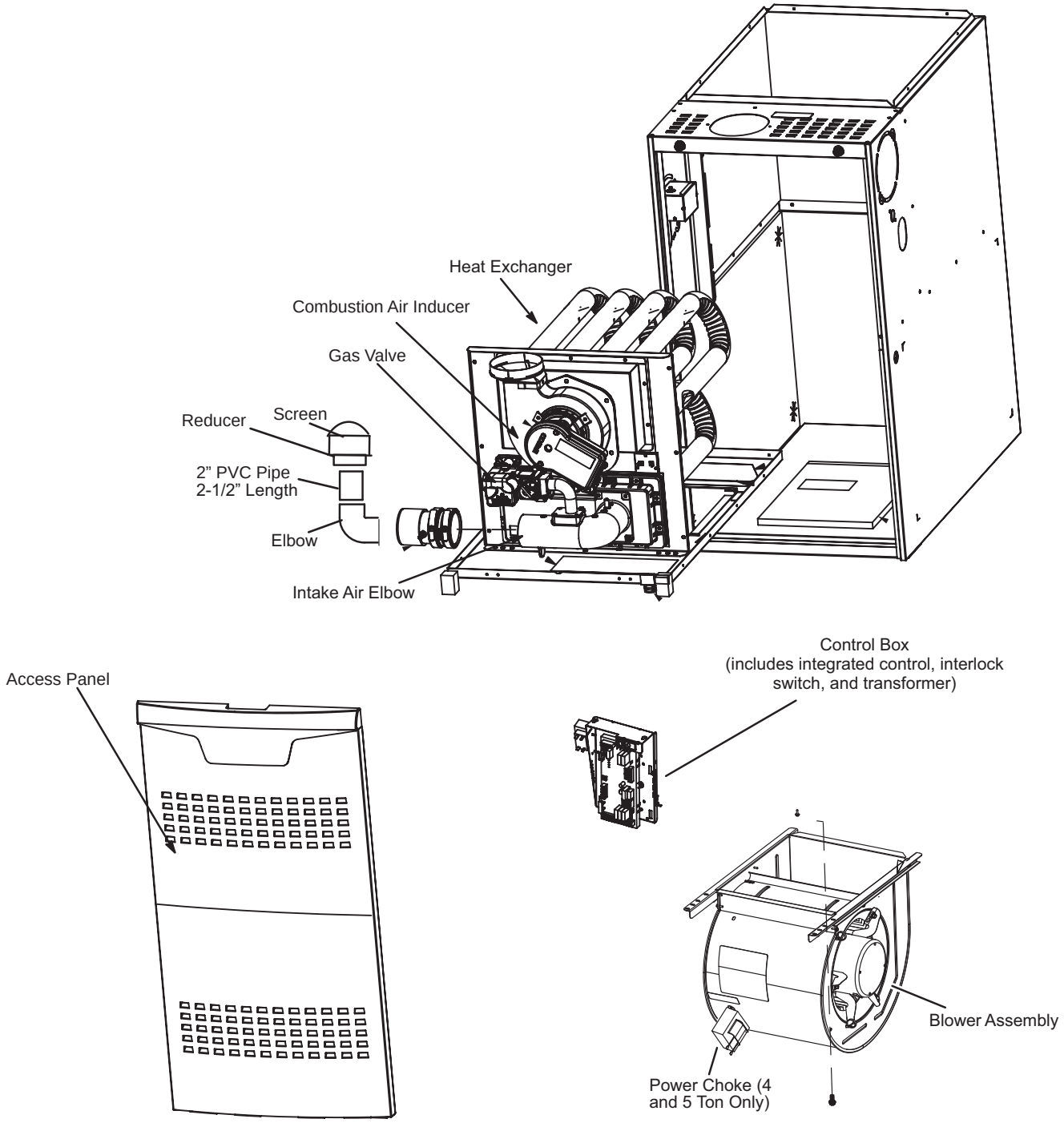

Figure 1.

Service Information

UNIT COMPONENTS

NF80X***V**R unit components are shown in **Figure 1**. The gas valve, combustion air inducer and burners can be accessed by removing the access panel. Electrical components are in the control box (**Figure 2**) found in the blower section.

Units are factory equipped with a bottom return air panel in place. The panel is designed to be field removed as required for bottom air return. Markings are provided for side return air and may be cut out in the field.

ELECTROSTATIC DISCHARGE (ESD)
Precautions and Procedures

⚠CAUTION Electrostatic discharge can affect electronic components. Take precautions to neutralize electrostatic charge by touching your hand and tools to metal prior to handling the control.

Control Box

Control Transformer (T1)

A transformer located in the control box provides power to the low voltage section of the unit. Transformers on all models are rated 40VA with a 120V primary and 24V secondary.

⚠IMPORTANT

- When matching this gas furnace with zoning, dual fuel or other 24V accessories, It is recommended to replace the factory installed transformer with kit 27J32.
- Kit 27J32 contains a 75VA transformer, so you do not overload the original 40VA transformer.

Door Interlock Switch (S51)

A door interlock switch rated 14A at 125VAC is wired in series with line voltage. When the inner blower access panel is removed the unit will shut down.

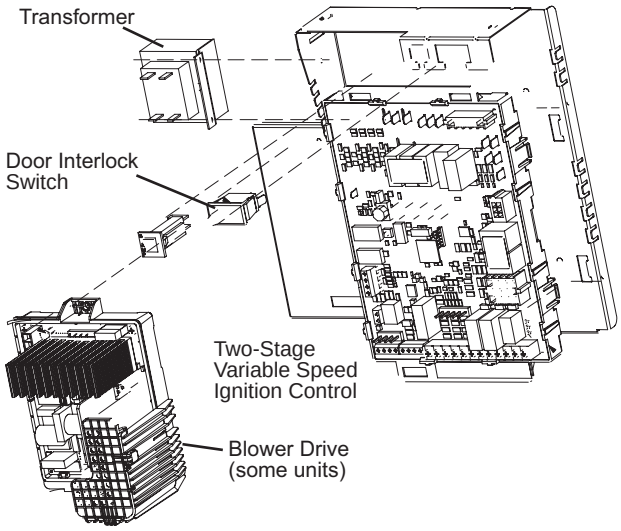

Figure 2. Control Box

Circuit Breaker (CB8)

A 24V circuit breaker is also located in the control box. The switch provides overcurrent protection to the transformer (T1). The breaker is rated at 3A at 32V. If the current exceeds this limit the breaker will trip and all unit operation will shut down. The breaker can be manually reset by pressing the button on the face. See **Figure 3**.

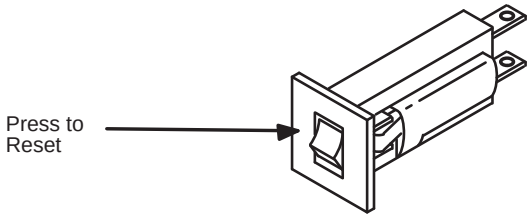

Figure 3. Circuit Breaker CB8

⚠WARNING **Shock hazard.**

- Disconnect power before servicing. Control is not field repairable. If control is inoperable, simply replace entire control.
- Can cause injury or death. Unsafe operation will result if repair is attempted.

Integrated Control (A92)

Units are equipped with a communicating two-stage, variable speed integrated control. This control is used with any communicating enabled thermostat as part of a communicating comfort system. The control can also operate with a non-communicating conventional single or two-stage thermostat. The system consists of a ignition / blower control (FIGURE 4) with control pin designations in TABLE 1, TABLE 2, TABLE 3, TABLE 4 and ignitor.

The control and ignitor work in combination to ensure furnace ignition and ignitor durability. The control provides gas ignition, safety checks and indoor blower control with two-stage gas heating.

The furnace combustion air inducer, gas valve and indoor blower are controlled in response to various system inputs such as thermostat signal, pressure and limit switch signal and flame signal. The control features a seven-segment LED display, indicating furnace status (including indoor blower) and error codes. The LED flashes in single digits. For example using TABLE 5 under LIMIT CODE, an “E” followed by “2” followed by “5” followed by “0”, the limit switch circuit is open. The control also has two unpowered (dry) 1/4” contacts for a humidifier and a 120 volt accessory terminal. Both rated at (1) one amp each.

UNIT COMPONENTS (Cont.)

Electronic Ignition

At the beginning of the heat cycle the integrated control monitors the first stage and second stage combustion air inducer prove switch. The control will not begin the heating cycle if the first stage prove switch is closed (by-passed). Likewise the integrated control will not begin the second stage heating cycle if the second stage prove switch is closed, and will remain in first stage heat. However, if the second stage prove switch closes during the first stage heat pre-purge, the control will allow second stage heat.

After the 15-second pre-purge period, the ignitor warms up for 20 seconds after which the gas valve opens for a 4-second trial for ignition. The ignitor energizes during the trial until flame is sensed. If ignition is not proved during the 4-second period, the control will try four more times with an inter purge and warm-up time between trials of 35 seconds. After a total of five trials for ignition (including the initial trial), the control goes into Watchguard-Flame Failure mode. After a 60-minute reset period, the control will begin the ignition sequence again.

Two Stage Operation / Thermostat Selection DIP Switch

The control can be utilized in two modes: SINGLE-STAGE thermostat or TWO-STAGE thermostat. The thermostat selection is made using a DIP switch and must be positioned for the particular application. DIP switch 1, labeled T"STAT HEAT STAGE is factory-set in the OFF position for use with a two-stage thermostat. Move the DIP switch to ON for use with a single stage thermostat.

While in the single-stage thermostat mode, the burners will always fire on first-stage heat. The combustion air inducer will operate on low speed and indoor blower will operate on low heat speed. The unit will switch to second stage heat after a "recognition period". DIP switch 2, labeled SECOND STAGE DELAY, is factory set in the OFF position for a 7 minute recognition period. The switch can be moved to the ON position for a 12 minute recognition period, after which time the unit will switch to secondstage heat.

While in the two-stage thermostat mode (two DIP switch setting) the burners will fire on first-stage heat. The combustion air inducer will operate on low speed and indoor blower will operate on low heat speed. The unit will switch to second-stage heat on call from the indoor thermostat. If there is a simultaneous call for first and second stage heat, the unit will fire an first stage heat and switch to second stage heat after 30 seconds of operation. See Sequence of Operation flow charts in the back of this manual for more detail.

Table 1.

1/4" Quick Connect Terminals	
120V HUM	Power for Humidifier (120VAC)
LINE	Incoming Power Line (120VAC)
XFMR	Transformer Primary (120VAC)
CIRC	Indoor Blower Motor (120VAC)
ACC	Accessory (120VAC)
24V HUM	Humidifier (24VAC)
NEUTRALS	Neutral (5)

Table 2.

12 PIN MAIN HARNESS	
1	Main Valve High
2	High Pressure Switch
3	Rollout Input
4	Ground
5	24vac Hot
6	High Limit Switch
7	Main Valve Low
8	Main Valve Common
9	24vac Return
10	Ground
11	Rollout Switch Output
12	Low Pressure Switch

Table 3.

Thermostat Input Terminals	
W1	Low Stage Heat
W2	High Stage Heat
G	Fan
Y1	Low Stage Cool
Y2	High Stage Cool
C	Thermostat Common / Ground
R	24vac Power To The Thermostat
DH	Dehumidfication (Comm Only)
H	24v Humidifier Output
L	Lsom (Comm Only)
O	Heat Pump Reversing Valve
DS	Dehumidification (Non-Comm Only)

Table 4.

Low GWP Interface	
LGWP1	Low GWP Sensor #1 Interface
LGWP2	Low GWP Sensor #2 Interface
ALARM	Interface to Low GWP Leak Audible Alarm (Dry Contact)
ZONE	Interface to Zoning Control (Dry Contact)
LGWP TEST	Push Button to Test Low GWP Functionality

UNIT COMPONENTS (Cont.)

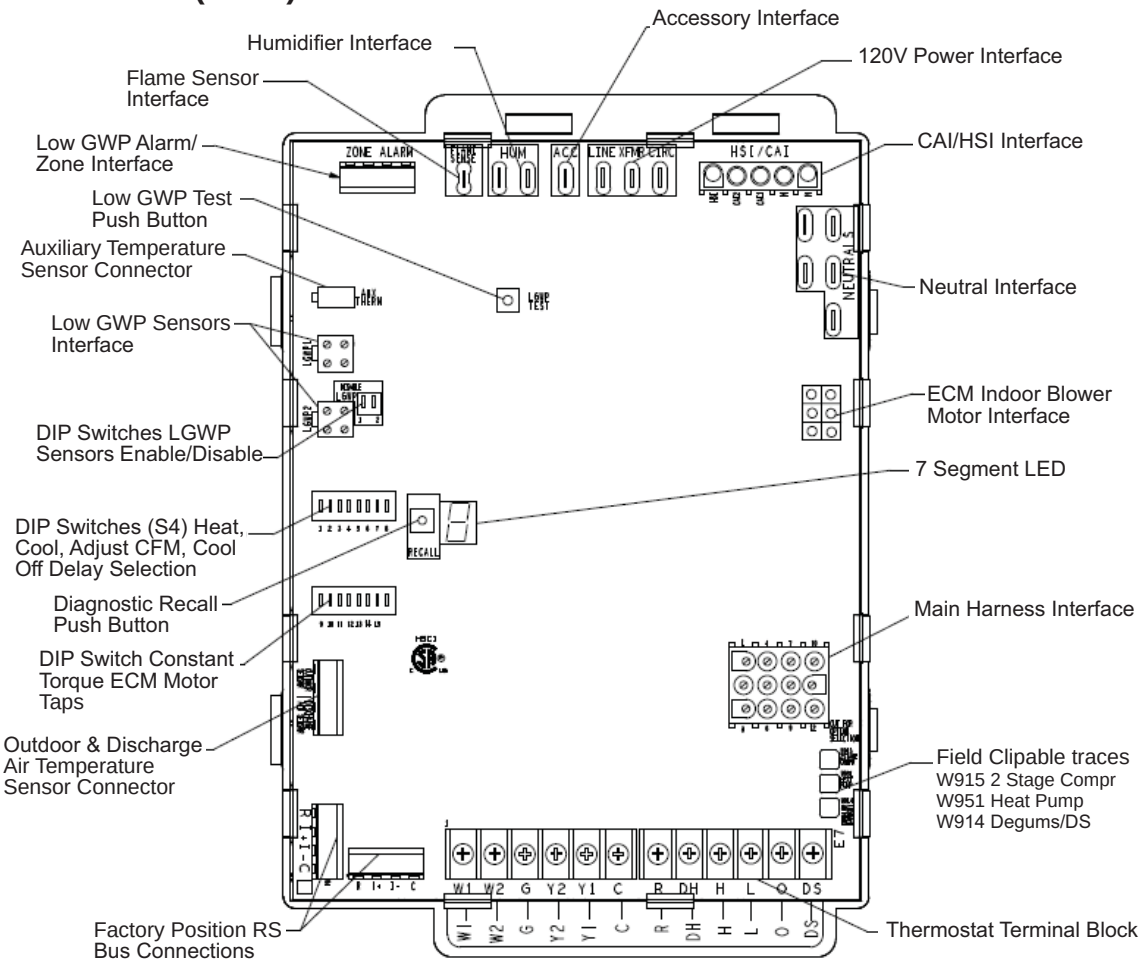

Figure 4. Two Stage, Variable Speed, Communicating

Diagnostic LED (Figure 4)

The seven-segment diagnostic LED displays operating status, target airflow, error codes and other information.

Diagnostic Push Button (Figure 4)

The diagnostic push button is located adjacent to the seven-segment diagnostic LED. This button is used to enable the Error Code Recall “E” mode and the Flame Signal “F” mode. Press the button and hold it to cycle through a menu of options. Every five seconds a new menu item will be displayed. When the button is released, the displayed item will be selected. Once all items in the menu have been displayed, the menu resumes from the beginning until the button is released.

Error Code Recall Mode

Select ”E” from the menu to access the most recent 10 error codes. Select “c” from the Error Code Recall menu to clear all error codes. Button must be pressed a second time while “c” is flashing to confirm command to delete codes. Press the button until a solid “≡” is displayed to exit the Error Code Recall mode.

Flame Signal Mode

Select ”F” from the menu to access the flame signal mode. The integrated control will display the flame current on 7 segment LED in in micro amps (uA).

- Flame signal mode is exited after the following:
- Power is reset
- Pressing and holding push button until 3 horizontal
- Lines “≡” are displayed
- 10 minutes of entering the flame sense mode.

Table 5.

DIAGNOSTIC CODES / STATUS OF FURNACE	CODE
Idle Mode (Decimal blinks at 1 Hertz -- 0.5 Seconds ON, 0.5 Seconds OFF	.
Indoor Blower Operation: Continuous Fan Mode (Constant Torque Only)	A
Indoor Blower Operation: Followed by CFM Setting for Indoor Blower (1 Second ON, 0.5 Second OFF) / CFM Setting for Mode Displayed (Variable Speed Only)	
Cooling Stage (1 Second ON, 0.5 Second OFF) 1 or 2 Displayed / Pause / Repeat Codes. Variable Speed Only	C
Gas Heat (1 Second ON, 0.5 Second OFF) Pause / CFM Displayed / Pause / Repeat Codes Blinking - Ignition	H
Heat Pump Stage (1 Second ON, 0.5 Second OFF) 1 or 2 Displayed / Pause / CFM Setting Displayed / Pause / Repeat Codes	h
Defrost Mode	dF
ERROR/FAULT CONDITION	**CODE**
No Error in the Memory	E000
ELECTRICAL FAULTS (WAIT FOR RECOVERY)	
AC Line Voltage Low	E110
Line Voltage Polarity Reversed	E111
Earth Ground Not Detected	E112
AC Line Voltage High	E113
Line Voltage Frequency Out Of Range	E114
Low 24V - Control Will Restart if the Error Recovers	E115
HARDWARE FAULT (5 MINUTES LOCKOUT)	
Control Hardware (Include A/D Electronics and Flame Test) Failure	E125
HARD LOCKOUT FAULT	
Rollout Open or Previously Opened	E200
GAS VALVE/PRESSURE SWITCH/LIMT FAULTS (wait for recovery)	
Gas Valve Relay (1st or 2nd Stage) Problem	E204
Gas Valve 2nd Stage B Relay Problem	E206
Low Pressure SW Failed to Close (Stuck Open)	E223
Low Pressure SW Failed to Open (Stuck Closed)	E224
High Pressure SW Failed to Close (Stuck Open)	E225
High Pressure SW Failed to Open (Stuck Closed)	E226
Low Pressure Switch Opened in RUN or TFI	E227
Flame Sense Out of Sequence-Still Present	E241
Primary Limit Switch Opened	E250
RSBUS COMMUNICATION CODES	
Device Communiation Problem - No Other Devices on Bus	E105
Unresponsive Device	E120
Active Subnet Controller Missing for More than 3 Minutes	E124
OUTDOOR UNITS CODES	
Relay Y1 Stuck	E344
Relay O Failure	E345
Outdoor Air Temperature Sensor Failure	E180
Relay Y1 Failure - Relay Energized but No Input Sensed	E347
Relay Y2 Failure - Relay Energized but No Input Sensed	E348
Interlock Switch (DS Terminal) Sensed Open (Communicating Mode Only)	E370

Table 5. (Cont.)

ERROR/FAULT CONDITION (Cont.)	CODE
SOFT LOCKOUT FAULTS (60 MINUTES)	
Unable to Communicate with Circular Motor	E201
Gas Valve Relay (1st or 2nd Stage) Contact Shorted	E205
Hot Surface Ignitor (HSI) Sensed Open	E207
Soft Lockout-Flame Failure on Ignition, Ignition Retry>Max, Last Failed Retry Due to Flame Failure	E270
Soft Lockout-Pressure Switch Open, Ignition Retry>Max, Last Failed Retry Due to LPSW Open	E271
Soft Lockout-Pressure Switch Open, in Run Mode Heating Recycles>Max, Last Failed Retry Due to LPSW Open	E272
Soft Lockout-Flame Failure in Run Mode,Heating Recycles>Max, Last Failed Retry Due to Loss of Flame	E273
Soft Lockout-Limit Open > 3 Minutes	E274
Soft Lockout-Flame Out of Sequence and is Gone	E275
Ignitor Circuit Fault-Failed Ignitor or Triggering Circuitry.	E290
Indoor Blower Unable to Start	E292
PERFORMANCE WARNING	
Poor Ground Detected	E117
Ignition on High Fire	E229
Low Flame Current in Heating Mode	E240
Non-Volatile Data Corruption	E131
Low Flame Current in Heating Mode	E240
Discharge Temperature Too High	E252
Indoor Blower Motor Temperature Too High	E295
Discharge Air Sensor Failure - No Error if Just Disconnected, Only Show if Shorted or Out of Range	E310
Restricted Airflow Heating, Heat Firing Rate Reduced to Match Cfm	E311
Restricted Airflow Cooling or Continuous Fan Mode - Information Only	E312
Indoor Outdoor Unit Capacity Mismatch	E313
LOW GWP REFRIGERANT FAULTS	
Refrigerant Leak Detected, Thermostat Lockout	E150
Refrigerant Leak Detector Sensor #1 Fault	E151
Refrigerant Leak Detector Sensor #2 Fault	E152
Refrigerant Leak Detector Sensor #1 Comm. Lost	E154
Refrigerant Leak Detector Sensor #2 Comm. Lost	E155
Refrigerant Leak Detector Sensor #1 Type Incorrect	E160
Refrigerant Leak Detector Sensor #2 Type Incorrect	E161
Refrigerant Leak Detector Control Failure	E163
Low GWP Test	E164
Low GWP Relay Stuck	E390

Table 5. (Cont.)

Code	Diagnostic Codes/Status of Equipment	Action Required to Clear and Recover
.	Idle mode (Decimal blinks at 1 Hertz -- 0.5 second ON, 0.5 second OFF).	
A	Cubic feet per minute (cfm) setting for indoor blower (1 second ON, 0.5 second OFF) / cfm setting for current mode displayed.	
C	Cooling stage (1 second ON, 0.5 second OFF) / 1 or 2 displayed / Pause / cfm setting displayed / Pause / Repeat codes).	
d	Dehumidification mode (1 second ON) / 1 second OFF) / cfm setting displayed / Pause / Repeat Codes).	
h	Heat pump stage (1 second ON, 0.5 second OFF) / % of input rate displayed / Pause / cfm setting / Pause / Repeat codes.	
H	Gas Heat Stage (1 second ON, 0.5 second OFF) / 1 or 2 displayed / Pause / cfm setting displayed / Pause / Repeat codes. Blinking during ignition.	
dF	Defrost mode.	
U	Discharge Air Temperature	
E000	No error in memory	
E105	Device communication problem - No other devices on RS BUS (Communication system).	Equipment is unable to communicate. Indicates numerous message errors. In most cases errors are related to electrical noise. Make sure high voltage power is separated from RSBus. Check for miswired and/or loose connections between the stat, indoor unit and outdoor unit. Check for a high voltage source of noise close to the system. Fault clears after communication is restored.
E110	Low line voltage.	Line Voltage Low (Voltage lower than nameplate rating). Check power line voltage and correct. Alarm clears 5 seconds after fault recovered.
E111	Low line voltage.	Reverse line power voltage wiring. System resumes normal operation 5 seconds after fault recovered.
E112	Ground not detected	System shuts down. Provide proper earth ground. System resumes normal operation 5 seconds after fault recovered.
E113	High line voltage.	Line Voltage High (Voltage higher than nameplate rating). Provide power voltage within proper range. System resumes normal operation 5 seconds after fault recovered.
E114	Line voltage frequency out-of-range.	No 60 Hertz Power. Check voltage and line power frequency. Correct voltage and frequency problems. System resumes normal operation 5 seconds after fault recovered.
E115	Low 24V - Control will restart if the error recovers.	24-Volt Power Low (Range is 18 to 30 volts). Check and correct voltage. Check for additional power-robbing equipment connected to system. May require installation of larger VA transformer to be installed in furnace / air handler. Clears after fault recovered.
E117	Poor ground detected (Warning only)	Provide proper grounding for unit. Check for proper earth ground to the system. Warning only will clear 30 seconds after fault recovered.
E120	Unresponsive device. Communication only.	Usually caused by delay in outdoor unit responding to indoor unit poling. Recycle power. Check all wiring connections. Cleared after unresponsive device responds to any inquiry

Table 5. (Cont.)

Code	Diagnostic Codes/Status of Equipment	Action Required to Clear and Recover
E124	Active communicating thermostat signal missing for more than 3 minutes.	Equipment lost communication with the thermostat. Check four wiring connections, ohm wires and cycle power at the thermostat. Alert stops all services and waits for heartbeat message from thermostat (subnet controller). Cleared after valid thermostat (subnet controller) message is received.
E125	Control failed self-check, internal error, failed hardware. Will restart if error recovers. Integrated control not communicating. Covers hardware errors (flame sense circuit faults, pin shorts, etc.).	Hardware problem on the control. Cycle power on control. Replace if problem prevents service and is persistent. Critical alert. Cleared 300 seconds after fault recovered.
E131	Corrupted control parameters (Verify configuration of system). Communicating only.	Reconfigure the system. Replace control if heating or cooling is not available. Only applicable in the communicating mode, not in startup. Exit from Commissioning and Execute ‘Set Factory Default mode Control will still operate on default parameter settings.
E150	A2L Refrigerant leak alarm	This may indicate the presence of a leak at or in the indoor unit coil of the equipment, that will need to be repaired for proper and safe operation. Additionally, it may indicate that proper refrigerant charge will need to be verified. The fault cannot be cleared while the refrigerant detection system sensor is reporting the presence of a leak.
E151	Refrigerant Leak Detector Sensor #1 fault	The refrigerant detection sensor #1 in the unit is reporting an issue that prevents it from functioning properly and replacement of the sensor may be necessary. This fault clears when the sensor no longer reports the presence of a fault condition
E152	Refrigerant Leak Detector #2 Fault	The refrigerant detection sensor #1 in the unit is reporting an issue that prevents it from functioning properly and replacement of the sensor may be necessary. This fault clears when the sensor no longer reports the presence of a fault condition
E154	Refrigerant Leak Detector #1 Communication lost or invalid sensor dip switch configuration (ON/OFF)	There may be an issue with the wiring harness connecting the sensor #1 to the furnace control board, either with the wiring itself or with the connector. Check the wiring and connector for damage or improper connectivity. Check the sensor for damage or obstruction on the harness plug. This fault clears when communications with the senor has been reestablished, but blower latches for a minimum 5 minutes. Retest of the presence of fault can be effected by pressing the LOW GWP test button on the furnace unit control board. This may also indicate incorrect LOW GWP dip switch settings. See installation instructions
E155	Refrigerant Leak Detector #2 Communication lost	There may be an issue with the wiring harness connecting the sensor #1 to the furnace control board, either with the wiring itself or with the connector. Check the wiring and connector for damage or improper connectivity. Check the sensor for damage or obstruction on the harness plug. This fault clears when communications with the senor has been reestablished, but blower latches for a minimum 5 minutes. Retest of the presence of fault can be effected by pressing the LOW GWP test button on the furnace unit control board.
E160	Refrigerant Leak Detector Sensor #1 type incorrect	The sensor #1 is of a type not suitable for use in the application. Replace the sensor with a GE Appliances approved replacement part. This fault clears when a sensor suitable for the application is detected by the furnace control board, but blower will latch for a minimum of 5 minutes. Retest of the presence of the fault can be effected by pressing the LOW GWP test button on the furnace unit control board

Table 5. (Cont.)

Code	Diagnostic Codes/Status of Equipment	Action Required to Clear and Recover
E161	Refrigerant Leak Detector Sensor #2 type incorrect	The sensor #2 is of a type not suitable for use in the application. Replace the sensor with a GE Appliances approved replacement part. This fault clears when a sensor suitable for the application is detected by the furnace control board, but blower will latch for a minimum of 5 minutes. Retest of the presence of the fault can be effected by pressing the LOW GWP test button on the furnace unit control board
E163	Furnace Control Board Failure	There is an issue with the furnace control board, preventing the furnace from operating properly. This may require the replacement of the indoor unit control board. This fault clears when the furnace controller operates normally.
E164	Low GWP Test	Low GWP Test mode activates by manually engaging Low GWP test button. Normal operations resumes and codes clear automatically after 1-minute
E180	Outdoor air temperature sensor failure. Only shown if shorted or out-of range.	Compare outdoor sensor resistance to temperature/ resistance charts in unit installation instructions. Replace sensor pack if necessary. At beginning of (any) configuration, furnace or air handler control will sense outdoor air and discharge air temperature sensor(s). If detected (reading in range), appropriate feature will be set as ‘installed’ and that could be seen in ‘About’ screen. In normal operation after control recognizes sensors, alarm will be sent if valid temperature reading is lost. To get rid of setting and alarm, redo configuration and make sure that temperature sensor is marked as ‘not installed’ in Indoor Unit ‘About’ screen. When Indoor unit control is replaced, thermostat will ‘tell’ new control if temperature sensor is in system or not. Clears 30 seconds after fault recovered.
E200	Hard lockout - Rollout circuit open or previously open.	Correct cause of rollout trip, or replace flame rollout switch. Test furnace operation. Cleared after fault recovered.
E201	Indoor blower communication failure - Unable to communicate with blower motor.	Indoor blower communication failure (including power outage). Lost communication with indoor blower motor. Possible causes: motor not powered, loose wiring. Problem may be on control or motor side. Cleared after fault recovered.
E202	Indoor blower motor mis-match - Indoor motor horsepower does not match unit capacity.	Incorrect appliance capacity code selected. Check for proper configuring under: Unit Size Codes for Furnace/Air Handler on configuration guide or in installation instructions. Cleared after the correct match is detected following a reset. (Remove thermostat from system while applying power and reprogramming.)
E203	Appliance capacity / size is NOT programmed. Invalid unit codes refer to configuration flow chart.	No appliance capacity code selected. Check for proper configuring under: Unit Size Codes for Furnace on configuration guide or in installation instructions. Critical Alert. Cleared after valid unit code is read following a reset. (Remove thermostat from system while applying power and reprogramming.)
E204	Gas valve mis-wired.	Check gas valve operation and wiring. Clears when repaired.
E205	Gas valve control relay contact shorted.	Check wiring on control and gas valve. If wiring is correct, replace control.

Table 5. (Cont.)

Code	Diagnostic Codes/Status of Equipment	Action Required to Clear and Recover
E206	Gas valve second-stage relay failure	Furnace will operate on 1st stage for remainder of the heating demand. Will clear after fault recovered. If unable to operate 2nd stage, replace control.
E207	Hot surface ignitor sensed open.	Measure resistance of hot surface ignitor. Replace if open or not within specified range found in IOM. Resumes normal operation after fault is cleared.
E223	Low pressure switch failed open.	Check pressure (inches w.c.) of low pressure switch closing on heat call. Measure operating pressure (inches w.c.). Inspect vent and combustion air inducer for correct operation and restriction. Resumes normal operation after fault is cleared.
E224	Low pressure switch failed closed.	Check operation of low pressure switch to see if it is stuck closed on heat call longer than 150 seconds. Measure operating pressure (inches w.c.). Inspect vent and combustion air inducer for correct operation and restriction. Resumes normal operation after fault is cleared.
E225	High pressure switch failed open.	Check pressure (inches w.c.) of high pressure switch closing on heat call. Measure operating pressure (inches w.c.). Inspect vent and combustion air inducer for correct operation and restriction. Resumes normal operation after fault is cleared.
E226	High pressure switch failed closed	Check operation of high pressure switch closing on heat call. Measure operating pressure (inches w.c.). Inspect vent and combustion air inducer for correct operation and restriction. Resumes normal operation after fault is cleared.
E227	Low pressure switch open during trial for ignition or run mode.	Check pressure (inches w.c.) of low pressure switch closing on heat call. Measure operating pressure (inches w.c.). Inspect vent and combustion air inducer for correct operation and restriction. Resumes normal operation after fault is cleared.
E228	Combustion air inducer calibration failure	Unable to perform pressure switch calibration. Check vent system and pressure switch wiring connections. Resumes normal operation after fault is cleared.
E229	Ignition on high fire	IFC switched to high fire ignition because low fire pressure switch did not close in allowed time. No action is needed.
E240	Low flame current - Run mode.	Check micro-amperes of flame sensor using control diagnostics or field-installed mode. Clean or replace sensor. Measure voltage of neutral to ground to ensure good unit ground. Alert clears after current heat call has been completed.
E241	Flame sensed out of sequence - Flame still present.	Shut off gas. Check for gas valve leak. Replace, if necessary. Alert clears when fault is recovered.
E250	Limit switch circuit open.	Check for proper firing rate on furnace. Ensure there is no blockage in heater. Check for proper air flow. If limit not closed within 3 minutes, unit will go into 1-hour soft lockout. Resumes normal operation after fault is cleared.
E252	Discharge air temperature too high (gas heat only).	Check temperature rise, air flow and input rate. Cleared when heat call is finished.
E270	Soft lockout - Exceeded maximum number of retries. No flame current sensed.	Check for proper gas flow. Ensure that ignitor is lighting burner. Check flame sensor current. Clears when heat call finishes successfully.
E271	Soft lockout - Exceeded maximum number of retries. Last retry failed due to the pressure switch opening.	Check pressure (inches w.c.) of low pressure switch closing on heat call. Measure operating pressure (inches w.c.). Inspect vent and combustion air inducer for correct operation and restriction. Clears when heat call finishes successfully.
E272	Soft lockout - Exceeded maximum number of recycles. Last recycle due to the pressure switch opening.	Check operation of low pressure switch to see if it is stuck closed on heat call. Check pressure (inches w.c.) of high pressure switch closing on heat call. Measure operating pressure (inches w.c.). Inspect vent and combustion air inducer for correct operation and restriction. Clears when heat call finishes successfully.

Table 5. (Cont.)

Code	Diagnostic Codes/Status of Equipment	Action Required to Clear and Recover
E273	Soft lockout - Exceeded maximum number of recycles. Last recycle due to flame failure.	Check micro-amperes of flame sensor using control diagnostics or field-installed mode. Clean or replace sensor. Measure voltage of neutral to ground to ensure good unit ground. Clears when heat call finishes successfully.
E274	Soft lockout - Exceeded maximum number of recycles. Last recycle failed due to the limit circuit opening or limit remained open longer than 3 minutes	Shut down system. 1-hour soft lockout. Check firing rate and air flow. Check for blockage. Clears when heat call finishes successfully.
E275	Soft lockout - Flame sensed out of sequence. Flame signal is gone.	Shut off gas. Check for gas valve leak. 1-hour soft lockout. Clears when flame has been proven stable.
E290	Ignitor circuit fault - Failed ignitor or triggering circuitry.	Measure resistance of hot surface ignitor. Replace if open or not within specifications. 1-hour soft lockout. Clears when flame has been proven stable.
E292	Indoor blower motor unable to start due to obstructed wheel, seized bearings.	Indoor blower motor unable to start (seized bearing, stuck wheel, etc.). Replace motor or wheel if assembly does not operate or meet performance standards. 1-hour soft lockout. Clears after circulator successfully starts.
E295	Indoor blower motor temperature is too high.	Indoor blower motor over temperature (motor tripped on internal protector). Check motor bearings and amps. Replace if necessary. Cleared after blower demand is satisfied.
E310	Discharge error temperature sensor failure. Only shown if shorted or out of range.	Compare outdoor sensor resistance to temperature/ resistance charts in installation instructions. Replace sensor if necessary. Cleared in Communicating mode: 30 seconds after fault recovered. In Non- Communicating mode: Cleared after the current heat call is completed.
E311	Heat rate reduced to match indoor blower air flow.	Warning Only. Furnace blower in cutback mode due to restricted airflow. Reduce firing rate every 60 seconds to match available CFM. Check filter and duct system. To clear, replace filter if needed or repair/ add duct. 2-stage controls will reduce firing rate to 1st stage. Clears when heat call finishes successfully
E312	Restricted air flow in cooling or continuous fan mode is lower than cfm setting.	Warning Only. Restricted airflow - Indoor blower is running at a reduced CFM (Cutback Mode - The variable speed motor has pre-set speed and torque limiters to protect the motor from damage caused by operating outside of design parameters (0 to 0.8” W.C.. total external static pressure). Check filter and duct system. To clear, replace filter if needed or repair/add duct. Cleared after the current service demand is satisfied.
E313	Indoor or outdoor unit capacity mismatch. Communication only.	Incorrect indoor/outdoor capacity code selected. Check for proper configuring in installation instructions. Alarm is just a warning. The system will operate, but might not meet efficiency and capacity parameters. Alarm will clear when commissioning is exited. Cleared after commissioning is complete.
E334	Relay “Y1” stuck on interated control.	Replace integrated control.
E345	Relay O Failure	
E347	No 24 Volt output on Y1 of ”integrated control” with non communicating outdoor unit.	Operation stopped. Y1 relay / Stage 1 failed. (Pilot relay contacts did not close or the relay coil did not energize; no input back to IFC chip). Critical Alert. Cleared after reset and Y1 input sensed.
E348	No 24 Volt output on Y2 of ”integrated control” with non communicating outdoor unit.	Y2 relay / Stage 2 failed. (Pilot relay contacts did not close or the relay coil did not energize; no input back to IFC chip). Critical Alert. Cleared after reset and Y1 input sensed.
E370	Interlock switch sensed open for 2 minutes.	Control sees the loss of 24VAC for 2 minutes.Terminate all services and wait for interlock switch to close. The alarm will clear when 24VAC is continuously sensed on DS terminal for a minimum of 10 seconds or on a power reset.
E390	LOW GWP Relay Stuck	This indicates an issue with the LOW GWP relay in the furnace control. This may require the replacement of the indoor control board. This fault clears when the relay operates normally.

IGNITION CONTROL DIP SWITCH SETTINGS

Conventional Thermostat (non-communicating)

Units are equipped with a two-stage, variable speed integrated control. This control manages ignition timing, heating mode fan off delays and indoor blower speeds based on selections made using the control dip switches and jumpers. See **Figure 5**. The control includes an internal watchguard feature which automatically resets the ignition control when it has been locked out. After one hour of continuous thermostat demand for heat, the watchguard will break and remake thermostat demand to the furnace and automatically reset the control to relight the furnace.

NOTE: All icomfort settings are set at the icomfort Touch® thermostat. See icomfort installation instruction. In icomfort communication system all DIP switch and clippable link settings are ignored. For conventional thermostats proceed with DIP switch and clippable link settings as outlined in the following.

Heating Operation DIP Switch Settings

Switch 1 -- Thermostat Selection -- This unit may be used with either a single-stage or two-stage thermostat. The thermostat selection is made using a DIP switch which must be properly positioned for the particular application. The DIP switch is factory-positioned for use with a two stage thermostat. If a single-stage thermostat is to be used, the DIP switch must be repositioned.

a. Select “OFF” for two-stage heating operation controlled by a two-stage heating thermostat (factory setting);

b. Select “ON” for two-stage heating operation controlled by a single-stage heating thermostat. This setting provides a timed delay before second-stage heat is initiated.

Switch 2 -- Second Stage Delay (Used with Single-Stage Thermostat Only) -- This switch is used to determine the second stage on delay when a single-stage thermostat is being used. The switch is factory-set in the OFF position, which provides a 7-minute delay before second stage heat is initiated. If the switch is toggled to the ON position, it will provide a 12-minute delay before second stage heat is initiated. This switch is only activated when the thermostat selector jumper is positioned for SINGLE stage thermostat use.

Switches 3 and 4 -- Blower-Off Delay -- The blower-on delay of 30 seconds is not adjustable. The blower-off delay (time that the blower operates after the heating demand has been satisfied) can be adjusted by moving switches 3 and 4 on the integrated control. The unit is shipped from the factory with a blower-off delay of 90 seconds. The blower off delay affects comfort and is adjustable to satisfy individual applications. Adjust the blower off delay to achieve a supply air temperature between 90° and 110°F at the exact moment that the blower is de-energized. Longer off delay settings provide lower supply air temperatures; shorter settings provide higher supply air temperatures. **Table 6** provides the blower off timings that will result from different switch settings.

Table 6. Blower Off Delay Switch Setting

Blower Off Delay (Seconds)	Switch 3	Switch 4
60	On	Off
90 (factory)	Off	Off
120	Off	Off
180	On	Off

Indoor Blower Operation DIP Switch Settings Switches 5 and 6 -- Cooling Mode Blower Speed -- The unit is shipped from the factory with the dip switches positioned for high speed (4) indoor blower motor operation during the cooling mode. **Table 7** provides the cooling mode blower speeds that will result from different switch settings. Switches 5 and 6 set the blower cfm for second stage cool. The integrated control automatically ramps down to 70% of the second-stage cfm for first-stage cfm. Refer to tables for corresponding cfm values.

Table 7. Cooling Mode Blower Speeds

Speed	Switch 5	Switch 6
Low	On	On
Medium Low	Off	On
Medium High	On	Off
High (Factory)	Off	Off

Switches 7 and 8 -- Cooling Blower Speed Adjustment The unit is shipped from the factory with the dip switches positioned for NORMAL (no) adjustment. The dip switches may be positioned to adjust the blower speed by +10% or -10% to better suit the application. **Table 8** below provides blower speed adjustments that will result from different switch settings. Refer to tables for corresponding cfm values.

Table 8. Cooling Blower Speed Adjustment

Adjustment	Switch 7	Switch 8
+10% (approx.)	On	Off
Factory Default	Off	Off
-10% (approx.)	Off	On

Switches 9 and 10 -- Cooling Mode Blower Speed Ramping -- Blower speed ramping may be used to enhance dehumidification performance. The switches are factory set at option A which has the greatest effect on dehumidification performance. **Table 9** provides the cooling mode blower speed ramping options that will result from different switch settings. The cooling mode blower speed ramping options are detailed on the next page.

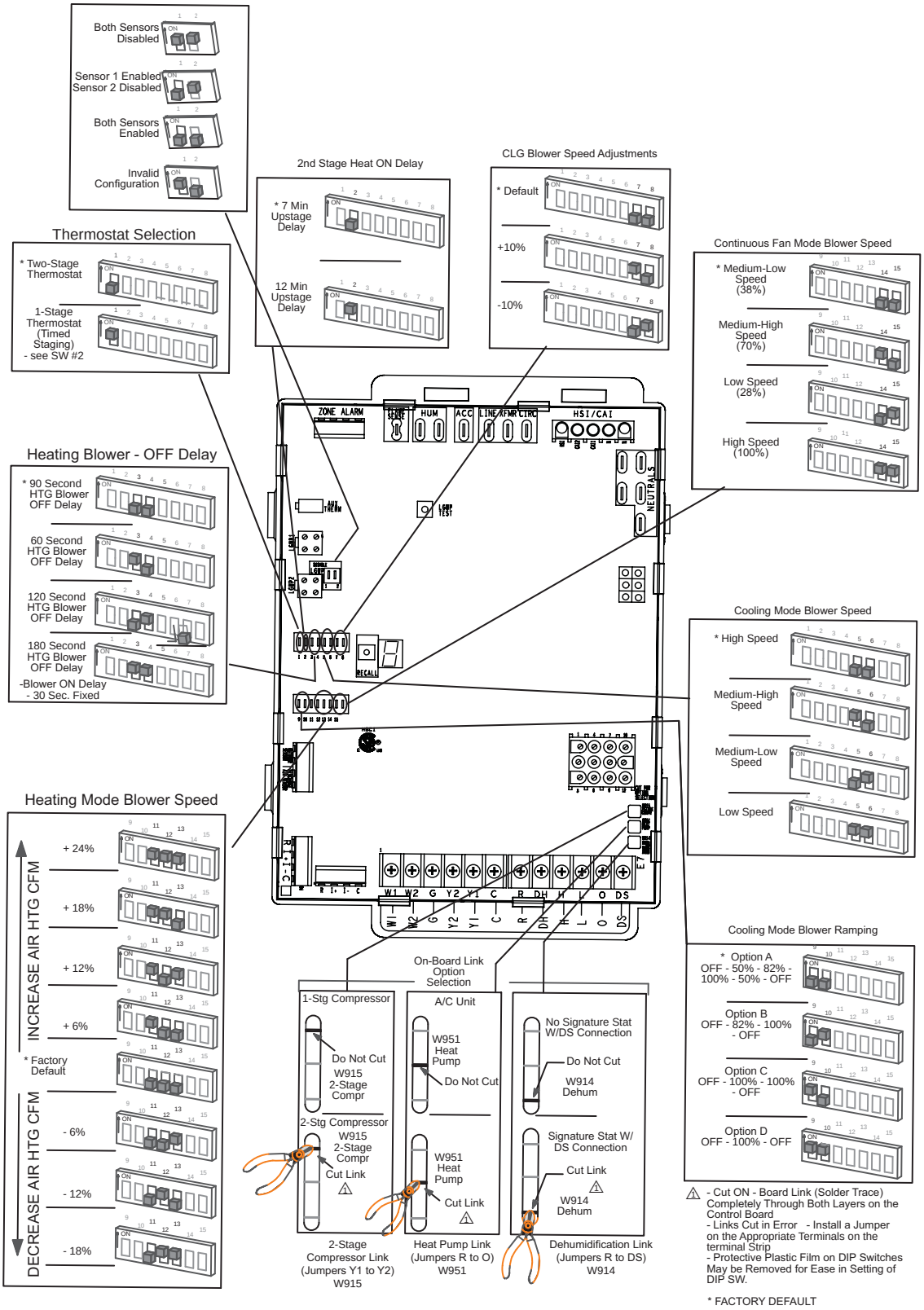

Figure 5. Integrated Control Configuration Guide

IGNITION CONTROL DIP SWITCH SETTINGS (Cont.)

NOTE - The off portion of the selected ramp profile also applies during heat pump operation in dual fuel applications.

Table 9. Cooling Mode Speed Ramping

Ramping Option	Switch 9	Switch 10
A (factory)	Off	Off
B	Off	On
C	On	Off
D	On	On

Ramping Option A (Factory Selection)

- Motor runs at 50% for 30 seconds.
- Motor then runs at 82% for approximately 7-1/2 minutes.
- If demand has not been satisfied after 7-1/2 minutes, motor runs at 100% until demand is satisfied.
- Once demand is met, motor runs at 50% for 30 seconds then ramps down to stop.

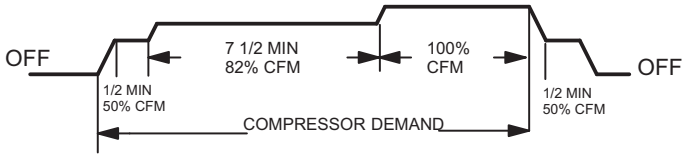

Ramping Option B

- Motor runs at 82% for approximately 7-1/2 minutes. If demand has not been satisfied after 7-1/2 minutes, motor runs at 100% until demand is satisfied.
- Once demand is met, motor ramps down to stop.

Ramping Option C

- Motor runs at 100% until demand is satisfied.

Once demand is met, motor runs at 100% for 45 seconds then ramps down to stop.

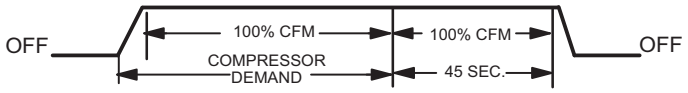

Ramping Option D

- Motor runs at 100% until demand is satisfied.
- Once demand is met, motor ramps down to stop.

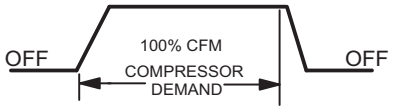

Switches 11, 12 and 13 -- Heating Mode Blower Speed -- The switches are factory set to the OFF position which provides normal heat speed. Refer to **Table 10** for switches 11, 12 and 13 that provided the corresponding increases or decrease to both high and low heat demand.

Table 10. Heating Mode Blower Speeds

Heat Speed	Switch 11	Switch 12	Switch 13
Increase 24%	On	On	On
Increase 18%	On	On	Off
Increase 12%	On	Off	On
Increae 6%	On	Off	Off
Factory Default	Off	Off	Off
Decrease 6%	Off	Off	On
Decrease 12%	Off	On	Off
Decrease 18%	Off	On	On

Switches 14 and 15 -- Continuous Blower Speed -- Table 11 provides continuous blower speed adjustments that will result from different switch settings.

Table 11. Continuous Blower Speed

Coninuous Blower Speed	Switch 14	Switch 15
28% of High Cool Speed	Off	On
38% of High Cool Speed (Factory)	Off	Off
70% of High Cool Speed	On	Off
100% of High Cool Speed	On	On

See **Table 13** for allowable circulation speeds.
Unnumbered switch not used.

Table 12. Allowable Heating Speeds

Model	-18%	-12%	-6%	Default	+6%	+12%	+18%	+24%
NF80X060V3AR	Allowed	Allowed	Allowed	Factory Setting	Allowed	Allowed	Allowed	Allowed
NF80X080V4BR								
NF80X100V5CR								Not Allowed

Table 13. Allowable Circulation Speeds

Model Number	28% (second stage cool)	38% (second stage cool)
All Models	Allowed	Factory Setting

ON-BOARD LINKS

NOTE: In communicating systems with a conventional outdoor unit (non-communicating), the on-board clippable links must be set to properly configure the system.

⚠WARNING Carefully review all configuration information provided. Failure to properly set DIP switches, jumpers and on-board links can result in improper operation!

On-Board Link W914 Dehum (R to DS)

On-board link W914, is a clippable connection between terminals R and DS on the integrated control. W914 must be cut when the furnace is installed with a thermostat which features humidity control. Refer to **Table 14** for operation sequence in applications including a thermostat which features humidity control and a single-speed outdoor unit. **Table 15** gives the operation sequence in applications with a two-speed outdoor unit.

On-Board Link W951 Heat Pump (R to O)

On-board link W951 is a clippable connection between terminals R and O on the integrated control. W951 must be cut when the furnace is installed in applications which include a heat pump unit and a thermostat which features dual fuel use. If the link is left intact, terminal “O” will remain energized eliminating the HEAT MODE in the heat pump.

On-Board Link W915 2 Stage Compr (Y1 to Y2))

On-board link W915 is a clippable connection between terminals Y1 and Y2 on the integrated control. W915 must be cut if two-stage cooling will be used. If the Y1 to Y2 link is not cut the outdoor unit will operate in second-stage cooling only.

Table 14. Operating Sequence
NF80XV, Thermostat with Humidity Control Feature and Single-Speed Outdoor Unit

Operating Sequence		System Demand				System Response				
System Condition	Step	Thermostat Demand				Relative Humidity		Compressor	Blower CFM (cool)	Comments
		Y1	O	G	W1	Status	D			
NO CALL FOR DEHUMIDIFICATION										
Normal Operation	1	On	On	On		Acceptable	24 VAC	High	100%	Compressor and indoor blower follow thermostat demand
BASIC MODE (only active on a Y1 thermostat demand)										
Normal Operation	1	On	On	On		Acceptable	24 VAC	High	100%	Thermostat energizes Y1 and de-energizes D on a call for de-humidification
Dehumidification Call	2	On	On	On		Demand	0 VAC	High	70%*	
PRECISION MODE (operates independent of a Y1 demand)										
Normal Operation	1	On	On	On		Acceptable	24 VAC	High	100%	Dehumidification mode begins when humidity is greater than set point
Dehumidification Call	2	On	On	On		Demand	0 VAC	High	70%*	
Dehumidification Call Only	1	On	On	On		Demand	0 VAC	High	70%*	Thermostat will try to maintain room humidity setpoint by allowing the room space to maintain a cooler room thermostat setpoint**
	Jumpers at indoor unit with a single stage outdoor unit With Condensing unit - Cut W914 (R to DS) on control With Heat Pump - Cut W914 (R to DS) & W951 (R to O) on control									

**Dehumidification blower speed is 70% of COOL speed for all units.*

***In Precision mode, thermostat will maintain room temperature up to 2 °F (1.2°C) cooler than room setting.*

ON-BOARD LINKS (Cont.)

Table 15. Operating Sequence
NF80XV, Thermostat with Humidity Control Feature and Two-Speed Outdoor Unit

Operating Sequence		System Demand						System Response				
System Condition	Step	Thermostat Demand						Relative Humidity		Compressor	Blower CFM (cool)	Comments
		Y1	Y2	O	G	W1	W2	Status	D			
NO CALL FOR DEHUMIDIFICATION												
Normal Operation Y1	1	On		On	On			Acceptable	24 VAC	Low	70%*	Compressor and indoor blower follow thermostat demand
Normal Operation Y2	2	On	On	On	On			Acceptable	24 VAC	High	100%	
ROOM THERMOSTAT CALLS FOR FIRST STAGE COOLING												
BASIC MODE (only active on a Y1 thermostat demand)												
Normal Operation	1	On		On	On			Acceptable	24 VAC	Low	70%*	Thermostat energizes Y1 and de-energizes D on a call for de-humidification
Dehumidification call	2	On	On	On	On			Demand	0 VAC	High	70%**	
PRECISION MODE (operates independent of a Y1 demand)												
Normal Operation	1	On		On	On			Acceptable	24 VAC	Low	70%*	Dehumidification mode begins when humidity is greater than set point
Dehumidification Call	2	On	On	On	On			Demand	0 VAC	High	70%**	
Dehumidification Call Only	1	On	On	On	On			Demand	0 VAC	High	70%**	Thermostat will try to maintain room humidity setpoint by allowing the room space to maintain a cooler room thermostat setpoint**
ROOM THERMOSTAT CALLS FOR FIRST AND SECOND STAGE COOLING												
BASIC MODE (only active on a Y1 thermostat demand)												
Normal Operation	1	On	On	On	On			Acceptable	24 VAC	High	100%	Thermostat energizes Y2 and de-energizes D on a call for de-humidification
Dehumidification Call	2	On	On	On	On			Demand	0 VAC	High	70%**	
PRECISION MODE (operates independent of a Y1 thermostat demand)												
Normal Operation	1	On		On	On			Acceptable	24 VAC	Low	70%*	Dehumidification mode begins when humidity is greater than set point
Dehumidification Call	2	On	On	On	On			Demand	0 VAC	High	70%**	
Dehumidification Call ONLY	1	On	On	On	On			Demand	0 VAC	High	70%**	Thermostat will try to maintain room humidity setpoint by allowing the room space to maintain a cooler room thermostat setpoint***
	Jumpers at indoor unit with a two stage outdoor unit Cut factory jumper from Y1 to Y2 or cut W915 (Y1 to Y2) With Condensing unit - Cut W914 (R to DS) on control With Heat Pump - Cut W914 (R to DS) & W951 (R to O) on control											

**Normal operation first stage cooling blower speed is 70% COOL speed.*

***Dehumidification blower speed is, reduced to 70% of COOL.*

****In Precision mode, thermostat will maintain room temperature up to 2 °F (1.2°C) cooler than room setting.*

INDOOR BLOWER MOTOR

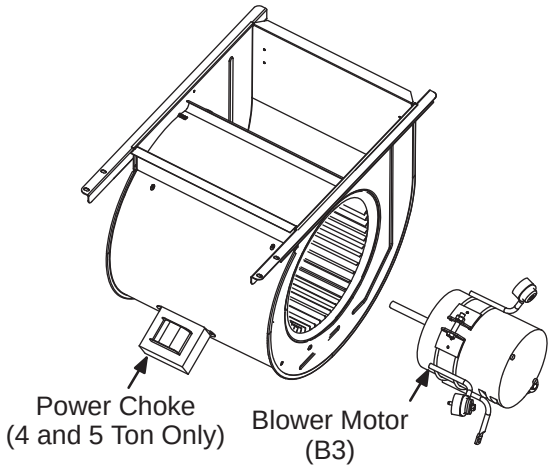

To remove blower from unit: remove access panels,control box, bolts and wiring jackplugs; then slide out front of unit.

Figure 6.

⚠WARNING During blower operation, the ECM motor emits energy that may interfere with pacemaker operation. Interference is reduced by both the sheet metal cabinet and distance.

Blower Drive

Some units will be equipped with a blower drive shown in **Figure 7** with LED codes for operation in **Table 16**. The blower drive is not repairable. If it fails replace the drive.

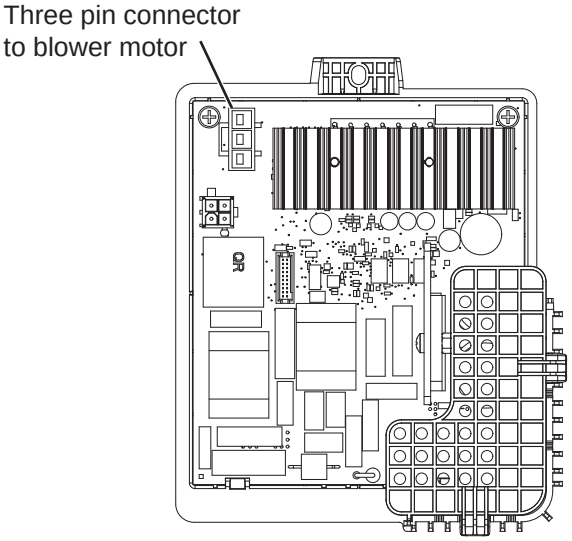

Figure 7. BLOWER DRIVE - Located in the control box

Table 16.

Led*	Meaning
1 short blink	Normal heartbeat
2 short blinks	Drive fault, replace drive
3 short blinks	
4 short blinks	
5 short blinks	
1 long blink + 1 short blink	Temporary fault (see troubleshooting page 41)
1 long blink + 2 short blinks	
1 long blink + 3 short blinks	

* Do not touch or remove drive for replacement until all blinking lights are off. Blinking light(s) indicates drive still has power.

The motor communicates with the integrated control via a 2-way serial connection. The motor receives all necessary functional parameters from the integrated control and does not rely on a factory program like traditional variable speed motors. Units use a three-phase, electronically controlled D.C. brushless motor (controller converts single phase a.c. to three phase D.C.), with a permanent-magnet-type rotor (**Figure 8**). Because this motor has a permanent magnet rotor it does not need brushes like conventional D.C. motors.

The stator windings are split into three poles which are electrically connected to the controller. This arrangement allows motor windings to turn on and off in sequence by the controller.

⚠IMPORTANT Earlier ECM motors used on other furnace models are not interchangeable with motors used on the NF80X***V**R furnace line.

A solid-state controller is permanently attached to the motor. The controller is primarily an A.C. to D.C. converter. Converted D.C. power is used to drive the motor. The controller contains a microprocessor which monitors varying conditions inside the motor (such as motor workload).

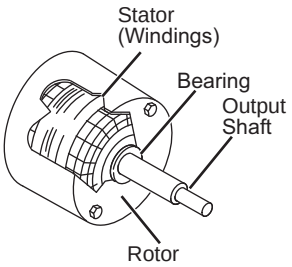

Figure 8.

The controller uses sensing devices to sense what position the rotor is in at any given time. By sensing the position of the rotor and then switching the motor windings on and off in sequence, the rotor shaft turns the blower.

INDOOR BLOWER MOTOR (Cont.)

All NF80X***V**R blower motors use single phase power. An external run capacitor is not used. The motor uses permanently lubricated ball-type bearings.

Blower motors use single phase power. An external run capacitor is not used. The motor uses permanently lubricated ball-type bearings.

Internal Operation

The motor is controlled via serial communication between the integrated control on the furnace and the controller attached to the motor shell. The messages sent back and forth between the two controls serve to communicate rotational direction, demand, motor size, current draw, torque, and rpm, among other variables.

Motor rpm is continually adjusted internally to maintain constant static pressure against the blower wheel. The controller monitors the static work load on the motor and motor amp-draw to determine the amount of rpm adjustment. Blower rpm may be adjusted any amount in order to maintain a constant cfm as shown in Blower Ratings Tables. The cfm remains relatively stable over a broad range of static pressure. Since the blower constantly adjusts rpm to maintain a specified cfm, motor rpm is not rated. Hence, the terms “cool speed”, “heat speed ” or “speed tap” in this manual, on the unit wiring diagram and on blower B3, refer to blower cfm regardless of motor rpm.

Initial Power Up

When line voltage is applied to B3, there will be a large inrush of power lasting less than 1/4 second. This inrush charges a bank of DC filter capacitors inside the controller. If the disconnect switch is bounced when the disconnect is closed, the disconnect contacts may become welded. Try not to bounce the disconnect switch when applying power to the unit.

Motor Start-Up

When B3 begins start-up, the motor gently vibrates back and forth for a moment. This is normal. During this time the electronic controller is determining the exact position of the rotor. Once the motor begins turning, the controller slowly eases the motor up to speed (this is called “soft-start”). The motor may take as long as 10-15 seconds to reach full speed. If the motor does not reach 200 rpm within 13 seconds, the motor shuts down. Then the motor will immediately attempt a restart. The shutdown feature provides protection in case of a frozen bearing or blocked blower wheel. The motor may attempt to start eight times. If the motor does not start after the eighth try, the controller locks out. Reset controller by momentarily turning off power to unit.

The DC filter capacitors inside the controller are connected electrically to the motor supply wires. The capacitors take approximately 5 minutes to discharge when the disconnect is opened. For this reason it is necessary to wait at least 5 minutes after turning off power to the unit before attempting to service motor.

⚠WARNING Disconnect power from unit and wait at least five minutes to allow capacitors to discharge before attempting to service motor. Failure to wait may cause personal injury or death.

Power Choke (L13)

A choke coil is used on NF80X***V**R 4 and 5 ton units equipped with 1 hp motors. The choke is located on the blower housing and is used to suppress transient current spikes.

Troubleshooting Motor Operation

See **Figure 9** and **Figure 10**.

To verify motor operation see steps below:

1. Remove J48 (5 pin power plug) from P48 on the motor.
2. With the power on at the furnace and door switch depressed, use a test meter to verify 120V between pins 4 and 5 on J48.
3. Reconnect J48 to P48 on the motor.
4. Remove J49 (4 pin low voltage connector) from P49 on the motor.
5. Using test jumpers, apply 24V to pins 3 and 4 on P49 on the motor.

   NOTE: Do not apply 24V to pins 2 and 4 on P49. Doing so will cause permanent damage to the motor.
6. Motor should run at 75%.
7. Test is complete. Remove jumpers and reconnect plugs.

Another option is to use the TECMate PRO motor tester with the 16 to 4 pin adaptor. The use of the TECMate PRO isolates the motor from the integrated control. Follow the instructions provided with the kit. If the motor runs do not replace.

INDOOR BLOWER MOTOR (Cont.)

BLOWER B3 HARNESS CONNECTORS

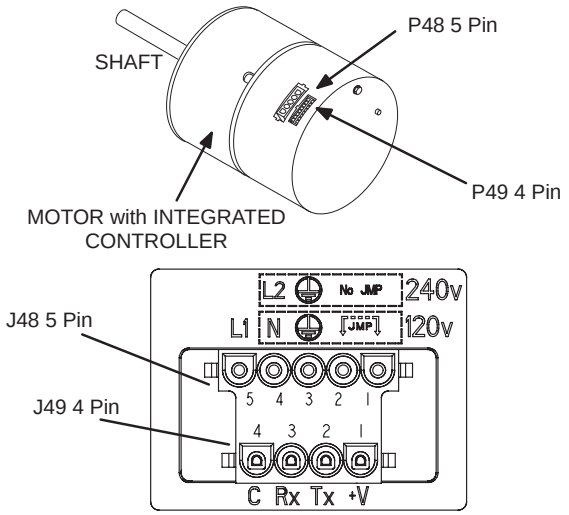

J49 4 Pin Control Connector	
PIN	DESCRIPTION
1	12V INPUT
2	SERIAL DATA OUTPUT
3	SERIAL DATA INPUT
4	COMMON

J48 5 Pin Line Voltage Connector	
PIN	DESCRIPTION
1	JUMPER PIN 1 TO PIN 2 FOR 120VAC LINE INPUT ONLY ***
2	
3	CHASSIS GROUND
4	AC LINE
5	AC LINE

Figure 9.

BLOWER B3 HARNESS CONNECTORS

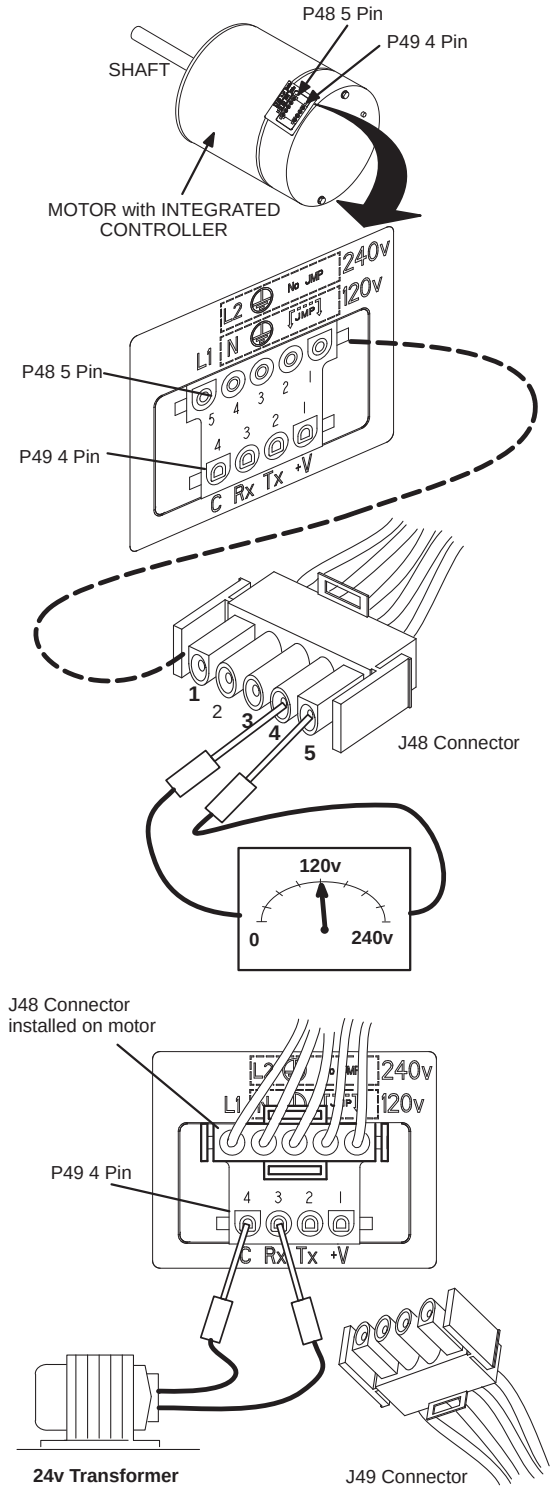

Figure 10.

INDOOR BLOWER MOTOR (Cont.)

Troubleshooting Motor Windings

Ensure that motor windings are not damaged by performing the following tests:

NOTE - If your ohm meter is not an auto-ranging type, set it to the highest ohm scale (100k ohms or greater) before performing tests.

Table 17. Ohm Meter Range

Scale	Measurement Range	
	In Words	ohms
2M	two megohm - two million ohms	0 - 2,000,000
200k	two hundred kilohm - two hundred thousand ohms	0 - 200,000
20k	twenty kilohm -- twenty thousand ohms	0-20,000
2k	two kilohm -- two thousand ohms	0 - 2,000
200	two hundred ohm	0 - 200

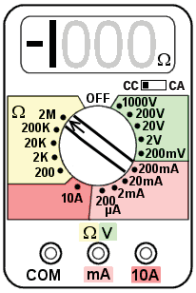

Figure 11.

TEST A

Measure the resistance between each of the three motor leads (3-pin plug) and the unpainted part of the end shield.

If the winding resistance to ground is <100k ohms, replace the motor and control module. If the resistance to ground is >100k, the motor windings are fine. Proceed to Test B.

Figure 12. Test A

TEST B

Use an ohmmeter to measure the motor phase-to-phase resistance by checking these combinations of the the 3-pin motor plug. For the purpose of this test, start at either end of the connector as lead 1.

1. The lead-to-lead resistance across any two leads should be less than 20 ohms.
2. Each lead-to-lead resistance should be the same.

If the measured resistance is greater than 20 ohms, replace the motor and control module.

Figure 13. Test B

HEATING COMPONENTS (Figure 14)

Ignitor

The ignitor is made of durable silicon nitride. Ignitor longevity is enhanced by controlling voltage to the ignitor. The integrated control provides a regulated 120 volts to the ignitor for a consistent ignition and long ignitor life. Ohm value should be 39 to 70. See **Figure 15** for ignitor check out.

NOTE - The furnace contains electronic components that are polarity sensitive. Make sure that the furnace is wired correctly and is properly grounded.

Flame Sensor

A flame sensor is located on the top of the air gas plenum. The sensor can be removed for service without removing the burner. During operation, flame is sensed by current passed through the flame and sensing electrode. The control allows the gas valve to remain open as long as flame signal is sensed. To check flame sense signal use the push-button found on the integrated control and go to Field Test Mode. The menu will display the flame signal. See **Table 18** for flame signal.

Table 18. Flame Signal in Microamps

Normal	Low	Drop Out
2.6 or greater	2.5 or less	1.1

Gas Valve

The valve is internally redundant to assure safety shut-off. If the gas valve must be replaced, the same type valve must be used.

24VAC terminals and gas control knob are located on the valve. A wire harness connects the terminals from the gas valve to the electronic ignition control. 24V applied to the terminals energizes the valve. Inlet and outlet pressure taps are located on the valve. A regulator adjustment screw is located on the valve.

Thermal Switch

The auto-reset switch is located on the front of the intake air elbow. The switch will safely shut the unit down if excessive temperatures are detected. When the switch senses excessive temperature, the circuit breaks and the ignition control immediately stops ignition and closes the gas valve.

Burner and Orifice

Burners are factory set and require no adjustment. Always operate the unit with air gas plenum in place. The burner has one orifice located between the gas valve and the air intake assembly. To check or replace the orifice remove the intake air screen, coupling and intake air elbow.Using a 5/8” socket, go through the elbow and unscrew the gas orifice. The burner uses an orifice (**Table 19**) that is precisely matched to the burner input. The burner can be removed for service. If burner has been removed, it is critical to replace all gaskets.

Table 19.

060	0.0787
080	0.0960
100	0.1110

Primary Limit Control (S10)

The primary limit (S10) is located in the heating vestibule panel. When excess heat is sensed in the heat exchanger, the limit will open. If the limit is open, the furnace control energizes the supply air blower and closes the gas valve. The limit automatically resets when unit temperature returns to normal. The switch must reset within three minutes or the control will go into Watch guard for one hour. The switch is factory set and cannot be adjusted. The switch may have a different set point for each unit model number.

HEATING COMPONENTS (Figure 14) (Cont.)

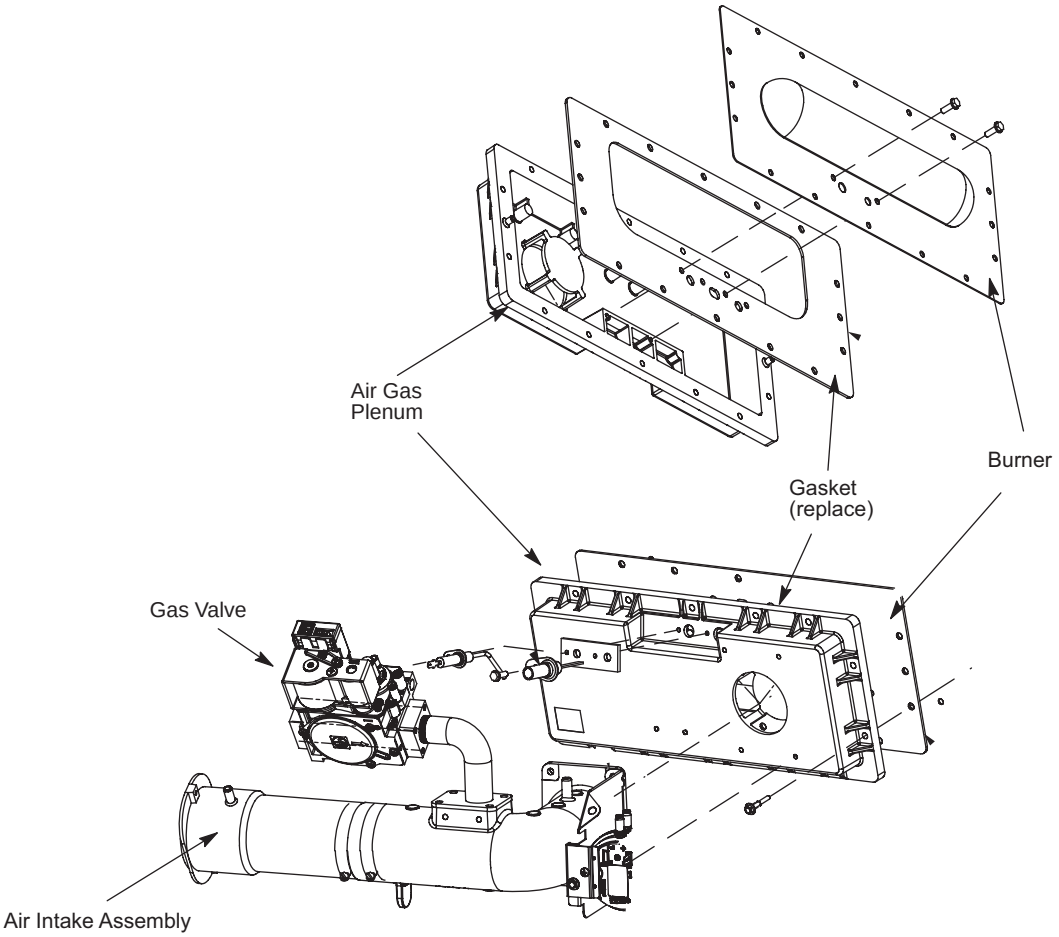

Figure 14. Heating Components

HEATING COMPONENTS (Figure 14) (Cont.)

Test 1

Remove HSI/CAI 5-pin plug from control. Check ohms reading across terminals 1 and 5Ohm value should be between 39 - 70.

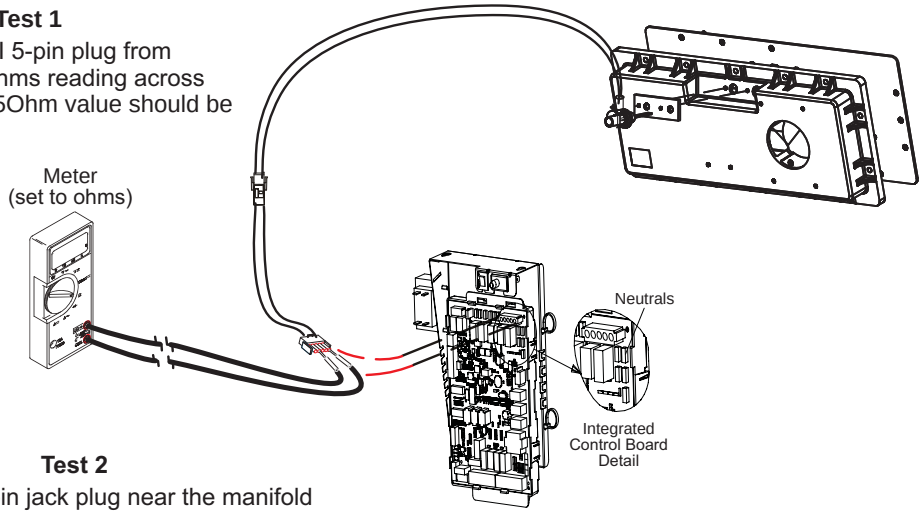

Test 2

Separate the 2-pin jack plug near the manifold and check resistance of the ignitor. If the reading is correct, then there is a problem with the wiring between the jack plug and control. If the reading is not correct the issue is the ignitor.

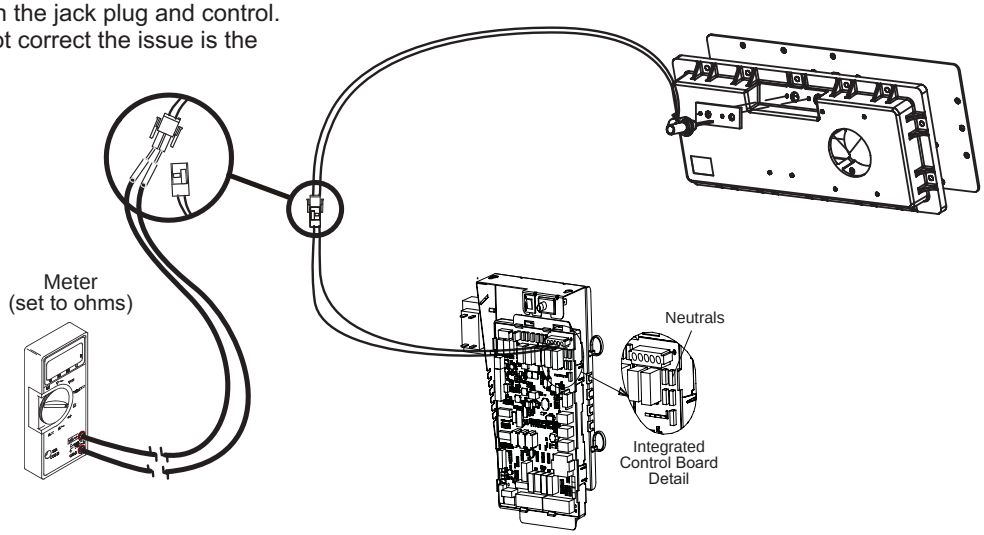

Test 3

Insert meter probes into the terminals 1 and 5. (Use small diameter probes in order to not damage plug). Check voltage during 20 second warm up period. Voltage should read 120 volts + 10%. If voltage is above these values,check for correct supply voltage to furnace.

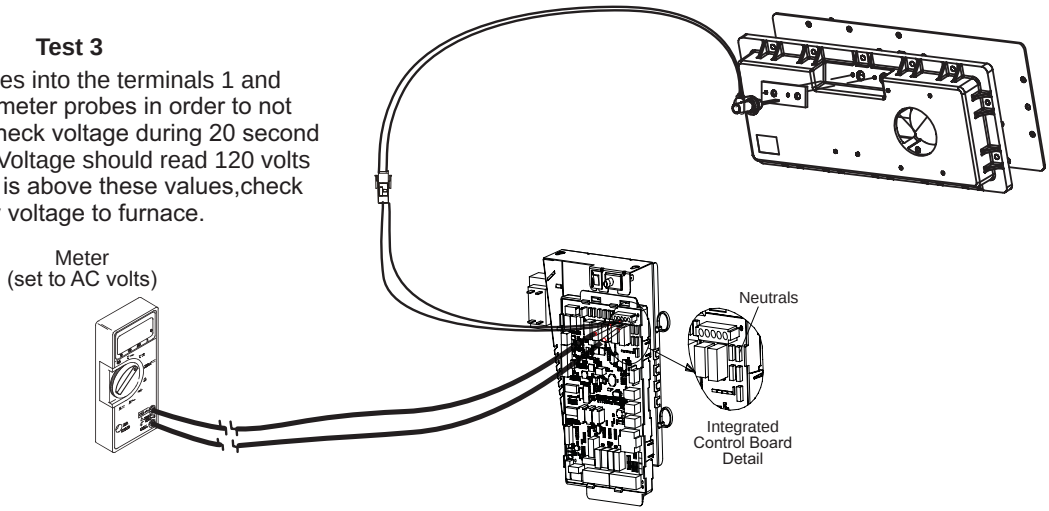

Figure 15. Ignitor Check Out (exploded view for clarity)

HEATING COMPONENTS (Cont.)

Combustion Air Inducer (B6)

All units use a two-stage combustion air inducer to move air through the burners and heat exchanger during heating operation. The blower uses a 120VAC motor. The motor operates during all heating operation and is controlled by integrated control A92. The inducer also operates for 15 seconds before burner ignition (prepurge) and for 5 seconds after the gas valve closes (postpurge). The inducer operates on low speed during first stage heat, then switches to high speed for second stage heat.

Combustion Air Inducer Prove Switch (S18)

NF80X***V**R series units are equipped with a single combustion air proving switch (first and second stage) located near the gas valve. See **Figure 16**. The switch is a single-pole single-throw proving switch electrically connected to the integrated control. The purpose of the switch is to prevent burner operation if the combustion air inducer is not operating or if the flue becomes obstructed.

On heat demand (first or second stage) the switch senses that the combustion air inducer is operating. It closes a circuit to the integrated control when pressure inside the combustion air inducer decreases to a certain set point. The set point is 0.20” for low heat and high heat and the same for all NF80X***V**R models.

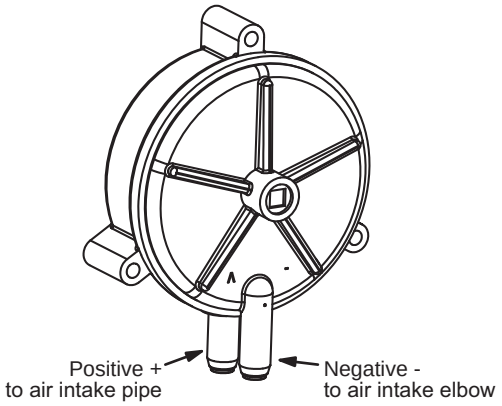

Figure 16. Combustion Air Pressure Switch

The pressure sensed by the switch is negative relative to atmospheric pressure. If the flue becomes obstructed during operation, the switch senses a loss of pressure difference and opens the circuit to the furnace control and gas valve. If replacing switch or switch tubing make note of all connections and see **Figure 17**.

NOTE - The switch is factory set and is not field adjustable. It is a safety shut-down control in the furnace and must not be by-passed for any reason. If switch is closed or bypassed, the control will not initiate ignition at start up.

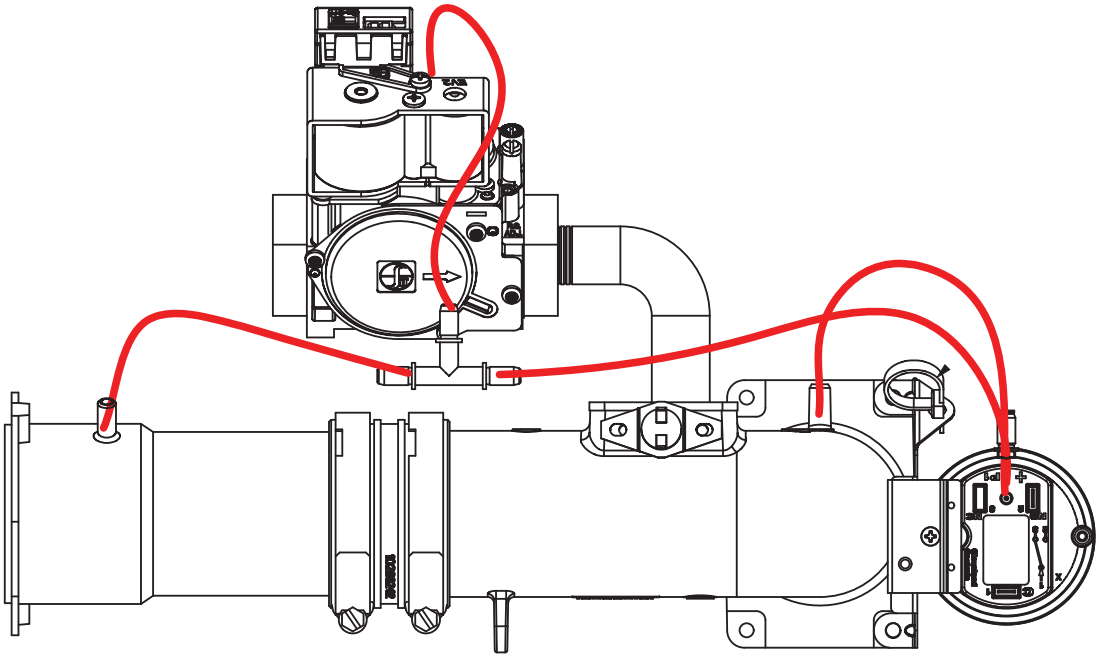

Figure 17. Replacing Pressure Switch or Tubing

Service Information

PLACEMENT AND INSTALLATION

Make sure unit is installed in accordance with installation instructions and applicable codes.

START-UP

Preliminary and Seasonal Checks

1. Inspect electrical wiring, both field and factory installed for loose connections. Tighten as required.
2. Check voltage at disconnect switch. Voltage must be within range listed on the nameplate. If not, consult the power company and have voltage condition corrected before starting unit.

Heating Start-Up

⚠WARNING Shock and burn hazard.

Units are equipped with a hot surface ignition system. Do not attempt to light manually.

1. **STOP!** Read the safety information at the beginning of this section.
2. Set the thermostat to the lowest setting.
3. Turn off all electrical power to the unit.
4. This furnace is equipped with an ignition device which automatically lights the burners. Do not try to light the burners by hand.
5. Remove the upper access panel.
6. Turn switch on gas valve to OFF. Do not force. See **Figure 18**.
7. Wait five minutes to clear out any gas. If you then smell gas, **STOP!** Immediately call your gas supplier from a neighbor's phone. Follow the gas supplier's instructions. If you do not smell gas go to next step.

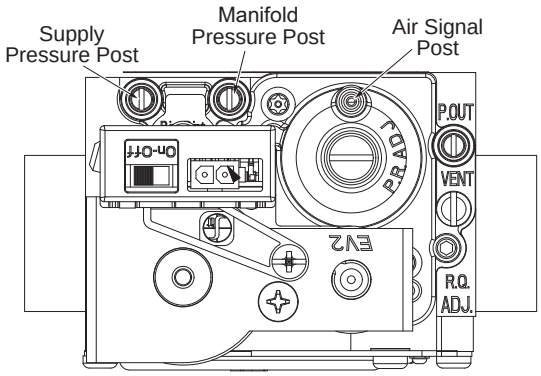

Gas Valve Shown in **OFF** Position.

Figure 18. SIT Valve

8. Move gas valve switch to ON position. Do not force. See **Figure 18**.
9. Replace the upper access panel.
10. Turn on all electrical power to to the unit.
11. Set the thermostat to desired setting.

NOTE: When unit is initially started, steps 1 through 11 may need to be repeated to purge air from gas line.

Turning Off Gas to Unit

1. Set the thermostat to the lowest setting.
2. Turn off all electrical power to the unit if service is to be performed.
3. Remove the upper access panel.
4. Move switch on valve to OFF. Do not force.
5. Replace the upper access panel.

Failure To Operate

If the unit fails to operate, check the following:

1. Is the thermostat calling for heat?
2. Are access panels securely in place?
3. Is the main disconnect switch closed?
4. Is there a blown fuse or tripped circuit breaker?
5. Is the filter dirty or plugged? Dirty or plugged filters will cause the limit control to shut the unit off.
6. Is gas turned on at the meter?
7. Is the manual main shut-off valve open?
8. Is the internal manual shut-off valve open?
9. Is the unit ignition system in lock out? If the unit locks out again, call the service technician to inspect the unit for blockages.
10. Is pressure switch closed? Obstructed flue will cause unit to shut off at pressure switch. Check flue and outlet for blockages.
11. Are flame rollout switches tripped? If flame rollout switches are tripped, call the service technician for inspection.

Safety or Emergency Shutdown

Turn off unit power. Close manual and main gas valves.

Extended Period Shutdown

Turn off thermostat or set to "UNOCCUPIED" mode. Close all gas valves (both internal and external to unit) to guarantee no gas leaks into combustion chamber. Turn off power to unit. All access panels and covers must be in place and secured.

HEATING SYSTEM SERVICE CHECKS

C.S.A. Certification

All units are C.S.A. design certified without modifications. Refer to the NF80X***V**R Installation Instruction.

HEATING SYSTEM SERVICE CHECKS (Cont.)

Gas Piping

⚠CAUTION If a flexible gas connector is required or allowed by the authority that has jurisdiction, black iron pipe shall be installed at the gas valve and extend outside the furnace cabinet.

⚠WARNING Do not over torque (800 in-lbs) or under torque (350 in-lbs) when attaching the gas piping to the gas valve.

Gas supply piping should not allow more than 0.5”W.C. drop in pressure between gas meter and unit. Supply gas pipe must not be smaller than unit gas connection.

Compounds used on gas piping threaded joints should be resistant to action of liquefied petroleum gases.

Testing Gas Piping

⚠IMPORTANT In case emergency shutdown is required, turn off the main shut-off valve and disconnect the main power to unit. These controls should be properly labeled by the installer.

When pressure testing gas lines, the gas valve must be disconnected and isolated. Gas valves can be damaged if subjected to more than 0.5 psig (14” W.C.). See **Figure 19**. If the pressure is equal to or less than 0.5 psig (14”W.C.), use the manual shut-off valve before pressure testing to isolate furnace from gas supply.

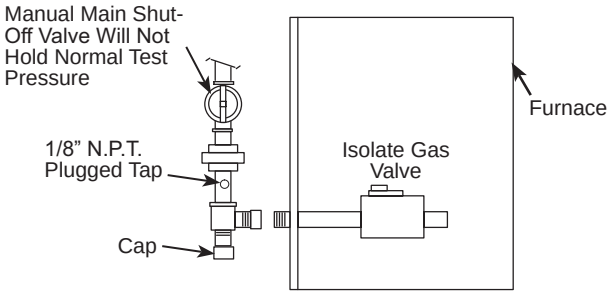

Figure 19.

When checking piping connections for gas leaks, use preferred means. Kitchen detergents can cause harmful corrosion on various metals used in gas piping. Use of a specialty Gas Leak Detector is strongly recommended.

Do not use matches, candles, flame or any other source of ignition to check for gas leaks.

Testing Gas Supply Pressure

⚠IMPORTANT For safety, connect a shut-off valve between the manometer and the gas tap to permit shut off of gas pressure to the manometer.

A port on the inlet side of the gas valve provides access to the supply pressure tap. See **Figure 18**. Loosen the screw and connect a manometer to measure supply pressure. The minimum supply line pressure is 4.5” - 10.5”w.c. For natural and 11.0 - 13.0” wc for LP/Propane. Tighten after measurements have been taken.

Proper Gas Flow (Approximate)

Furnace should operate at least 5 minutes before checking gas flow. Determine time in seconds for two revolutions of gas through the meter. (Two revolutions assures a more accurate time.) Divide by two and compare to time in **Table 20**. If manifold pressure matches **Table 21** and rate is incorrect, check gas orifices for proper size and restriction. Remove temporary gas meter if installed.

NOTE: To obtain accurate reading, shut off all other gas appliances connected to meter.

Table 20. Gas Meter Clocking Chart

Unit	Seconds for One Revolution			
	Natural		LP/Propane	
	1 cu ft Dial	2 cu ft Dial	1 cu ft Dial	2 cu ft Dial
-060	60	120	150	300
-080	45	90	112	224
-100	36	72	N/A	N/A
Natural-1000 btu/cu ft			LP-2500 btu/cu ft	

Gas Manifold and System Operating Pressure Check

1. Turn off the electrical power and gas supply to the furnace.
2. Check the gas manifold pressure on the SIT gas valve by opening the manifold pressure post. See **Figure 18**. Using a 4.5-5 x 0.8 mm screw driver, loosen the slot headed brass sealing screws. The sealant screws can not be removed. Install hoses and meter as shown in **Figure 20**.
3. Turn on electrical power and gas supply to the furnace. Start Furnace.
4. After allowing unit to stabilize for 8 minutes, record manifold pressure and compare to value in **Table 21**. If manifold pressure is within range, rate check is complete. If manifold pressure is not within range, shut down furnace and move to step 5.
   Gas Valve is not adjustable. Do not adjust manifold pressure.
5. Install hoses and meter as shown in **Figure 21** for system operating pressure measurement. The system operating pressure is monitored by the pressure switch and is the pressure drop across the air orifice.
6. Turn on electrical power and gas supply to the furnace. Start Furnace.

HEATING SYSTEM SERVICE CHECKS (Cont.)

7. Record system operating pressure and compare to value in **Table 22**. If system operating pressure is within range replace valve. If the system operating pressure is not within range go to “Troubleshooting” **Figure 23**.
8. Shut off unit and remove manometer and signal meter after accurate readings has been obtained. Remove measurement hoses. Tighten the brass sealing screws loosened in step 2. Sealant screws must be tightened before firing the unit.
9. Restart unit and check for gas leaks. Seal any leaks found.

If the unit has difficulty igniting or ignites with loud resonance see “Air Orifice Replacement” and “Troubleshooting” Figure 23.

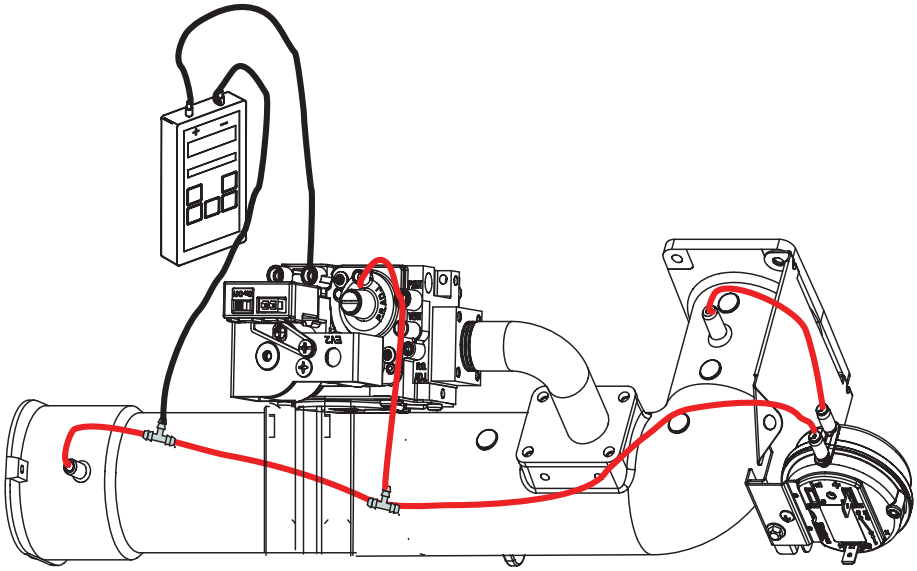

Figure 20. Gas Manifold Pressure Measurement

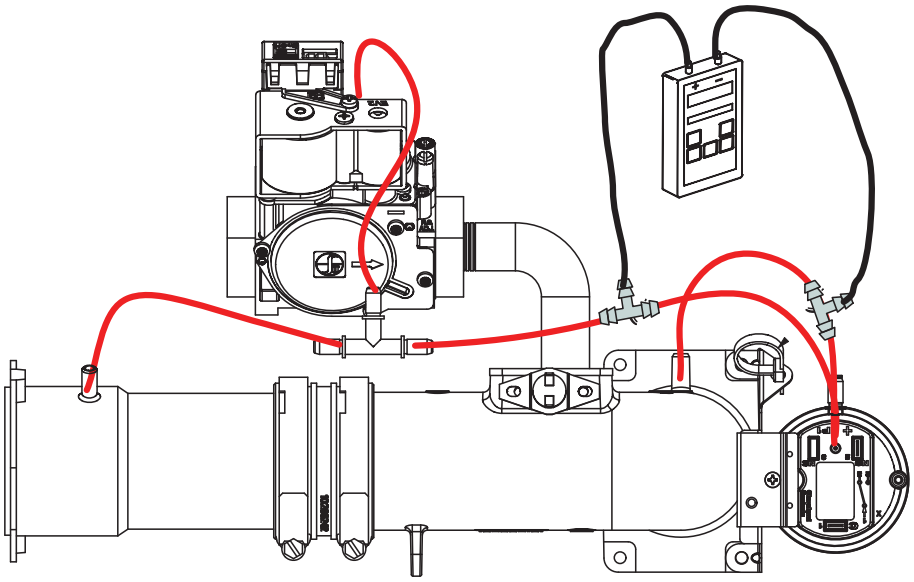

Figure 21. System Operating Pressure Measurement

HEATING SYSTEM SERVICE CHECKS (Cont.)

Table 21. Gas Manifold Pressure

Capacity	Gas Manifold Pressure (in. w.c.)	
Two-Stage Models	Low Fire	High Fire
060	0.0 - 0.10	0.0 - 0.10
080		
100		

Table 22. System Operating Pressures (in.w.c.) at Different Altitudes

Capacity	System Operating Pressure at 0 - 500ft		System Operating Pressure at 500ft - 4500ft		System Operating Pressure at 4500ft - 7500ft	
Two-Stage Models	Low Fire	High Fire	Low Fire	High Fire	Low Fire	High Fire
060	0.49 - 0.62	1.15 - 1.36	0.45 - 0.58	1.08 - 1.29	0.41 - 0.54	0.96 - 1.17
080	0.43 - 0.56	1.12 - 1.26	0.39 - 0.52	1.04 - 1.18	0.34 - 0.47	0.94 - 1.08
100	0.48 - 0.62	1.11 - 1.31	0.48 - 0.62	1.09 - 1.29	0.48 - 0.62	0.95 - 1.15

Table 23. Air Orifice Replacement

Capacity	Production		Difficult Igniting (Need less combustion air)	
Two-Stage Models	Air Production Size (Part #)	Catalog Number	Air Orifice Size (Part #)	Catalog Number
060	0.880 (28)	23A31	0.860 (05)	25B19
080	1.030 (30)	24G44	1.000 (02)	19X30
100	1.160 (29)	23A32	1.140 (24)	22J97

HEATING SYSTEM SERVICE CHECKS (Cont.)

Air Orifice Replacement

Do not replace the air orifice until the problem has been determined. If the unit has difficulty igniting the air orifice is oversized and brings in too much combustion air. If the unit ignites but with loud resonance, go to Troubleshooting. The air orifice is located inside the gray coupling between the clamps. See **Figure 22** for air orifice location.

1. Turn off the electrical power and gas supply to the furnace.
2. Remove the air pressure tubing from the fitting on the aluminum elbow and air intake coupling.
3. Use a 5/16” nut driver to loosen the clamp on the right side of the gray coupling.
4. Remove the four screws on the aluminum elbow, make note of the pressure switch bracket location. It may be necessary to disconnect the gas pipe to the gas valve before removing the screws.
5. Remove the air orifice. Check the “Part” number stamped on the air orifice. See **Table 23**. If incorrect, replace with proper air orifice. Repeat manifold check. If air orifice is correct then it must be replaced with a different size orifice. See **Table 23** for replacement.
6. Reinstall the air orifice on the right side of the coupling and push firmly into place.
7. Reinstall aluminum elbow with the four screws removed from step 4. Make sure the gray coupling is fully seated again the aluminum elbow and the pressure switch bracket is in the correct location. The bracket should be under the screw head and not under the flange on the aluminum elbow. Tighten clamp to secure the gray coupling. Reinstall the gas pipe to gas valve.
8. Reconnect the air pressure tubing.
9. Repeat manifold and system operating pressure check. If unit ignites and manifold and system operating pressures are correct, move on to combustion check. If unit still does not ignite or ignites with loud resonance go to Troubleshooting.

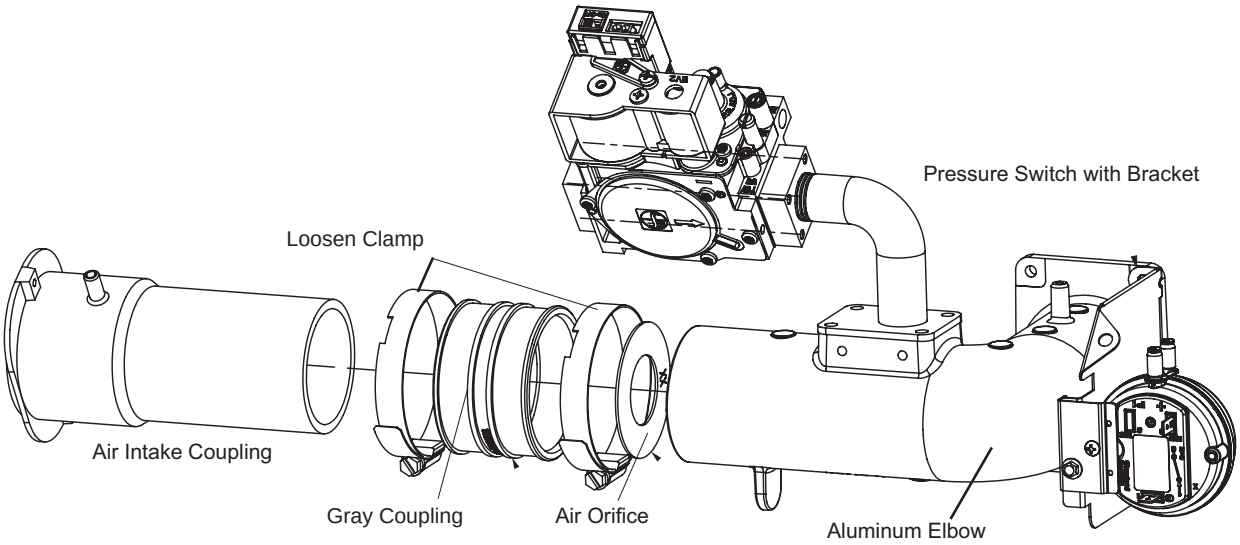

Figure 22. Air Orifice Location

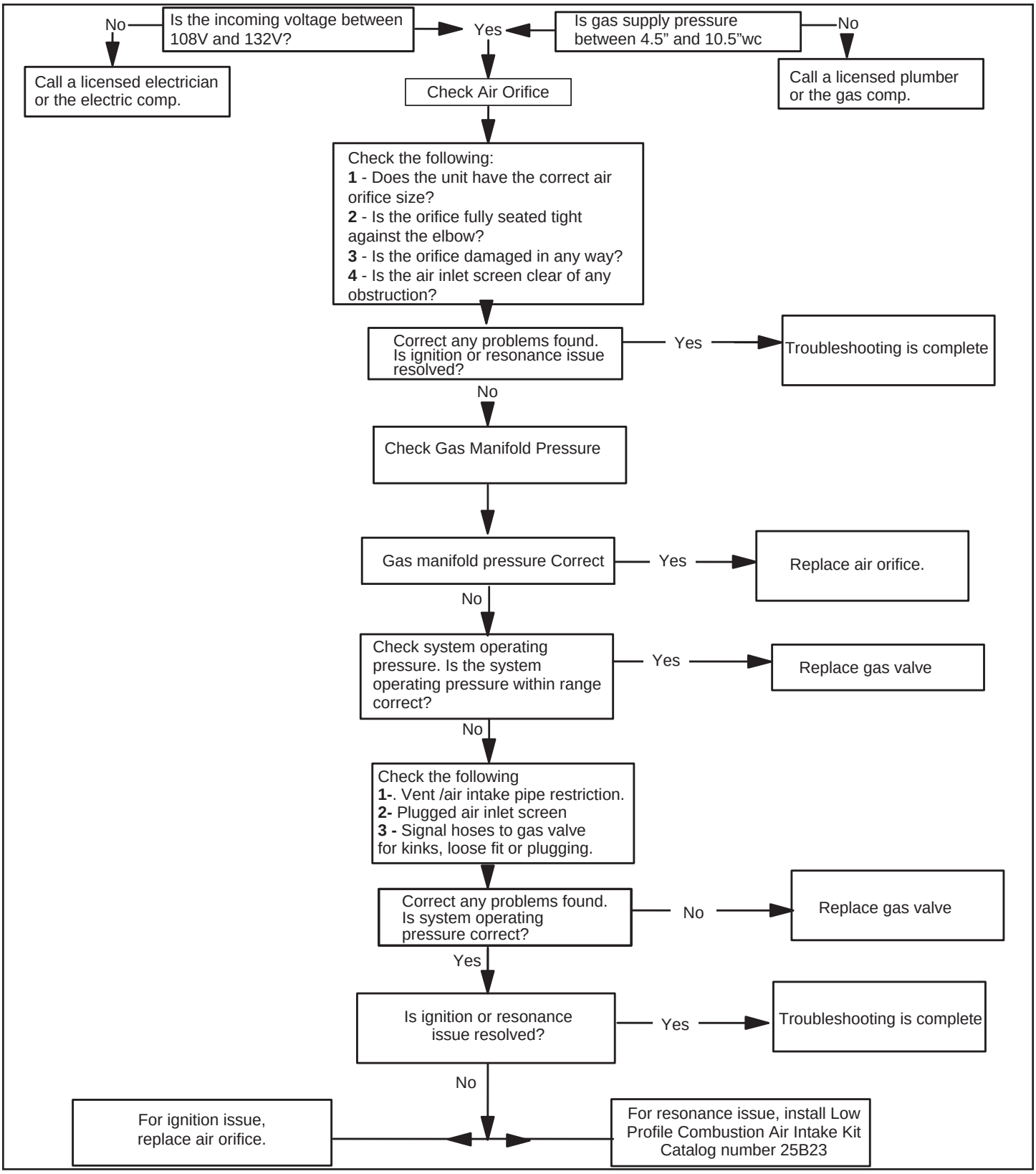

Figure 23. Troubleshooting Poor Ignition or Combustion Resonance Issues

TYPICAL OPERATING CHARACTERISTICS

Blower Operation and Adjustment

1. Blower operation is dependent on thermostat control system
2. Generally, blower operation is set at thermostat subbase fan switch. With fan switch in ON position, blower operates continuously. With fan switch in AUTO position, blower cycles with demand or runs continuously while heating or cooling circuit cycles.
3. Depending on the type of indoor thermostat, blower and entire unit will be off when the system switch is in OFF position.

Temperature Rise (Figure 24)

Temperature rise for NF80X***V**R units depends on unit input, blower speed, blower horsepower and static pressure as marked on the unit rating plate. The blower speed must be set for unit operation within the range of “TEMP. RISE °F” listed on the unit rating plate.

TEMPERATURE RISE

Supply Duct Temperature _____
Return Duct Temperature – _____
Temperature Rise = _____

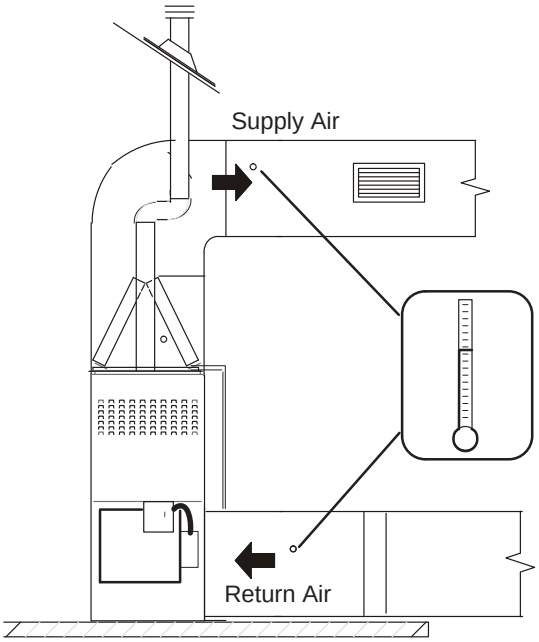

Figure 24.

External Static Pressure

1. Tap locations shown in **Figure 25**.
2. Punch a 1/4” diameter hole in supply and return air plenums. Insert manometer hose flush with inside edge of hole or insulation. Seal around the hose with permagum. Connect the zero end of the manometer to the discharge (supply) side of the system. On ducted systems, connect the other end of manometer to the return duct as above.
3. With only the blower motor running and the evaporator coil dry, observe the manometer reading. Adjust blower motor speed to deliver the air desired according to the job requirements. For heating speed external static pressure drop must not be more than 0.5” W.C. For cooling speed external static pressure drop must not be more than 0.8” W.C.
4. Seal the hole when the check is complete.

EXTERNAL STATIC PRESSURE

Supply Duct Static _____
Return Duct Static + _____
Total Duct Static = _____
(dry coil)

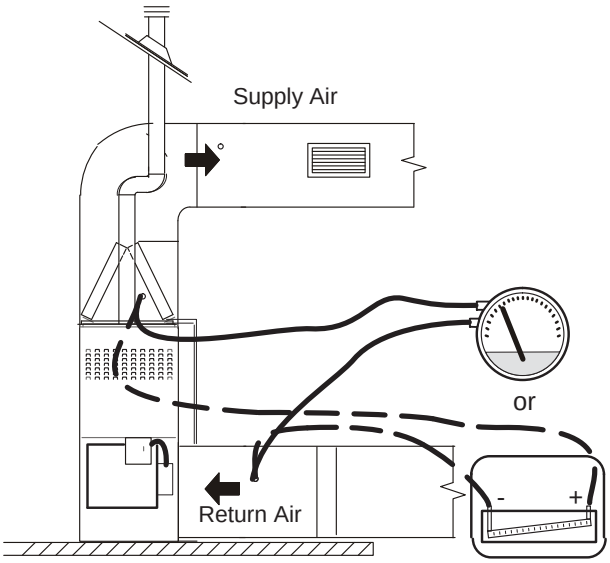

Figure 25.

MAINTENANCE

Annual Furnace Maintenance

At the beginning of each heating season, and to comply with the GE Appliances Limited Warranty, your system should be checked by a licensed professional technician (or equivalent) as follows:

⚠WARNING Disconnect power before servicing unit.

⚠WARNING **Electric Shock Hazard.** Can cause injury or death. Unit must be properly grounded in accordance with national and local codes.

⚠WARNING **Fire Hazard.** Use of aluminum wire with this product may result in a fire, causing property damage, severe injury or death. Use copper wire only with this product.

⚠WARNING If a high efficiency filter is being installed as part of this system to ensure better indoor air quality, the filter must be properly sized. High efficiency filters have a higher static pressure drop than standard efficiency glass/ foam filters. If the pressure drop is too great, system capacity and performance may be reduced. The pressure drop may also cause the limit to trip more frequently during the winter and the indoor coil to freeze in the summer, resulting in an increase in the number of service calls.

Before using any filter with this system, check the specifications provided by the filter manufacturer against the data given in the appropriate GE Appliances Product Specifications bulletin.

⚠WARNING The inner blower access panel and vent pipe must be securely in place when the blower and burners are operating. Gas fumes, which could contain carbon monoxide, can be drawn into living space resulting in personal injury or death.

⚠CAUTION Label all wires prior to disconnection when servicing controls. Wiring errors can cause improper and dangerous operation. Verify proper operation after servicing.

1. Check wiring for loose connections, voltage at indoor unit and amperage of indoor motor.
2. Check the condition of the belt and shaft bearings if applicable.
3. Inspect all gas pipe and connections for leaks.
4. Check the cleanliness of filters and change if necessary (monthly).
5. Check the condition and cleanliness of burners and heat exchanger and clean if necessary.
6. Check the cleanliness of blower assembly and clean the housing, blower wheel and blower motor if necessary. The blower motors are prelubricated for extended bearing life. No further lubrication is needed.
7. Inspect the combustion air inducer and clean if necessary.
8 . Evaluate the heat exchanger integrity by inspecting the heat exchanger per the AHRI heat exchanger inspection procedure. This procedure can be viewed at www.**ahrinet.org**.
9. Ensure sufficient combustion air is available to the furnace. Fresh air grilles and louvers (on the unit and in the room where the furnace is installed) must be properly sized, open and unobstructed to provide combustion air.
10. Inspect the furnace venting system to make sure it is in place, structurally sound, and without holes, corrosion, or blockage. Vent system must be free and clear of obstructions and must slope upward away from the furnace . Vent system should be installed per the National Fuel Gas Code.
11. Inspect the furnace return air duct connection to ensure the duct is sealed to the furnace. Check for air leaks on supply and return ducts and seal where necessary.
12. Check the condition of the furnace cabinet insulation and repair if necessary.
13. Perform a complete combustion analysis during the furnace inspection to ensure proper combustion and operation. Consult Service Literature for proper combustion values.
14. Verify operation of CO detectors and replace batteries as required.
15. Inspect the Low GWP sensor(s) and rubber sleeve.

Perform a general system test. Turn on the furnace to check operating functions such as the start-up and shut-off operation.

1. Check the operation of the ignition system, inspect and clean flame sensor. Check microamps before and after. Check controls and safety devices (gas valve, flame sensor, temperature limits). Consult Service Manual for proper operating range. Thermal Limits should be checked by restricting airflow and not disconnecting the indoor blower.
2. Verify that system total static pressure and airflow settings are within specific operating parameters.
3. Clock gas meter to ensure that the unit is operating at the specified firing rate. Check the supply pressure and the manifold pressure. On two-stage gas furnaces check the manifold pressure on high fire and low fire. Manifold pressure is NOT adjustable. Do not attempt to adjust manifold pressure. Verify correct temperature rise.

MAINTENANCE (Cont.)

Heat Exchanger and Burners

NOTE: Use papers or protective covering in front of the furnace during cleaning.

1. Turn off both electrical and gas power supplies to furnace.
2. Remove the air intake assembly from outside the cabinet. The assembly is not secured with screws or glue and will remove with ease. See **Figure 26**.
3. Remove flue pipe and top cap (some applications top cap can remain) from the unit.
4. Label the wires from gas valve, thermal switch, primary limit switch and make-up box then disconnect them.
5. Remove the screws that secure the combustion air inducer to the collector box.
6. Disconnect gas supply piping. Remove the screw securing the air fuel plenum and remove along with the air intake assembly as one component.
7. Remove screws from both sides, top and bottom of vestibule panel.
8. Remove heat exchanger. It may be necessary to spread cabinet side to allow more room. If so, remove five screws from the left side or right side of cabinet. See **Figure 27**.
9. Back wash using steam. Begin from the burner opening on each tube. Steam must not exceed 275°F.
10. To clean burner, remove from the air gas plenum and run a vacuum cleaner over the face of burner. Visually inspect inside the burner for any blockage caused by foreign matter. Remove any blockage. **Figure 28** shows burner detail. Replace gasket between burner plate and air fuel plenum then re-install burner plate.
11. To clean the combustion air inducer visually inspect and using a wire brush clean where necessary. Use compressed air to clean off debris and any rust.
12. Reinstall heat exchanger in vestibule. (Replace the five screws in the cabinet from step 10 if removed).
13. Reinstall the air fuel plenum and air intake assembly. Re-install the combustion air inducer assembly. Make note to re-install all screws. Failure to replace all screws may cause leaks.
14. Reconnect all wires.
15. Reconnect top cap and vent pipe to combustion air inducer outlet.
16. Reconnect gas supply piping.
17. Using a rubber mallet reconnect the air intake assembly removed from the outside of the cabinet in step 2.
18. Turn on power and gas supply to unit.
19. Set thermostat and check for proper operation.
20. Check all piping connections, factory and field, for gas leaks. Use a leak detecting solution or other preferred means.

⚠WARNING Some soaps used for leak detection are corrosive to certain metals. Carefully rinse piping thoroughly after leak test has been completed. Do not use matches, candles, flame or other sources of ignition to check for gas leaks.

21. If a leak is detected, shut gas and electricity off and repair leak.
22. Repeat steps 20 and 21 until no leaks are detected.
23. Replace access panel.

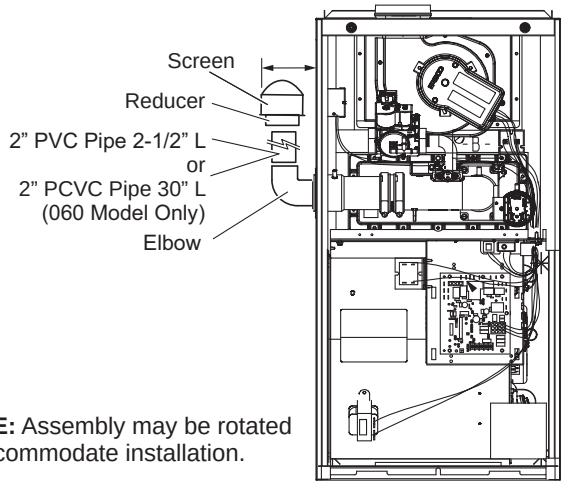

NOTE: Assembly may be rotated to accommodate installation.

Figure 26. Air Intake Pipe Connections Upflow

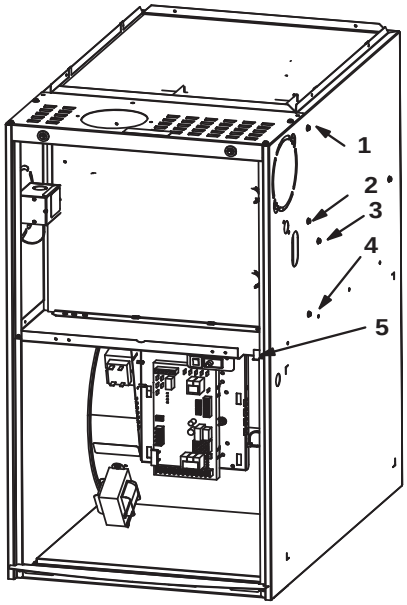

Remove 5 screws if necessary (cabinet for reference only)

Figure 27.

MAINTENANCE (Cont.)

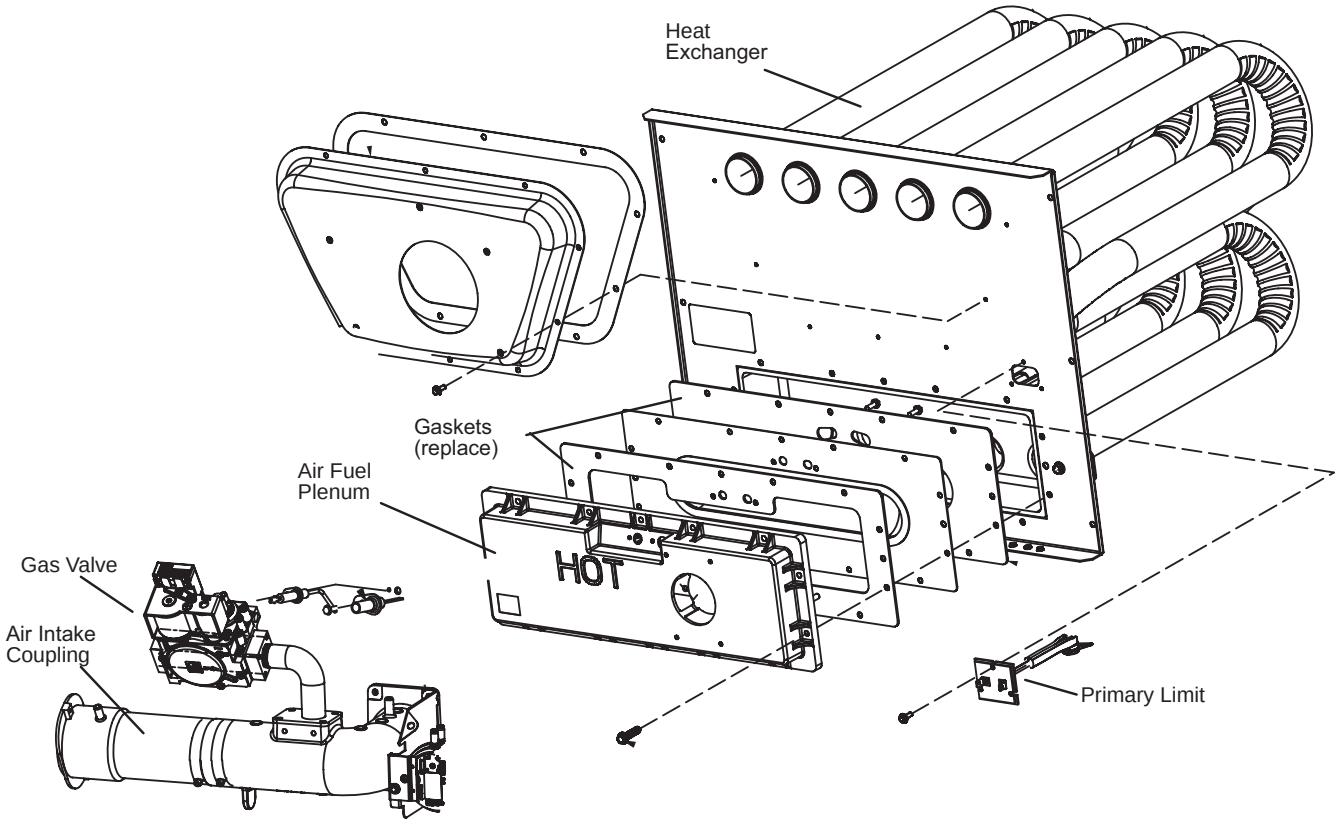

Figure 28. Heat Exchanger and Burner Removal

LOW GWP APPLICATION

⚠WARNING For use with GE Appliances approved evaporator coil and LGWP sensors only. Use original manufacturer recommended LGWP sensors if using non GE Appliances approved evaporator coil.

Connecting the Furnace Control Board Sensor.

See Figure 31 and follow steps below:

1. Route sensor wire #1 through provided grommet. Form a drip loop below the control board on upflow installations to prevent condensate dripping on the control board.
2. Avoid sharp edges when routing sensor wire during installation.
3. Sensor wire must not block view of 7 segment LED .

Ensure the cable is properly seated into the SENSOR 1 plug (LGWP1). The Molex plug clip should lock into the Molex connection point for a secured connection, as shown below in **Figure 29**. Verify the connection is free of dust, debris, and moisture.

NOTE: In confined space applications, connect the second sensor to the SENSOR 2 plug (LGWP2). Refer to evaporator coil installation instructions for more detail.

Figure 29. Two Stage Variable Speed Control

Low GWP Dip Switch Settings

Adjust the DIP switch settings to the sensor configuration. Failure to do so will cause faults on power-up. See **Figure 30** and **Table 24**.

Figure 30.

Table 24. DIP Switch Settings

Configuration	Switch 1	Switch 2
One (1) sensor, connected to SENSOR 1 plug	OFF (enable)	ON (disable)
Two (2) sensors, connected to SENSOR 1 plug and SENSOR 2 plug	OFF (enable)	OFF (enable)
No sensor R410A or heat only applications	ON (disable)	ON (disable)

In single sensor configurations, the sensor must be connected to the SENSOR 1 plug (LGWP1). Configurations other than the ones shown in **Table 24** will cause a servicing fault.

Each DIP switch corresponds to a sensor position (i.e., DIP switch 1 to sensor 1; DIP switch 2 to sensor 2). The default factory switch positions are set to OFF (ENABLED)

The furnace control board software reads the OFF position as an active sensor. A sensor should be present for the corresponding sensor connector. Setting the DIP switch to ON disables the sensor position.

Secondary Sensor Requirements

Additional Line Sets
If additional refrigerant line joints are present outside of the line set sleeve and a secondary refrigerant detection sensor is required, its installation must comply with the requirements listed in Refrigerant Detection Sensor Kit (27V53). See **Figure 31** for routing the secondary sensor cable through the furnace cabinet.

⚠WARNING **For Furnace only applications or Furnace replacement in a Non-Low GWP applications,** the LOW GWP sensors should be disabled, otherwise the blower will operate continuously. To do this, the Low GWP Dip switches setting for both – Sensor 1 and the Sensor 2 must be moved to the ON position.

Furnace Control Board Low GWP Modes of Operation

The modes of operation for the furnace control board are Initializing, Normal, Leak Detected, and Fault.

Initializing
The furnace control board is establishing connection with the refrigerant detection sensor and is completing an initial five-minute purge sequence.

Normal
The HVAC system is functioning normally. The furnace control board has not detected a refrigerant leak.

Leak Detected
When the furnace control board detects a refrigerant leak:

1. The furnace control board shuts off the (R) input (24VAC power) to the thermostat, which de-energizes the outdoor unit compressor and heat sources, such as gas and/or electric strip heat. No heating or cooling demands will be met.
2. The furnace control board activates the blower (high speed). The blower purges refrigerant from the cabinet, plenum, and ductwork.
3. After the furnace control board determines the refrigerant levels are below the safety threshold, the blower will continue to operate for the remainder of the seven (7) -minute cycle.
4. After the blower sequence is complete, the HVAC system resumes normal operation.

NOTE: The HVAC system may not maintain a cooling or heating setpoint if a significant leak exists. Any refrigerant leaks that remain unaddressed for an extended time may cause the HVAC system to shut down on a low refrigerant pressure limit condition.

Fault
When a Low GWP fault is detected by the furnace control board, the indoor unit blower engages and remains engaged at a constant air flow output until the fault is cleared.

NOTE: See **Table 4** “Ignition control diagnostic codes”.

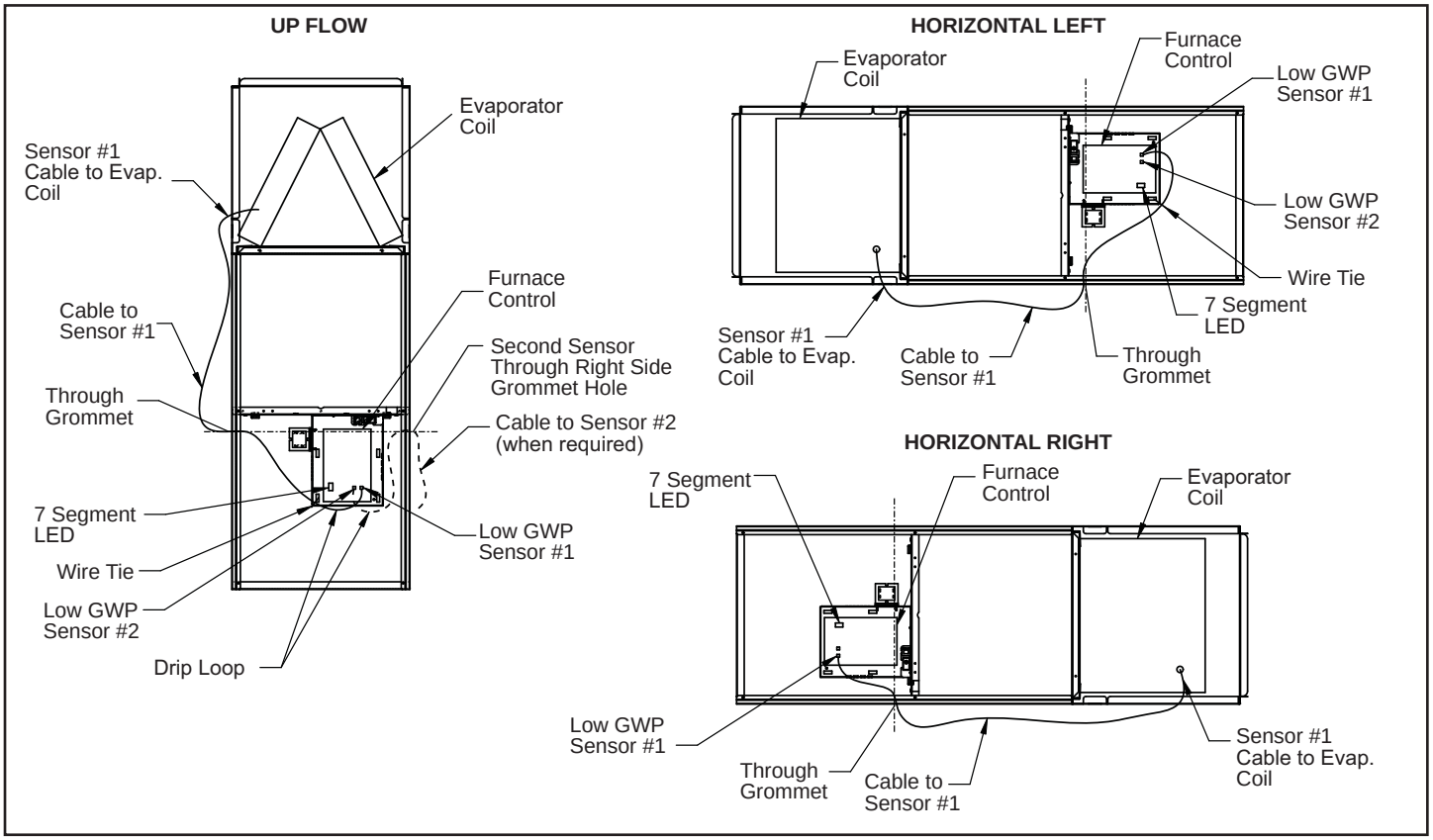

Figure 31.

LGWP Test Button Functionality

The furnace control board is equipped with a **Test/Reset** push button. The Test button can be used to perform several functions, depending on the mode of operation of the furnace control board.

Table 25 lists the functions of the Test button during each mode of operation.

Table 25. LGWP Test Button Function

Mode of Operation	Press the Test Button to:
Normal	Trigger a leak detection response. Verify all equipment is wired correctly into the furnace blower control board (after installation).
Leak Detected	Reset the furnace control board to a normal mode of operation after a previous leak has been detected and purged from the HVAC system.
Fault	Reset the furnace control board after troubleshooting and resolving a fault condition. If the fault is not resolved, the furnace control board will enter the Fault mode again.

LGWP Test Button - Additional Functions

Table 26 lists the additional functions of the Test Button while the furnace control board is functioning within the states of Initializing, Monitoring, Leak Detection, Servicing and Fault.

Table 26. Additional Button Functions

State	Press	Action
Initializing	Short	Skips remaining pre-purge after sensors are recognized by the furnace control board
Initializing	Long	Reset control
Monitoring	Short	Clear purge-counter if prior mitigation has occurred; Test mitigation
Monitoring	Long	Reset control
Mitigating	Short	If testing mitigation, end test
Servicing	Short	Reevaluate fault condition - if cleared return to monitoring, otherwise update indicator
Servicing	Long	Reset control
Fault	Short	Reevaluate fault condition - if cleared return to monitoring, otherwise update indicator
Fault	Long	Reset control

External Alarm

(For applications with external alarms wired directly to the furnace control board.)

The furnace control board triggers the external alarm system when it enters Leak Detected mode. For alarm notifications, the furnace control board provides a dry relay contact that is rated 3A at 30 VAC/DC.

THERMOSTAT COMPATIBILITY

Thermostats that preserve memory settings are compatible with the furnace control board. Examples include:

- Battery-powered thermostats
- Analog Thermostat
- Late-model programmable thermostats

NOTE: Early-generation digital and programmable thermostats may not retain the operation mode and temperature setpoints after a power outage.

The following scenarios are likely to occur when home occupants are not available to adjust the thermostat setpoints as the system is recovering from leak detection and resuming normal operation:

- Heating could be lost during a cold night
- Cooling could be lost during a hot day
- The thermostat could reset to an incorrect temperature setpoint

START UP PROCEDURE

The furnace control board is equipped with a **LGWP Test/ Reset** button, see Test Button Functionality. After the furnace control board has been mounted and wired, restore power to the HVAC system. The system will then run through a purge sequence for five minutes. After the purge sequence is complete, proceed to testing cooling demand and heating demand.

Cooling Demand

1. Prompt a cooling demand at the thermostat.
2. Press the LGWP Test button on the furnace control board. The system then executes a leak detection response.
3. Observe the following sequence:
   a. The LED indicator for leak detection. See **Table 4** ”Igntion control diagnostic codes”.
   b. The blower powers up.
   c. The outdoor compressor powers down.
4. Press the **LGWP Test** button to terminate the simulated Leak Detected mode upon test completion
5. **Heating Demand**

1. Prompt a heating demand at the thermostat.
2. Press the LGWP Test button on the furnace control board. The system then executes a leak detection response.
3. Observe the following sequence:
   a. The LED indicator for leak detection. See **Table 4** “Ignition control diagnostic codes”.
   b. The blower powers up.
   c. The gas burners power down.
   d. The outdoor compressor powers down.
4. Press the **LGWP Test** button to terminate the simulated Leak Detected mode upon test completion.

The installation of the furnace control board is complete after both sequences are successfully completed.

WIRING DIAGRAM (NON COMMUNICATING) AND SEQUENCE OF OPERATION

When there is a call for heat, the integrated control runs a self check. The control checks for S10 primary limit and the S47 thermal switch normally closed contacts. The control also checks for S102 high heat and S128 low heat prove switch normally open contacts. Once self check is complete and all safety switches are operational, heat call can continue.

NOTE: The ignition control thermostat selection DIP switch is factory-set in the "TWO-STAGE" position.

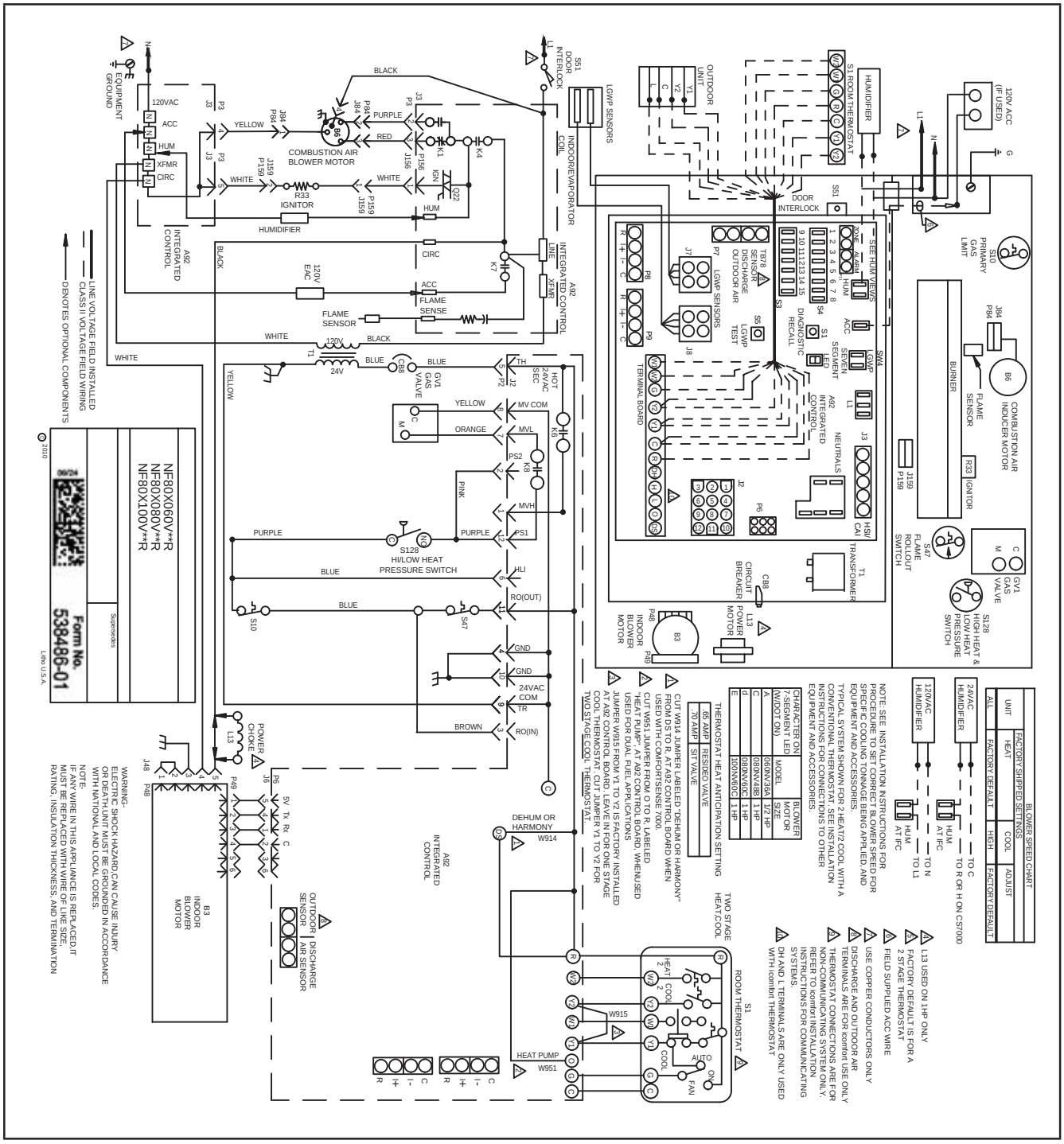

Applications Using a Two-Stage Thermostat

Heating Sequence -- Integrated Control Thermostat Selection DIP Switch 1 OFF in “Two-Stage” Position (Factory Setting)

1. On a call for heat, thermostat first-stage contacts close sending a signal to the integrated control. The integrated control runs a self-diagnostic program and checks high temperature limit switches for normally closed contacts and pressure switches for normally open contacts. The combustion air inducer is energized at low speed.
2. Once the control receives a signal that the low pressure switch has closed, the combustion air inducer begins a 15-second pre-purge in low speed.

   NOTE: If the low fire pressure switch does not close the combustion air inducer will switch to high fire. After a 15 second pre-purge the high fire pressure switch will close and the unit will begin operation on high fire. After 10 to 20 seconds of high fire operation the unit will switch to low fire.
3. After the pre-purge is complete, a 20-second initial ignitor warm-up period begins. The combustion air inducer continues to operate at low speed.
4. After the 20-second warm-up period has ended, the gas valve is energized on low fire (first stage) and ignition occurs. At the same time, the control module sends a signal to begin an indoor blower 30-second ON-delay. When the delay ends, the indoor blower motor is energized on the low fire heating speed, the HUM contacts close energizing the humidifier and 120V ACC terminal is energized. The furnace will continue this operation as long as the thermostat has a first-stage heating demand.
5. If second-stage heat is required, the thermostat second-stage heat contacts close and send a signal to the integrated control. The integrated control initiates a 30-second second-stage recognition delay.
6. At the end of the recognition delay, the integrated control energizes the combustion air inducer at high speed. The control also checks the high fire (second stage) pressure switch to make sure it is closed. The high fire (second stage) gas valve is energized and the indoor blower motor is energized for operation at the high fire heating speed.
7. When the demand for high fire (second stage) heat is satisfied, the combustion air inducer is switched to the low-fire heating speed and the high-fire (second stage) gas valve is de-energized. The low-fire (first stage) gas valve continues operation. The indoor blower motor is switched to the low-fire heating speed.
8. When the thermostat demand for low-fire (first stage) heat is satisfied, the gas valve is de-energized and the field-selected indoor blower off delay begins. The combustion air inducer begins a 5-second post-purge period.
9. When the combustion air post-purge period is complete, the inducer, the HUM contacts as well as the 120V ACC terminals are de-energized. The indoor blower is de-energized at the end of the off delay.

Heating Sequence -- Integrated Control Thermostat Selection DIP Switch 1 ON in “Single-Stage” Position

NOTE: In these applications, two-stage heat will be initiated by the integrated control if heating demand has not been satisfied after the field adjustable period (7 or 12 minutes).

1. On a call for heat, thermostat first-stage contacts close sending a signal to the integrated control. The integrated control runs a self-diagnostic program and checks high temperature limit switches for normally closed contacts and pressure switches for normally open contacts. The combustion air inducer is energized at low speed.
2. Once the control receives a signal that the pressure switch has closed, the combustion air inducer begins a 15-second pre-purge in low speed.

   NOTE: If the low fire pressure switch does not close the combustion air inducer will switch to high fire. After a 15 second pre-purge the high fire pressure switch will close and the unit will begin operation on high fire. After 10 to 20 seconds of high fire operation the unit will switch to low fire.
3. After the pre-purge is complete, a 20-second initial ignitor warm-up period begins. The combustion air inducer continues to operate at low speed.
4. After the 20-second warm-up period has ended, the gas valve is energized on low fire (first stage) and ignition occurs. At the same time, the control module sends a signal to begin an indoor blower 30-second ON-delay. When the delay ends, the indoor blower motor is energized on the low fire heating speed and the HUM contacts are energized. The integrated control also initiates a second-stage on delay (factory-set at 7 minutes; adjustable to 12 minutes).
5. If the heating demand continues beyond the secondstage on delay, the integrated control energizes the combustion air inducer at high speed. The control also checks the high fire (second stage) pressure switch to make sure it is closed. The high fire (second stage) gas valve is energized and the indoor blower motor is energized for operation at the high fire heating speed.
6. When the thermostat heating demand is satisfied, the combustion air inducer begins a 5-second low speed post-purge. The field-selected indoor blower off delay begins. The indoor blower operates at the low-fire heating speed.
7. When the combustion air post-purge period is complete, the inducer, the HUM contacts as well as the 120V ACC terminals are de-energized. The indoor blower is de-energized at the end of the off delay.

Service Information

Thermostat	DIP Switch Settings and On-Board Links		Wiring Connections
	DIP Switch 1 Thermostat Heating Stages	On Board Links Must Be Cut To Select System Options	
1 Heat / 1 Cool **NOTE:** Use DIP switch 2 to set second-stage heat ON delay. OFF-7 minutes. ON-12 minutes.	ON	DO NOT CUT ANY ON-BOARD LINKS 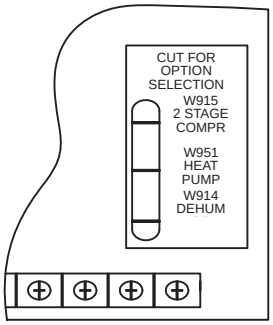	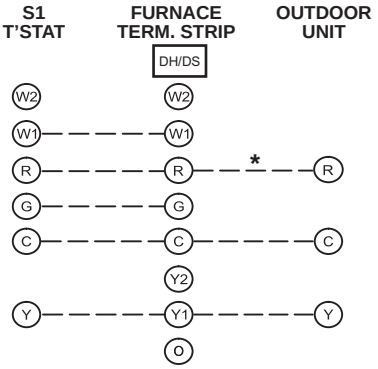
1 Heat / 2 Cool **NOTE:** Use DIP switch 2 to set second-stage heat ON delay. OFF-7 minutes. ON-12 minutes.	ON	CUT ON-BOARD LINK W915 2 STAGE COMPR 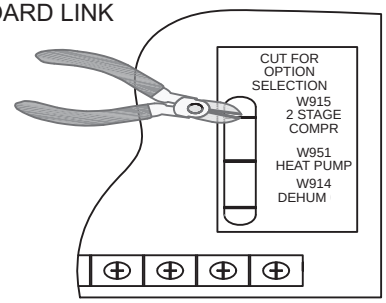	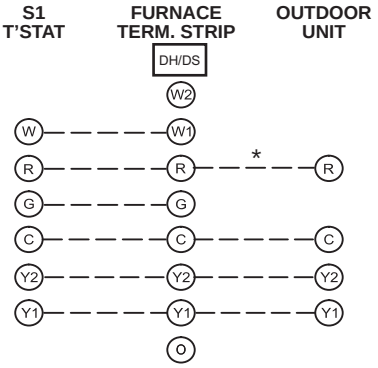
1 Heat / 2 Cool with t'stat with humidity control **NOTE:** Use DIP switch 2 to set second-stage heat ON delay. OFF-7 minutes. ON-12 minutes.	ON	CUT ON-BOARD LINK W915 2 STAGE COMPR CUT ON-BOARD LINK W914 DEHUM 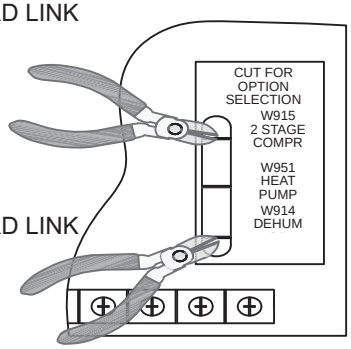	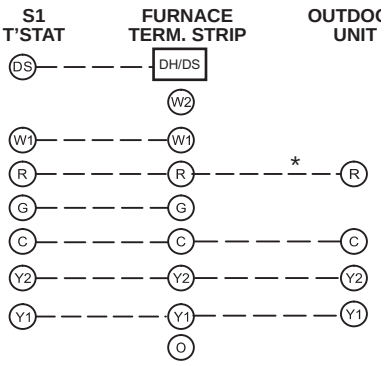

* Not required on all units.

Service Information

Thermostat	DIP Switch Settings and On-Board Links		Wiring Connections
	DIP Switch 1 Thermostat Heating Stages	On Board Links Must Be Cut To Select System Options	
2 Heat / 2 Cool	OFF	CUT ON-BOARD LINK W915 2 STAGE COMPR 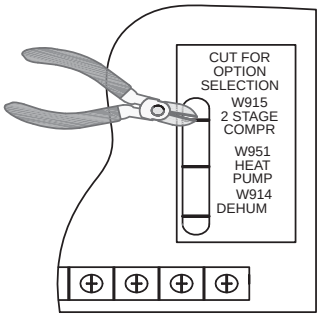	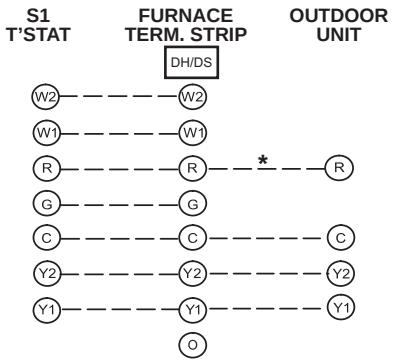
2 Heat / 2 Cool with t'stat with humidity control.	OFF	CUT ON-BOARD LINK W915 2 STAGE COMPR CUT ON-BOARD LINK W914 DEHUM 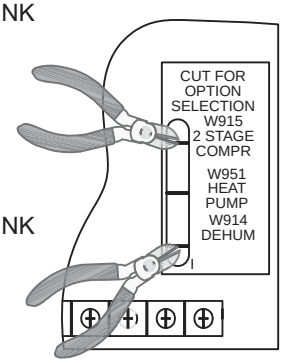	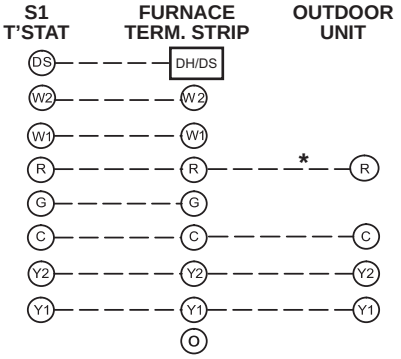
2 Heat / 1 Cool with t'stat with humidity control.	OFF	CUT ON-BOARD LINK W914 DEHUM 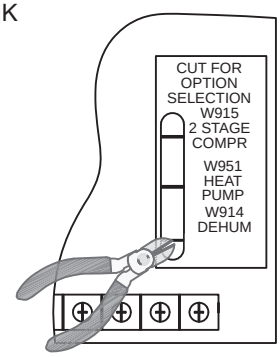	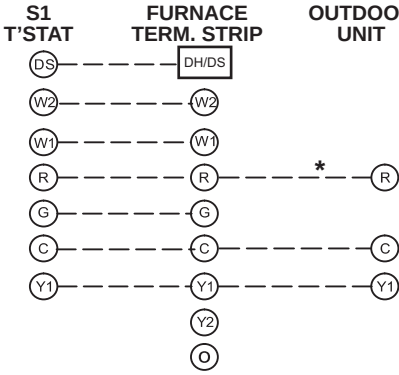
2 Heat / 1 Cool.	OFF	DO NOT CUT ANY ON-BOARD LINKS 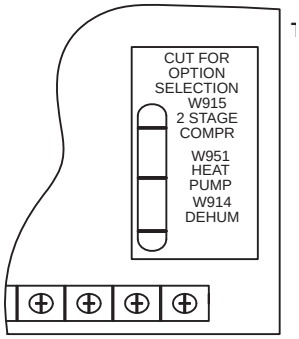	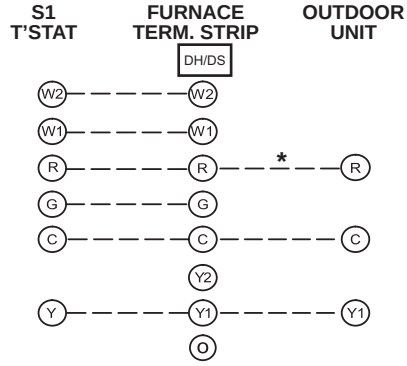

Service Information

Thermostat	DIP Switch Settings and On-Board Links		Wiring Connections
	DIP Switch 1 Thermostat Heating Stages	On Board Links Must Be Cut To Select System Options	
Dual Fuel Single Stage Heat Pump Thermostat w/ dual fuel capabilities Capable of 2 stage gas heat control	OFF	CUT ON-BOARD LINK W951 HEAT PUMP 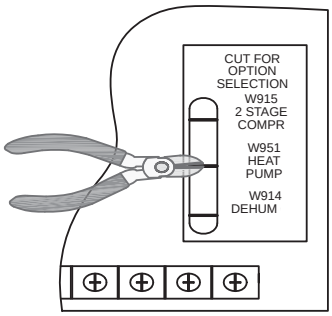	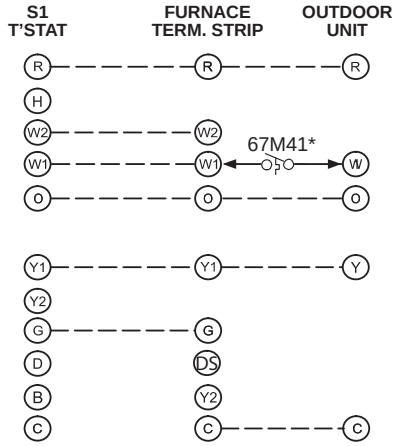
Dual Fuel Two Stage Heat Pump Thermostat w/ dual fuel capabilities Capable of 2 stage gas heat control	OFF	CUT ON-BOARD LINK W915 2 STAGE COMPR CUT ON-BOARD LINK W951 HEAT PUMP 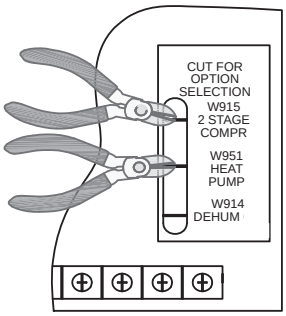	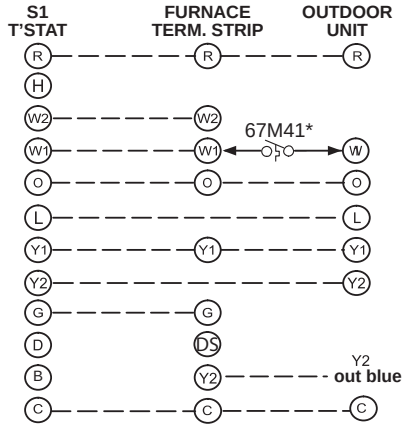

Service Information

Thermostat	DIP Switch Settings and On-Board Links		Wiring Connections
	DIP Switch 1 Thermostat Heating Stages	On Board Links Must Be Cut To Select System Options	
Dual Fuel Single Stage Heat Pump Thermostat w/ dual fuel capabilities Capable of 2 stage gas heat control w/ dehumidification control	OFF	CUT ON-BOARD LINK W951 HEAT PUMP CUT ON-BOARD LINK W914 DEHUM	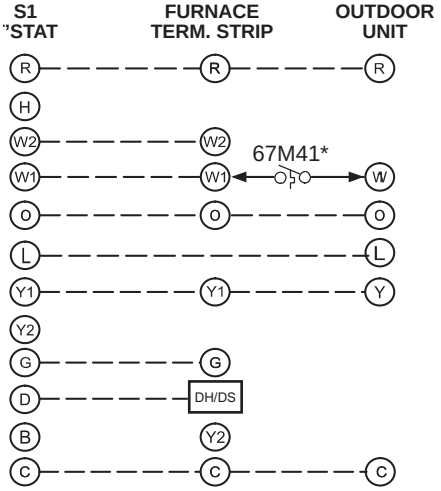
Dual Fuel Two Stage Heat Pump Thermostat w/ dual fuel capabilities Capable of 2 stage gas heat control w/ dehumidification control	OFF	CUT ON-BOARD LINK W915 2 STAGE COMPR CUT ON-BOARD LINK W951 HEAT PUMP CUT ON-BOARD LINK W914 DEHUM	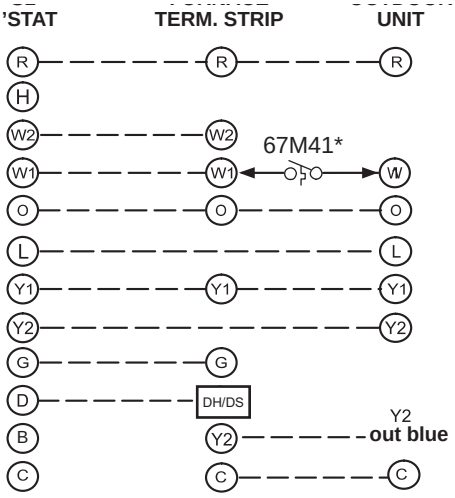

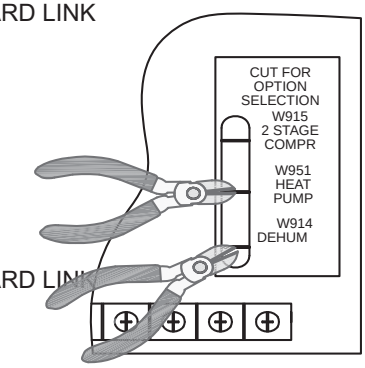

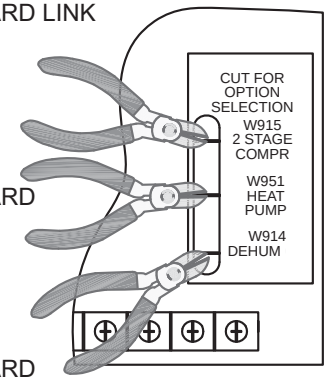

* Connect W1 to W1 ONLY if using defrost tempering kit 67M41

NOTE: DO NOT make a wire connection between the room thermostat L terminal and the L terminal of the furnace integrated control.

TROUBLESHOOTING - Heating Sequence of Operation

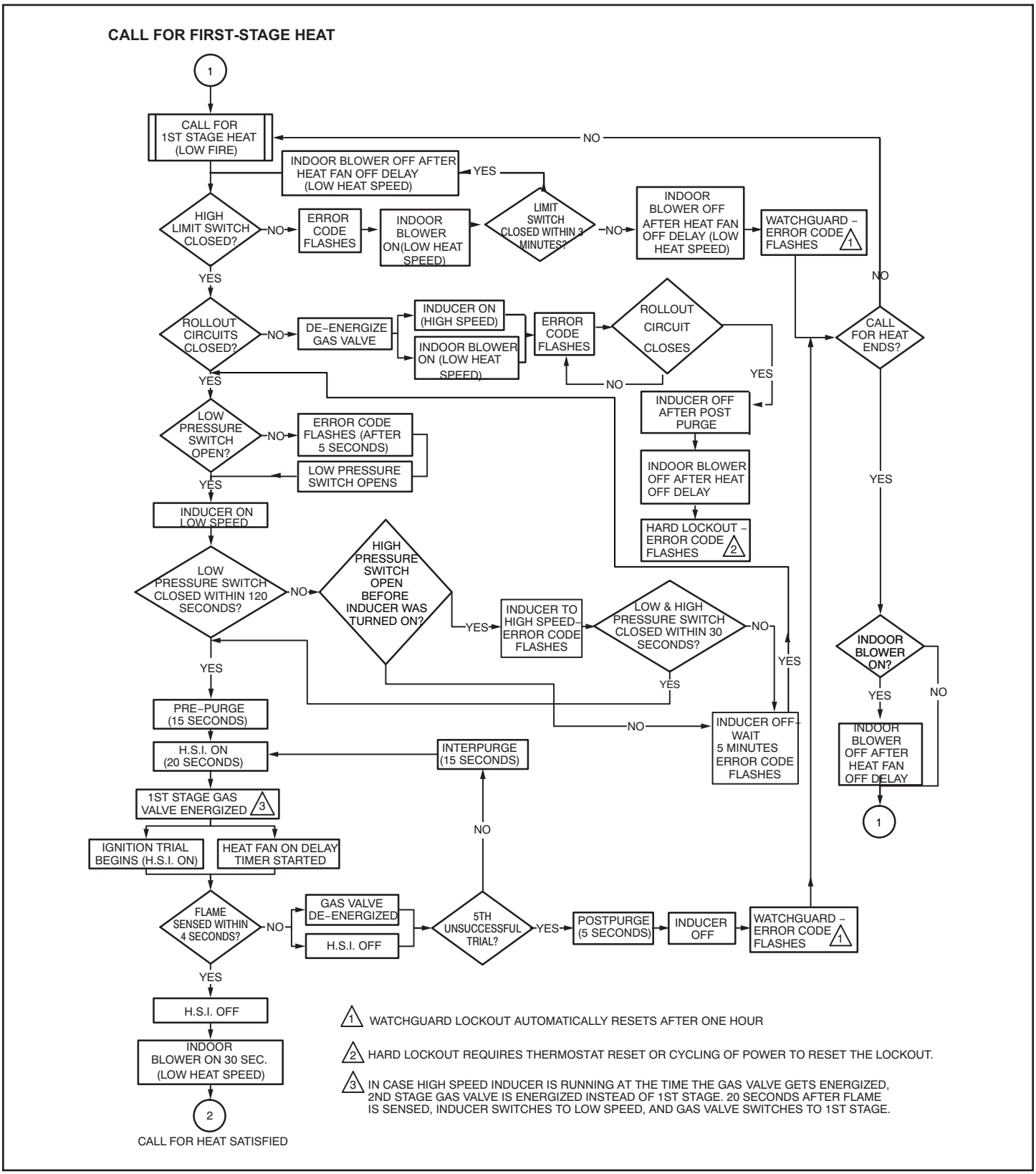

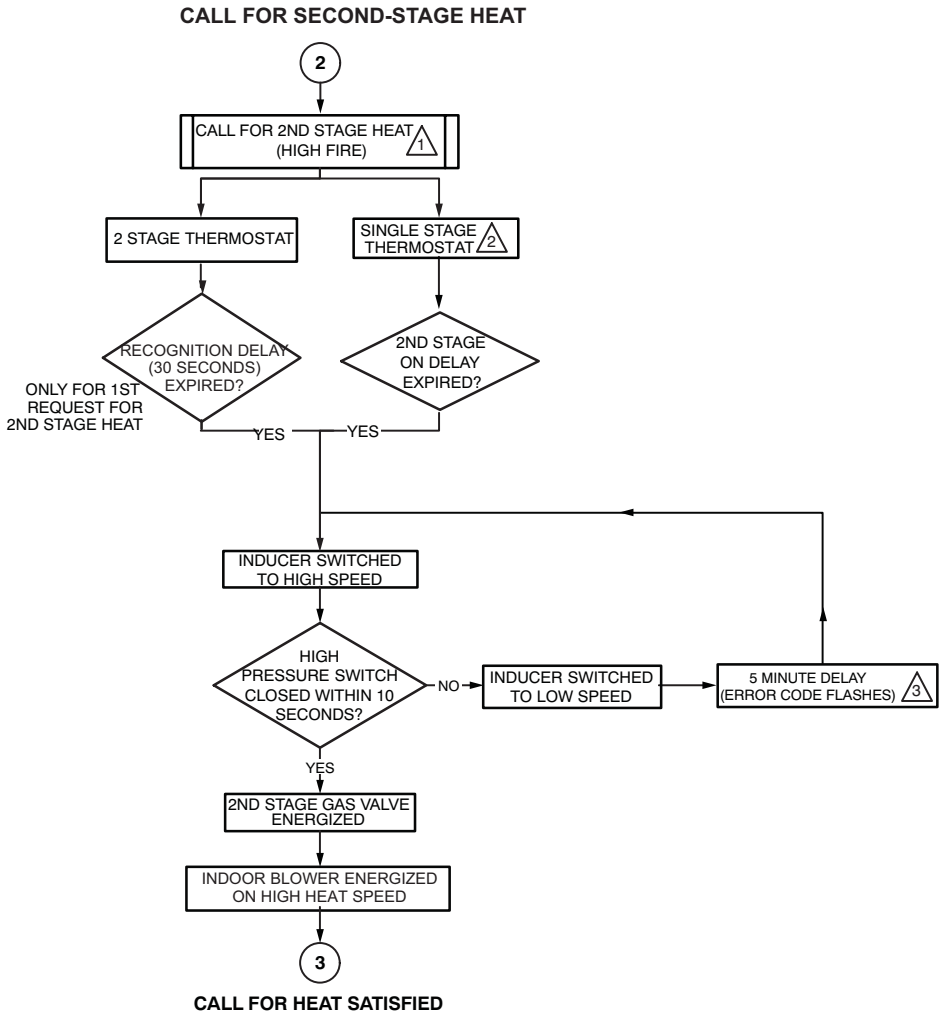

1 SYSTEM WILL ALWAYS LIGHT ON LOW FIIRE, EVEN IF 2ND STAGE HEAT IS IN PLACE.

2 WHEN USED WITH A SINGLE STAGE THERMOSTAT, SET SW1 TO THE ON POSITION IN DIP SWITCH S4.

3 IF THE HIGH FIRE PRESSURE SWITCH DOES NOT CLOSE WITHIN 5 ATTEMPTS, THE SYSTEM WILL OPERATE AT LOW FIRE FOR THE REMAINDER OF THE CALL FOR HEAT REQUEST.

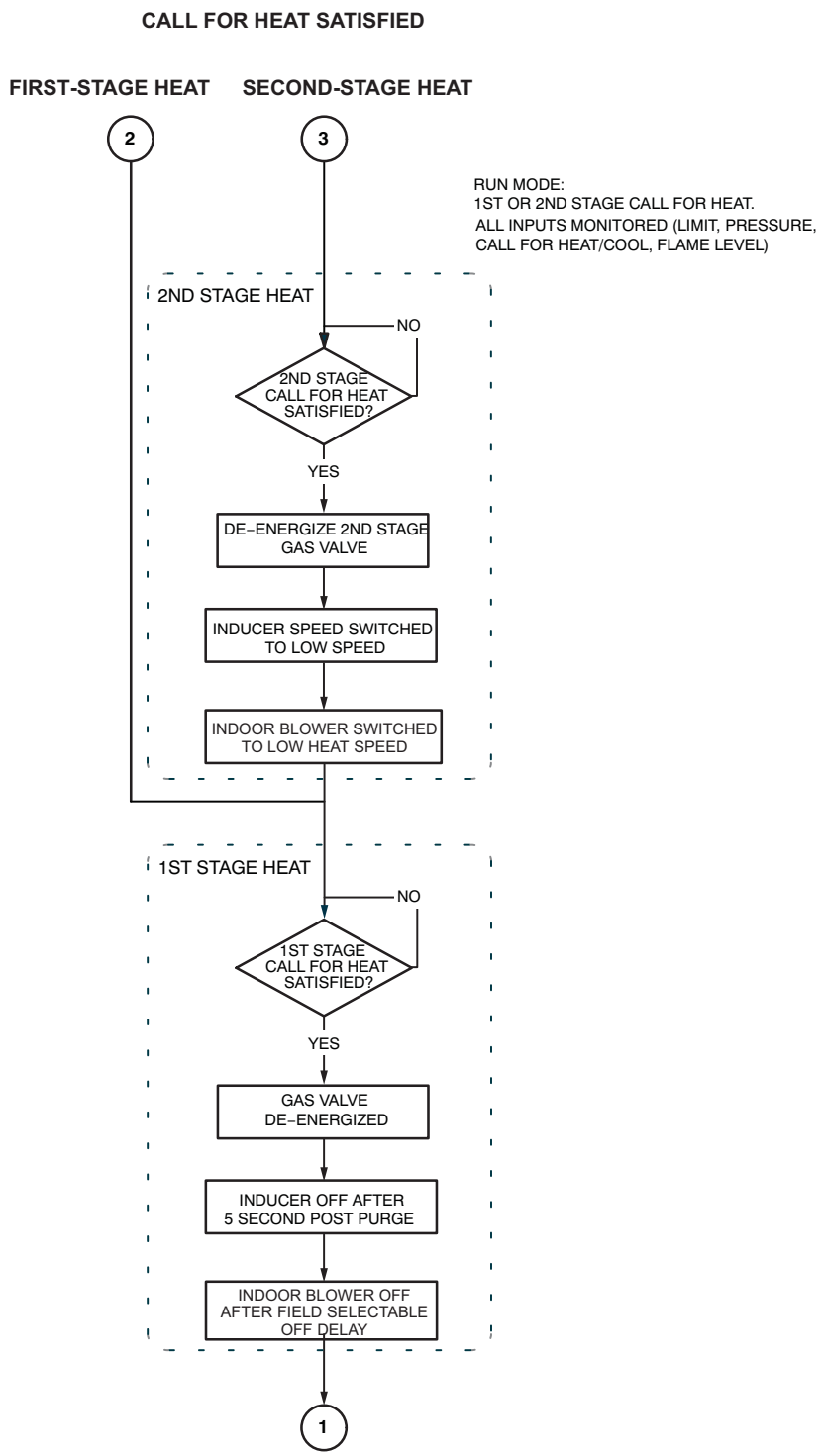
CALL FOR HEAT SATISFIED
FIRST-STAGE HEAT
SECOND-STAGE HEAT
2
3
RUN MODE:
1ST OR 2ND STAGE CALL FOR HEAT.
ALL INPUTS MONITORED (LIMIT, PRESSURE, CALL FOR HEAT/COOL, FLAME LEVEL)
2ND STAGE HEAT
NO
2ND STAGE CALL FOR HEAT SATISFIED?
YES
DE–ENERGIZE 2ND STAGE GAS VALVE
INDUCER SPEED SWITCHED TO LOW SPEED
INDOOR BLOWER SWITCHED TO LOW HEAT SPEED
1ST STAGE HEAT
NO
1ST STAGE CALL FOR HEAT SATISFIED?
YES
GAS VALVE DE–ENERGIZED
INDUCER OFF AFTER 5 SECOND POST PURGE
INDOOR BLOWER OFF AFTER FIELD SELECTABLE OFF DELAY
1

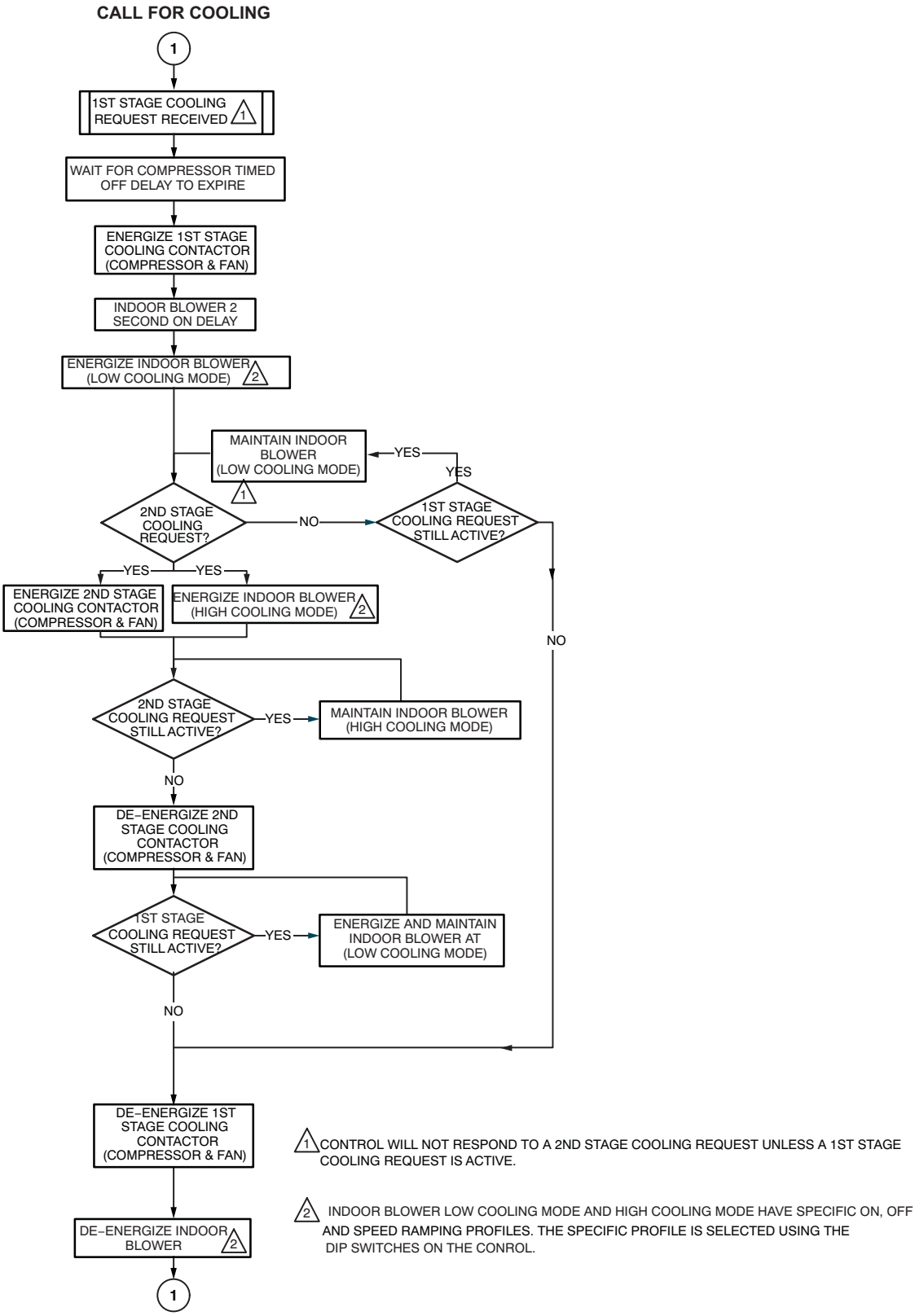
CALL FOR COOLING
1
1ST STAGE COOLING REQUEST RECEIVED 1
WAIT FOR COMPRESSOR TIMED OFF DELAY TO EXPIRE
ENERGIZE 1ST STAGE COOLING CONTACTOR (COMPRESSOR & FAN)
INDOOR BLOWER 2 SECOND ON DELAY
ENERGIZE INDOOR BLOWER (LOW COOLING MODE) 2
MAINTAIN INDOOR BLOWER (LOW COOLING MODE) 1
YES
YES
2ND STAGE COOLING REQUEST?
NO
1ST STAGE COOLING REQUEST STILL ACTIVE?
YES
YES
ENERGIZE 2ND STAGE COOLING CONTACTOR (COMPRESSOR & FAN)
ENERGIZE INDOOR BLOWER (HIGH COOLING MODE) 2
NO
2ND STAGE COOLING REQUEST STILL ACTIVE?
YES
MAINTAIN INDOOR BLOWER (HIGH COOLING MODE)
NO
DE–ENERGIZE 2ND STAGE COOLING CONTACTOR (COMPRESSOR & FAN)
1ST STAGE COOLING REQUEST STILL ACTIVE?
YES
ENERGIZE AND MAINTAIN INDOOR BLOWER AT (LOW COOLING MODE)
NO
DE–ENERGIZE 1ST STAGE COOLING CONTACTOR (COMPRESSOR & FAN)
DE–ENERGIZE INDOOR BLOWER 2
1
1 CONTROL WILL NOT RESPOND TO A 2ND STAGE COOLING REQUEST UNLESS A 1ST STAGE COOLING REQUEST IS ACTIVE.
2 INDOOR BLOWER LOW COOLING MODE AND HIGH COOLING MODE HAVE SPECIFIC ON, OFF AND SPEED RAMPING PROFILES. THE SPECIFIC PROFILE IS SELECTED USING THE DIP SWITCHES ON THE CONROL.

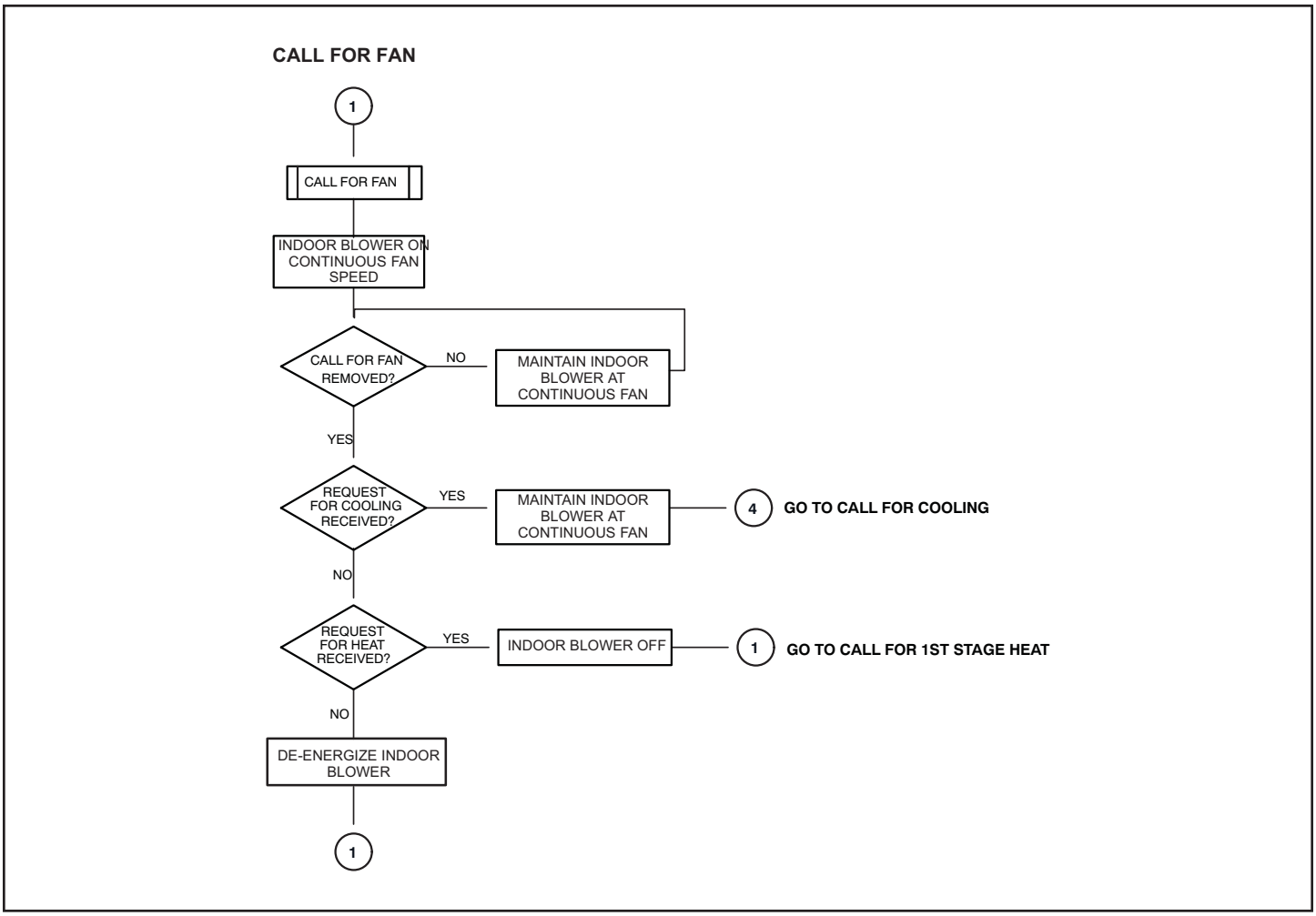
CALL FOR FAN
1
CALL FOR FAN
INDOOR BLOWER ON CONTINUOUS FAN SPEED
CALL FOR FAN REMOVED?
NO
MAINTAIN INDOOR BLOWER AT CONTINUOUS FAN
YES
REQUEST FOR COOLING RECEIVED?
YES
MAINTAIN INDOOR BLOWER AT CONTINUOUS FAN
4
GO TO CALL FOR COOLING
NO
REQUEST FOR HEAT RECEIVED?
YES
INDOOR BLOWER OFF
1
GO TO CALL FOR 1ST STAGE HEAT
NO
DE-ENERGIZE INDOOR BLOWER
1

X-PROGRAM UNIT CAPACITY MODE

Power-Up - Number displayed represents by integrated control unit size code (furnace model and capacity). If three horizontal bars are displayed followed by continuous E203, furnace control does not recognize **unit size code.** Configure per the following:

Furnace control in **IDLE** mode No heating, cooling or indoor fan operation)

Yes

To enter **Program Unit Capacity/Size:** push and hold button next to 7-segment LED display until **solid "P"** symbol appears. Release button.

***IMPORTANT**: Field replacement controls may need to be manually configured to validate furnace unit size code.*

Solid **P** starts blinking on 7-Segment LED

Push and hold button. Integrated control will display unit size code number for each furnace model for three seconds.

No

Turn room thermostat to **OFF**

UNIT SIZE CODE	FURNACE MODEL
A	NF80X060V3AR
B	NF80X080V4BR
C	NF80X100V5CR

When the correct unit size code is displayed, release button. Selected code will flash for 10-second period. During that period, press and hold push button for 5 seconds. Integrated control will store code in memory and will automatically exit **Program Unit Capacity/Size Mode** and reset. (If second period expires or push button is held less than five seconds, control will automatically exit **Program Capacity/Size Mode** and go into **IDLE** mode without storing unit size code. If this happens, programming function must be repeated).

Verify that the selected unit size code is correct and stored in non-volatile memory by cycling the 24 volt power to the furnace control. (At 24 volt power-up of the furnace control, the 7-segment LED will display a unit size code. If three horizontal bars display, board does not recognize unit size code. Programming function must be repeated)

FINISHED

GE APPLIANCES

All specifications and illustrations subject to change without notice and without incurring obligations.

Printed in the U.S.A.