AUTOMATIC ICE MAKER INSTALLATION INSTRUCTIONS

An authorized service technician is recommended to install the ice maker kit.

WARNING

- To avoid electric shock, which can cause death or severe personal injury, disconnect the refrigerator from electrical power before connecting a water supply line to the refrigerator.
- Connect the ice maker to a potable water supply only.

NOTE

Check with your local building authority for recommendations on water lines and associated materials prior to installing your new refrigerator. For household water line hookup from the home water supply system to the unit, Frigidaire recommends for homes with existing valves its **Smart Choice**® water line kit 5304437642 (with a 6′ Stainless Steel Water Line) and for homes without an existing valve, Frigidaire recommends its **Smart Choice**® water line kit 5304493869 (with a 6′ Polyline Waterline). Please refer to Frigidaire.com for more information.

Tools Needed:	
• Flat head screw driver	• Phillips or Quadrex driver
• ¼″ Hex driver	• Gloves
• Drill	• Needle nose pliers

NSF/ANSI/CAN 61: Q ≤ 1

Ice Maker (IM117000) Kit Components

Parts needed for install inside the unit

5304525288
Shoulder Screw
QTY: 5

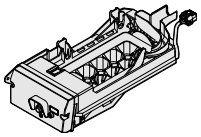

5304520536
Ice Maker
QTY: 1

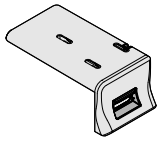

5304520538/5304520539
Cover with Door
QTY: 1

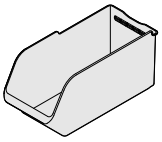

5304520535
Ice Bin
QTY: 1

5304520537
Bracket (30″ only)
QTY: 1

Parts needed for install on back side of the unit

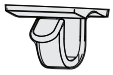

218515401
Hose and
Harness Clip
(30″ only)
QTY: 3

241500304
#8 screw
QTY: 2

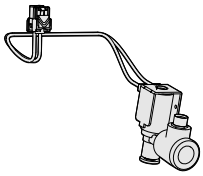

5304520540
Water Valve
QTY: 1

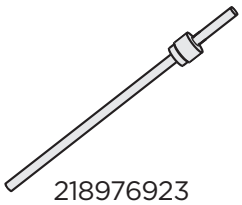

218976923
Tube
QTY: 1

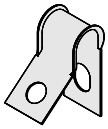

5304455846
Clamp ¼″
QTY: 1

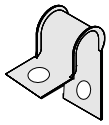

5303001193
Clamp ½″
QTY: 1

Service P/N: 5304520541
P/N: A13109107
(6/2023)

Ice Maker Installation Instructions

1. Unplug refrigerator from electrical outlet.
2. Lift the freezer shelf up and out. Set aside. See Figure 1.

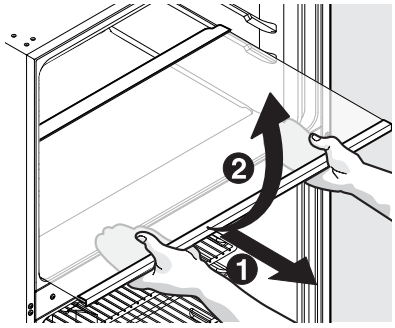

Figure 1

3. Remove water inlet and electrical cover, located on the inside of the unit, by inserting a flathead screwdriver on left side of opening in the small cover. Push to the right to disengage the snap. See Figure 2.

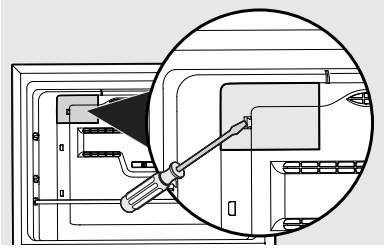

Figure 2

4. Locate dimples in the freezer liner for screw placement (a flashlight may help). Align the shoulder screws with the dimples. Push the screws to penetrate the freezer liner and drive the screws in until they are tight against the liner. Use 2 screws on the left side wall, and 3 on the top of the liner. See Figure 3.

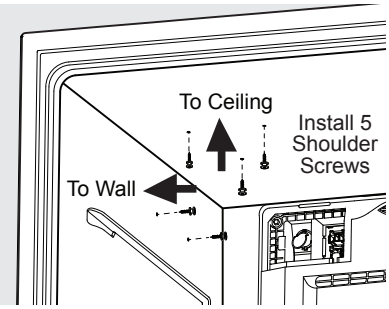

Figure 3

5. For a **30″ wide refrigerator** install the bracket onto the ice maker. The Ice maker will slide onto the mounting features on the bracket and snap into place. The locking feature is located on the rear of the ice maker.

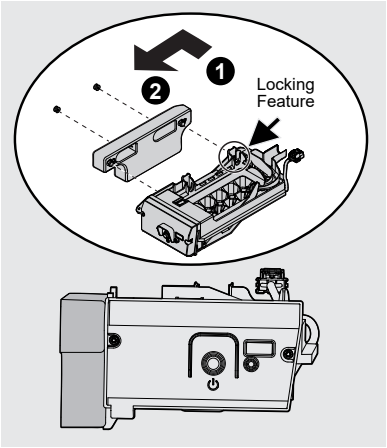

30″ wide refrigerator
Use the bracket with the ice maker

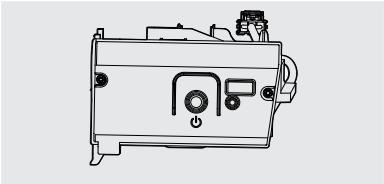

28″ wide refrigerator
Use the ice maker only

6. Plug the ice maker in the electrical connector on the back wall. Once connected, do not allow the ice maker to hang unsupported. See Figure 4.

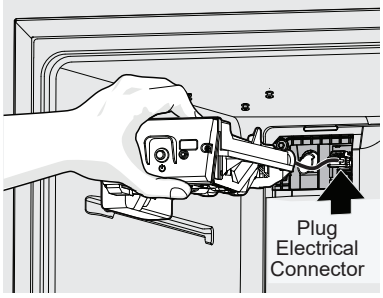

Figure 4

7. Slide the ice maker onto the 2 side wall shoulder screws. See Figure 5A.
   Make sure the ice maker water channel is under the water fill tube, continue to slide until the ice maker snaps into place. See Figure 5B.

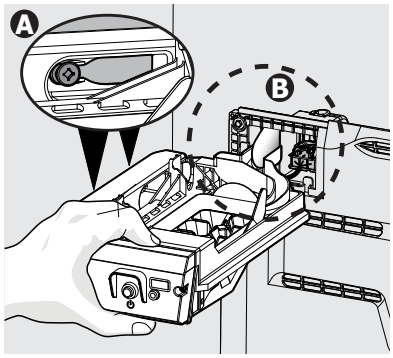

Figure 5

8. Install the plastic shutter into the window in the front of the cover. The shutter snaps into the clips on inside face of the cover, no tools are required. Slide the ice maker cover onto the shoulder screws on top of the unit until it locks into place with a snap. See Figure 6.

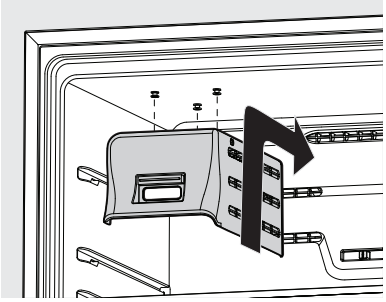

Figure 6

9. To install the ice bin, the freezer shelf needs to be in the lowest position. Slide the ice bin between the side wall and the right side of the ice maker housing positioned on the shelf. See Figure 7.

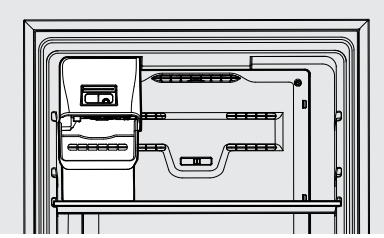

Figure 7

10. Locate the Ice maker installation label on the rear outside right top corner of the refrigerator. Cut the label on the dashed lines, and push flaps inward until they stick to the unit. See Figure 8.

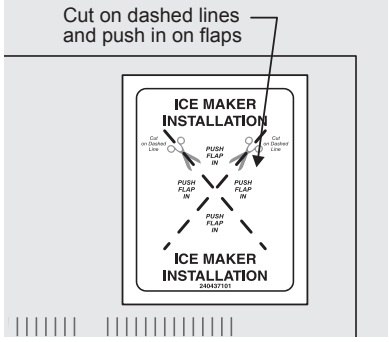

Figure 8

11. Install the water line by screwing the nut on the end of the tube onto the water inlet. Tighten the nut until snug, and then tighten an additional ¼ turn with needle nose pliers. (See Figure 9A.)
12. Install the 2 water line clips on the unit evenly spaced inside the depressed area located under the water inlet. Insert the water line tube into the clips. (See Figure 9B.)

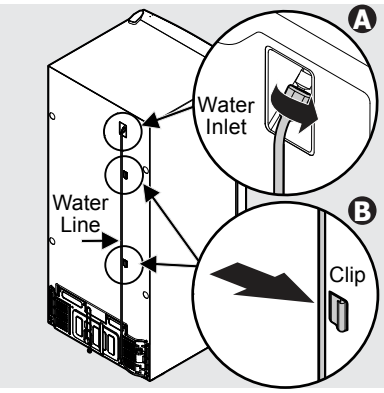

Figure 9

***If you have a unit with an access cover, continue to page 4 for additional installation instructions. For a unit without an access cover, continue to page 5.**

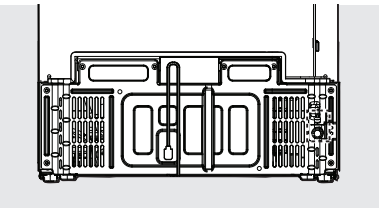

Units with access cover

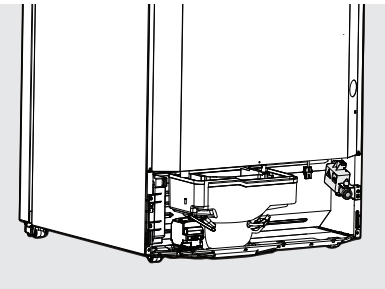

Units without access cover

Ice Maker Installation Instructions (with access cover)

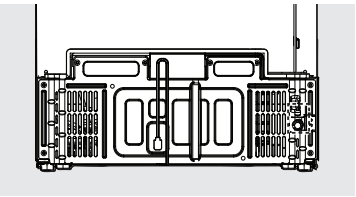

CAUTION

Wear gloves and use extreme CAUTION when handling the access cover.

13. Remove 8 screws from access cover located at the bottom rear outside of the unit. Set aside. See Figure 10.

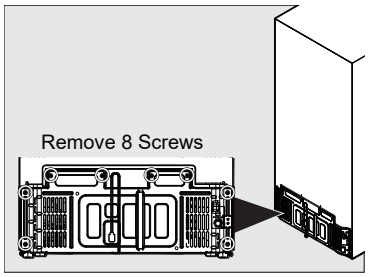

Figure 10

14. Place the green water tube to the icemaker into the bottom outlet of the water valve. You must push the tube into the valve until it is fully seated in place. Check to make sure you installed the tube correctly by gently pulling to make sure it does not come out.

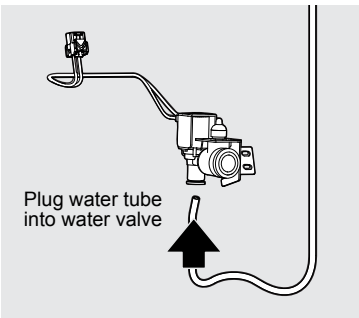

Figure 11

15. The water valve location has pre-made holes on the right rear of the unit. The water line should be oriented downward when the valve is installed. Install the water valve using a ¼″ hex head driver, install the 2 hex head screws. Tighten screws until they are snug and then tighten an additional ¼ turn. See Figure 12.

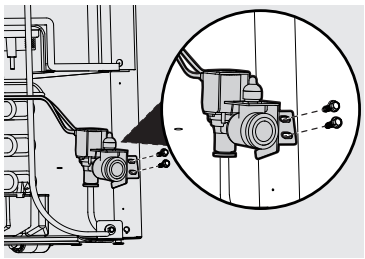

Figure 12

16. Plug the connector on the water valve wire harness into the connector above the condenser coil. You will hear a click when it is fully seated in place. Install the water valve clip at the bottom right side of the unit, and route and attach the water valve harness into the clip. See Figure 13.

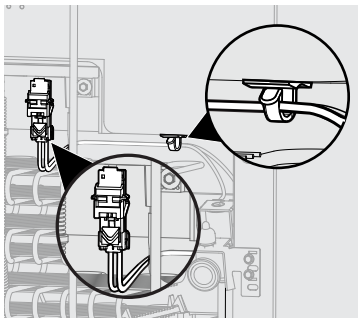

Figure 13

17. Reinstall the access cover by hooking cover onto the bottom flange of the cabinet, and then tilt the cover upward to align with the screw locations on the cabinet. Install the screws starting with the 2 on the left side, then the right side , finish with the center screws. See Figure 14.

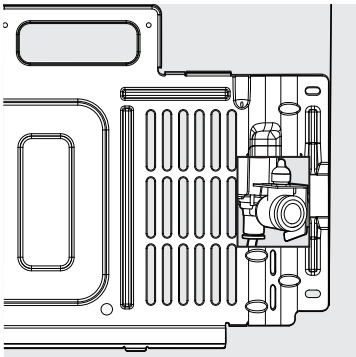

Figure 14

NOTE

Ensure power cord is aligned with the notch at the bottom of the access cover and the water line is located inside the notch at the top right of the cover.

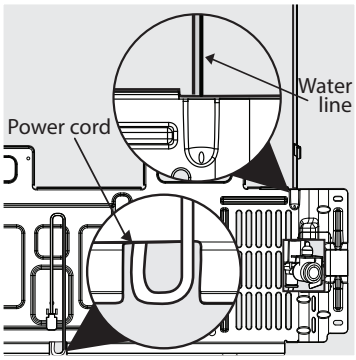

18. Connect the household water line to the water valve. Follow instructions in **Connecting Ice Maker to Water Supply**.

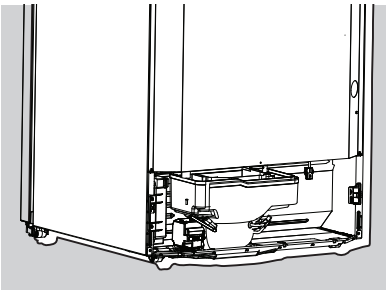

19. Remove the connector box from the unit with a Philips screwdriver. Discard screw. See Figure 15.

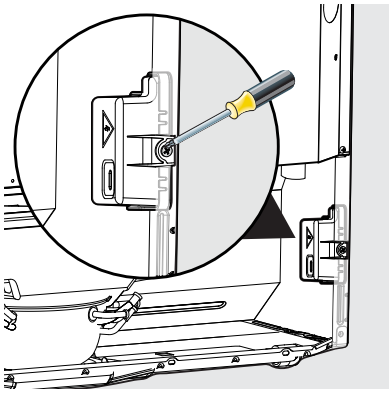

Figure 15

20. Open the connector box using a flat head screwdriver. Insert at the notched point and turn. Insert the water valve in the hole in the box. See Figure 16.

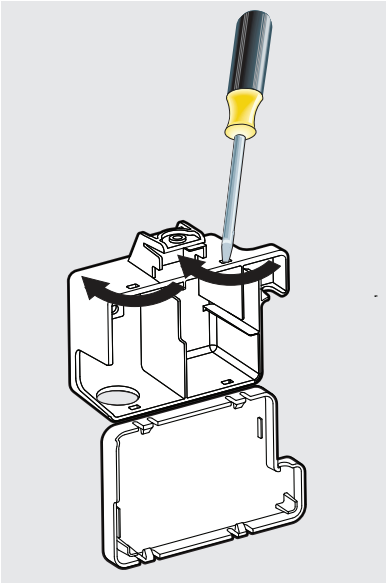

Figure 16

21. Connect the valve wire harness with the white connector from the unit. Insert the wiring in the box as shown. Close the box cover completely, ensuring all wiring is inside. See Figure 17.

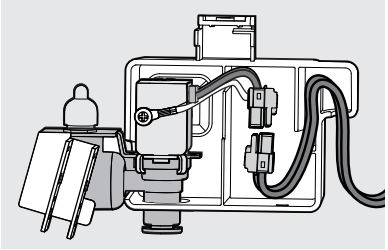

Figure 17

22. Plug the green water tube from the icemaker into the bottom outlet of the water valve. The tube should be pushed into the valve up to the black line marked on the tube. See Figure 18.

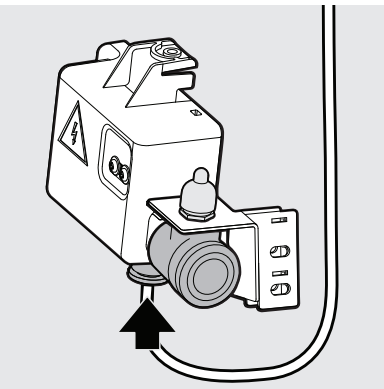

Figure 18

23. Attach the water valve bracket to the unit at the 2 pre-made holes using the 2 screws included in the kit. See Figure 19.

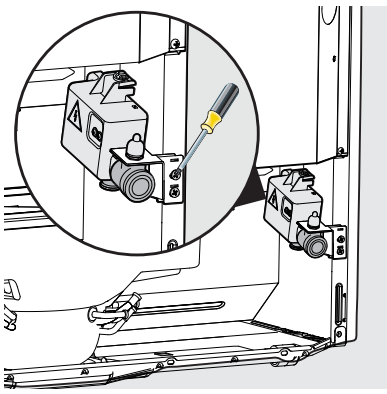

Figure 19

24. Connect the household water line to the water valve fitting (pointed up). Follow instructions in **Connecting Ice Maker to Water Supply**.

Connecting Ice Maker to Water Supply

WARNING

To avoid electric shock, which can cause death or severe personal injury, disconnect the refrigerator from electrical power before connecting a water supply line to the refrigerator.

CAUTION

To Avoid Property Damage:

- Stainless Steel braided tubing is recommended for the water supply line. Water supply tubing made of ¼″ plastic is not recommended to be used. Plastic tubing greatly increases the potential for water leaks, and the manufacturer will not be responsible for any damage.
- DO NOT install water supply tubing in areas where temperatures fall below freezing.
- Chemicals from a malfunctioning softener can damage the ice maker. If the ice maker is connected to soft water, ensure that the softener is maintained and working properly.

IMPORTANT

Ensure that your water supply line connections comply with all local plumbing codes.

Before Installing The Water Supply Line, You Will Need:

- Basic Tools: adjustable wrench, flat blade screwdriver, and Phillips screwdriver
- Access to a household cold water line with water pressure between 30 and 100 psi.
- A water supply line preferably made of Braided Stainless Steel or Braided Poly with integral fittings for connection to the refrigerator and the valve at the wall. If the home has a ¼″ copper line, and the owner prefers to keep the copper line, a compression fitting ferrule (sleeve) and nut should be replaced each time the fitting is reused.

NOTE

Check with your local building authority for recommendations on water lines and associated materials prior to installing your new refrigerator. Depending on your local/state building codes, Frigidaire recommends for homes with existing valves its **Smart Choice**® water line kit 5304437642 (with a 6′ Stainless Steel Water Line) and for homes without an existing valve, Frigidaire recommends its **Smart Choice**® water line kit 5304493869 (with a 6′ Polyline Waterline). Please refer to Frigidaire.com.

NOTE

Water lines should be long enough to all ow the refrigerator to roll forward for cleaning or service. Typically, 6′. length works well for braided Stainless or Poly kits. A ¼″ copper line should be longer to coil extra length behind the refrigerator so movement will not kink the copper line.

Connecting Ice Maker to Water Supply

To Connect Water Supply Line To Ice Maker Inlet Valve

1. Disconnect refrigerator from an electrical power source.
2. Place the end of water supply line into the sink or a bucket. Turn ON the water supply and flush the supply line until the water is clear. Turn OFF the water supply at the shutoff valve.
3. Remove the plastic cap from water valve inlet and discard the cap.
4. **If you use copper tubing**, slide the brass compression nut and then ferrule (sleeve) onto the water supply line. Push the water supply line into the water valve inlet as far as it will go (¼" / 6.4 mm). Slide the ferrule (sleeve) into the valve inlet and finger tighten the compression nut onto the valve. Tighten another ½ turn with a wrench; DO NOT overtighten. See below.

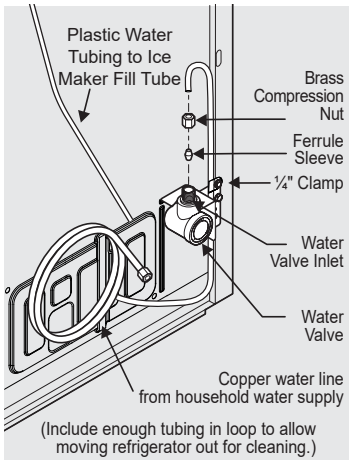

Units with access cover

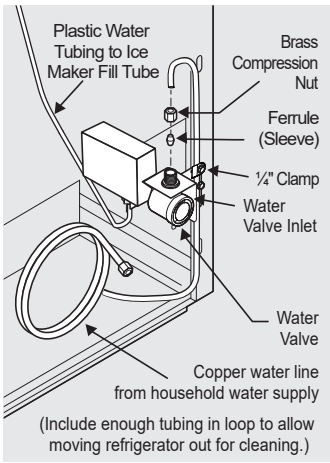

Units without access cover

5. Secure the copper line to the clamp (as shown), using the existing screw.

If you use braided flexible stainless steel tubing, the nut is already assembled on the tubing. Slide the nut onto the valve inlet and finger tighten the nut onto the valve. Tighten another ½ turn with a wrench; DO NOT overtighten. See below.

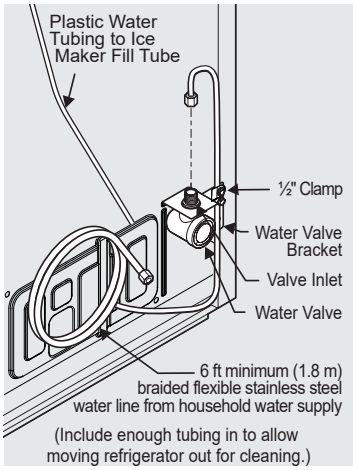

Units with access cover

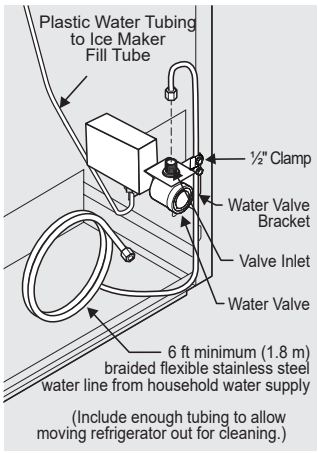

Units without access cover

6. With the steel clamp and the screw, secure the water supply line to the rear panel of the refrigerator as shown.
7. To turn the ice maker on, press the ice maker's On/Off power switch so the LED is steadily illuminated.

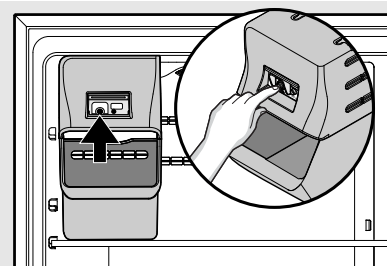

8. Turn ON the water supply at the shutoff valve and tighten any connections that leak.
9. Reconnect the refrigerator to an electrical power source.

Ice Service

If your refrigerator has an automatic ice maker, minimal ice will be produced during the first 24 hours of operation. Air in new plumbing lines may cause the ice maker to cycle 2 or 3 times before making a full tray of ice. With no usage, it will take approximately 1 to 2 days to fill the ice bin.

New plumbing connections may cause the first production of ice cubes to be discolored or have an odd flavor. Discard ice made during the first 24 hours.

Turning Your Ice Maker On

After the plumbing connections have been completed, the water supply valve must be opened. Place the ice bin under the ice maker, pushing it as far back as possible. Press the ice maker's On/Off ⏻ button. The button will illuminate in green when the ice maker is On.

Turning Your Ice Maker Off

To stop the ice maker, press the ice maker's On/Off ⏻ button. The ice maker also stops producing ice automatically when the bin is full, and then it resumes when the level in the bin drops.

IMPORTANT

To ensure proper function for your ice maker, hook up water supply immediately or turn ice maker OFF. If the ice maker is on and the water supply is not connected, the water valve can make a loud chattering noise.

Ice Production: What To Expect

The ice maker will produce about 2 pounds of ice every 24 hours depending on usage conditions.
Note: You can make more ice by setting the freezer to a colder setting. Ice is produced at a rate of 10 cubes every 100 to 160 minutes.

CAUTION

Do Not place the ice container in your dishwasher.

Ice Maker Tips

Remember that water quality determines your ice quality. If the water source uses a water softener, ensure that the softener is maintained and working properly. Chemicals from a malfunctioning softener can damage the ice maker.

CAUTION

Do Not place the ice container in your dishwasher.

- Wash ice container in warm water with mild detergent. Rinse well and dry.
- Stop the ice maker when cleaning the freezer or for short vacations.
- If the ice maker will be turned off for a long period of time, turn the water supply valve to the closed position.