30" OUTDOOR GAS GRILL - COMBUSTIBLE INSTALLATION

OG30



FEATURES

Two individually contained 25,000 Btu grill burners deliver exceptional high to low control

Have it built-in or make it a free-standing cart

Gain nuanced control and more taste from the direct and radiant heat provided by ceramic briquettes

Designed with a stainless-steel cover

Grill any time of day with LED-lit signature Wolf red control knobs

The two position rotisserie handles dishes large and small with a 14,000 Btu infrared burner

Resists the elements with its heavy-duty, all-weather stainless-steel construction

Using our easy-open, double-wall hood provides more heat for more efficient grilling

Illuminates your grilling surface with two powerful halogen lights

Eliminates the need for a pilot light with electric hot surface ignitors

ACCESSORIES

30" Black Knobs

30" Grill Liner

Built-In Cover

Cart Cover

Combo Door and Drawer

Double Storage Drawer

Griddle Plate

LP Regulator Kit

Outdoor Grill Cart (Limited Availability)

Paper Towel Drawer

Rotisserie Conversion

Single Drawer Storage

Triple Storage Drawer

Trash/Recycling Drawers

Access Doors

Dry Storage

Accessories available through an authorized dealer.
For local dealer information, visit subzero-wolf.com/locator.

KNOB OPTIONS



GRILL SPECIFICATIONS

- Halogen lighting
- External reading thermometer
- Rotisserie
- 2 removable stainless steel burner grate; 1 warming rack
- Removable drip tray

Specifications are subject to change without notice. This information was generated on July 5, 2026. Verify specifications prior to finalizing your cabinetry/enclosures.

30" OUTDOOR GAS GRILL - COMBUSTIBLE INSTALLATION

PRODUCT SPECIFICATIONS

Model	OG30
Dimensions	30"W x 27"H x 30"D
Weight	220 lbs
Electrical Supply	120 VAC, 60 Hz
Electrical Service	15 amp dedicated circuit
Gas Supply	3/4" ID line
Gas Inlet	1/2" NPT
Power Cord Length	5 Feet
Receptacle	3-prong grounding-type

ELECTRICAL

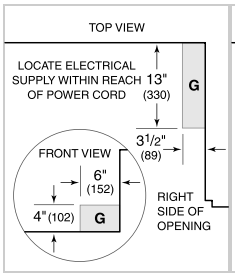

PLUMBING

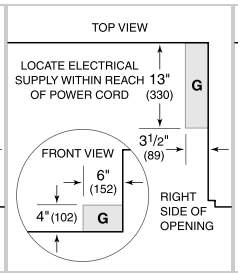

GAS

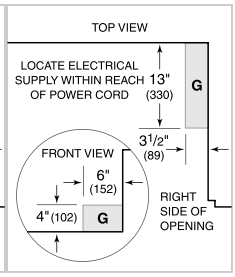

NOTE: Dimensions in parenthesis are in millimeters unless otherwise specified

DIMENSIONS

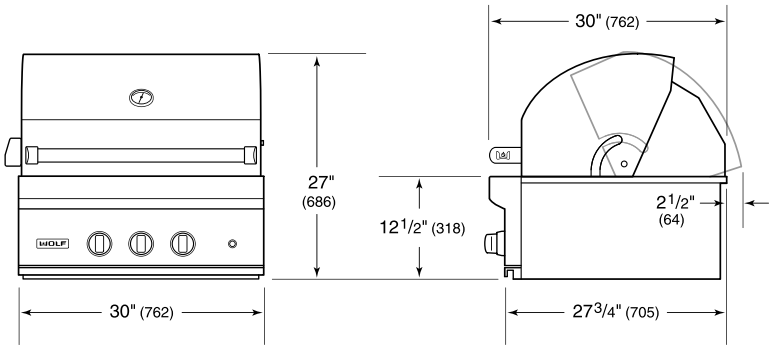

COMBUSTIBLE INSTALLATION

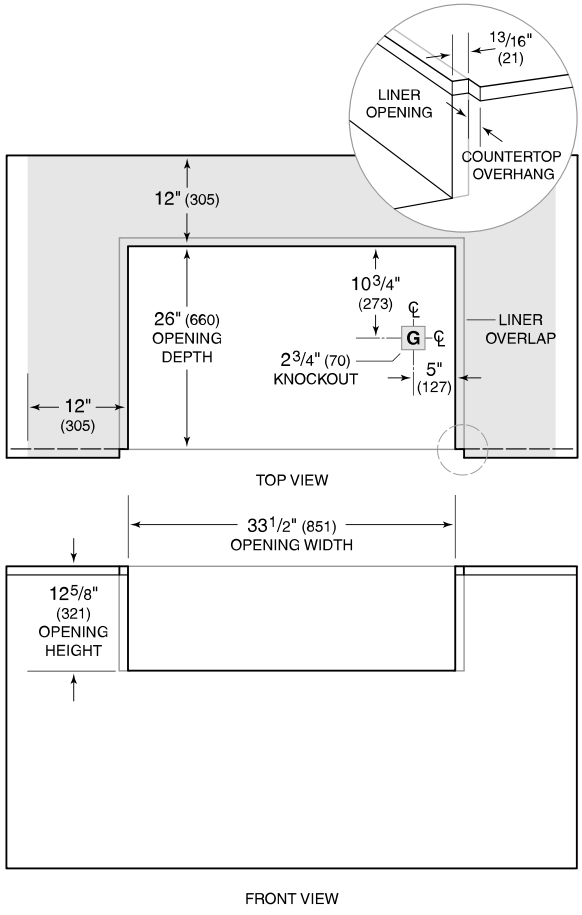

NOTE: Shaded area above countertop indicates minimum clearance to combustible surfaces, combustible materials cannot be located within this area.

Specifications are subject to change without notice. This information was generated on July 5, 2026. Verify specifications prior to finalizing your cabinetry/enclosures.