User's Guide

for Dryers

Original Instructions
Keep These Instructions for Future Reference.
CAUTION: Read the instructions before using the machine.
(If this machine changes ownership, this manual must accompany machine.)

Alliance™ Laundry Systems

www.alliancelaundry.com

Part No. D514472ENR4
February 2019

WARNING

WARNING

Risk of fire. Highly flammable material.

W881

Read all instructions before using unit.

WARNING

FOR YOUR SAFETY, the information in this manual must be followed to minimize the risk of fire or explosion or to prevent property damage, personal injury or death.

W033

WARNING

- Do not store or use gasoline or other flammable vapors and liquids in the vicinity of this or any other appliance.
- WHAT TO DO IF YOU SMELL GAS:
  - Do not try to light any appliance.
  - Do not touch any electrical switch; do not use any phone in your building.
  - Clear the room, building or area of all occupants.
  - Immediately call your gas supplier from a neighbor's phone. Follow the gas supplier's instructions.
  - If you cannot reach your gas supplier, call the fire department.
- Installation and service must be performed by a qualified installer, service agency or the gas supplier.

W052

IMPORTANT: Purchaser must consult the local gas supplier for suggested instructions to be followed if the dryer user smells gas. The gas utility instructions plus the SAFETY and WARNING note directly above must be posted in a prominent location near the dryer for customer use.

WARNING

- Installation of unit must be performed by a qualified installer.
- Install clothes dryer according to manufacturer's instructions and local codes.
- DO NOT install a clothes dryer with flexible plastic venting materials. If flexible metal (foil type) duct is installed, it must be of a specific type identified by the appliance manufacturer as suitable for use with clothes dryers. Refer to section on connecting exhaust system. Flexible venting materials are known to collapse, be easily crushed, and trap lint. These conditions will obstruct clothes dryer airflow and increase the risk of fire.

W729R1

WARNING

To reduce the risk of severe injury or death, follow all installation instructions. Save these instructions.

W894

WARNING

FOR YOUR SAFETY

Do not store or use gasoline or other flammable vapors and liquids in the vicinity of this or any other appliance.

W053

This product uses FreeRTOS V7.2.0 (www.freertos.org).

© Copyright, Alliance Laundry Systems LLC - DO NOT COPY or TRANSMIT

The following information applies to the state of Massachusetts, USA.

- This appliance can only be installed by a Massachusetts licensed plumber or gas fitter.
- This appliance must be installed with a 36 inch [910 mm] long flexible gas connector.
- A "T-Handle" type gas shut-off valve must be installed in the gas supply line to this appliance.
- This appliance must not be installed in a bedroom or bathroom.

© Copyright, Alliance Laundry Systems LLC -
DO NOT COPY or TRANSMIT

Table of Contents

Safety Information 6
Explanation of Safety Messages 6
Important Safety Instructions 6

Before Drying 8
Energy Saving Tips 8
Helps and Hints 8
Sort 8
Load 8

Operating Your Dryer 10
Control Panel 10
Digital Display 10
Cycles 10
Selections 11
Options 11
Status 11
To Dry Clothes 11
Optional Drying Rack 12

Maintenance 13
Lubrication 13
Care of Your Dryer 13
Motor Overload Protector 13
Lint Filter 14

Troubleshooting 15
Contact Information 17

© Copyright 2019, Alliance Laundry Systems LLC
All rights reserved. No part of the contents of this book may be reproduced or transmitted in any form or by any means without the expressed written consent of the publisher.

Safety Information

Explanation of Safety Messages

Precautionary statements ("DANGER," "WARNING," and "CAUTION"), followed by specific instructions, are found in this manual and on machine decals. These precautions are intended for the personal safety of the operator, user, servicer, and those maintaining the machine.

DANGER

Indicates an imminently hazardous situation that, if not avoided, will cause severe personal injury or death.

WARNING

Indicates a hazardous situation that, if not avoided, could cause severe personal injury or death.

CAUTION

Indicates a hazardous situation that, if not avoided, may cause minor or moderate personal injury or property damage.

Additional precautionary statements ("IMPORTANT" and "NOTE") are followed by specific instructions.

IMPORTANT: The word "IMPORTANT" is used to inform the reader of specific procedures where minor machine damage will occur if the procedure is not followed.

NOTE: The word "NOTE" is used to communicate installation, operation, maintenance or servicing information that is important but not hazard related.

Important Safety Instructions

Save These Instructions

WARNING

To reduce the risk of fire, electric shock, serious injury or death to persons when using your dryer, follow these basic precautions:

W130

- Read all instructions before using the dryer.
- Install this dryer according to the INSTALLATION INSTRUCTIONS. Refer to the EARTH/GROUND INSTRUCTIONS in the INSTALLATION manual for the proper earth/ground connection of the dryer. All connections for electrical power, earth/ground and gas supply must comply with local codes and be made by licensed personnel when required. Do not do it yourself.
- Do not install or store the dryer where it will be exposed to water and/or weather.
- Do not dry articles that have been previously cleaned in, washed in, soaked in, or spotted with gasoline or machine oils, vegetable or cooking oils, cleaning waxes or chemicals, dry-cleaning solvents, thinner, anything containing chemicals such as in mops and cleaning cloths, or other flammable or explosive substances as they give off vapors that could ignite, explode or cause fabric to catch on fire by itself.
- Do not place items exposed to cooking oils in your dryer. Items contaminated with cooking oils may contribute to a chemical reaction that could cause a load to catch fire. To reduce the risk of fire due to contaminated loads, the final part of a tumble dryer cycle occurs without heat (cool down period). Avoid stopping a tumble dryer before the end of the drying cycle unless all items are quickly removed and spread out so that the heat is dissipated.
- Items that have been soiled with substances such as cooking oil, acetone, alcohol, petrol, kerosene, spot removers, turpentine, waxes and wax removers, should be washed in hot water with an extra amount of detergent before being dried in the tumble dryer.
- To reduce the risk of fire, DO NOT DRY plastics or articles containing foam or latex rubber or similarly textured rubberlike materials, such as shower caps, water proof textiles, rubber-backed articles, and clothes or pillows filled with foam rubber pads.
- Do not tumble fiberglass curtains and draperies unless the label says it can be done. If they are dried, wipe out the cylinder with a damp cloth to remove particles of fiberglass.
- Do not allow children to play on or in the dryer. Close supervision of children is necessary when the dryer is used near children. This appliance is not intended for use by persons (including children) with reduced physical, sensory or mental capabilities, or lack of experience and knowledge, unless they have been given supervision or instruction concerning the use of the appliance by a person responsible for their safety. This is a safety rule for all appliances.
- Cleaning and user maintenance shall not be made by children without supervision.
- Children less than three years should be kept away unless continuously supervised.
- Do not reach into the dryer if the cylinder is revolving.
- Use the dryer only for its intended purpose, drying clothes. ALWAYS follow the fabric care instructions supplied by the gar-

© Copyright, Alliance Laundry Systems LLC - DO NOT COPY or TRANSMIT

ment manufacturer and only use the dryer drum to dry textiles that have been washed in water.

- Always read and follow manufacturer's instructions on packages of laundry and cleaning aids. Heed all warnings or precautions. To reduce the risk of poisoning or chemical burns, keep them out of reach of children at all times (preferably in a locked cabinet).
- Do not use fabric softeners or products to eliminate static unless recommended by the manufacturer of the fabric softener or product.
- Remove laundry immediately after the dryer stops.
- DO NOT operate the dryer if it is smoking, grinding or has missing or broken parts or removed guards and/or panels. DO NOT tamper with the controls or bypass any safety devices.
- DO NOT operate individual units if they have been separated from a stack unit.
- Dryer will not operate with the loading door open. DO NOT bypass the door safety switch by permitting the dryer to operate with the door open. The dryer will stop tumbling when the door is opened. Do not use the dryer if it does not stop tumbling when the door is opened or starts tumbling without pressing the START mechanism. Remove the dryer from use and call the service person.
- ALWAYS clean the lint filter after every load. A layer of lint in the filter reduces drying efficiency and prolongs drying time. Keep area around the exhaust opening and adjacent surrounding area free from the accumulation of lint, dust and dirt. The interior of the dryer and the exhaust duct should be cleaned periodically by qualified service personnel.
- Do not repair or replace any part of the dryer, or attempt any servicing unless specifically recommended in the user-maintenance instructions or in published user-repair instructions that you understand and have the skills to carry out. ALWAYS disconnect the electrical power to the dryer before attempting service. Disconnect the power cord by grasping the plug, not the cord.
- Electric Models: If supply cord is damaged, it must be replaced by a special cord or assembly available from the manufacturer or its service agent.
- Gas Models: If supply cord is damaged, it must be replaced by the manufacturer, its service agent or similarly qualified persons in order to avoid a hazard.
- Before the dryer is removed from service or discarded, remove the door to the drying compartment.
- Failure to install, maintain, and/or operate this machine according to the manufacturer's instructions may result in conditions which can produce bodily injury and/or property damage.

NOTE: The WARNING and IMPORTANT SAFETY INSTRUCTIONS appearing in this manual are not meant to cover all possible conditions and situations that may occur. Observe and be aware of other labels and precautions that are located on the machine. They are intended to provide instruction for safe use of the machine. Common sense, caution and care must be exercised when installing, maintaining, or operating the dryer.

Always contact your dealer, distributor, service agent or the manufacturer about any problems or conditions you do not understand.

© Copyright, Alliance Laundry Systems LLC -
DO NOT COPY or TRANSMIT

Before Drying

Energy Saving Tips

- Make sure the lint filter is always clean.
- Do not overload the dryer.
- Do not overdry items.
- Remove items to be ironed while still damp.
- Large loads of similar fabrics dry the most efficiently. However, dry permanent press in smaller loads to prevent wrinkling.
- Use the correct cycle for the type of fabric being dried.
- Locate your dryer so the exhaust duct is as short and straight as possible.
- Do not open the door during the drying cycle.
- Plan to do your laundry on low humidity days; your clothes will dry faster.
- Dry multiple loads of clothes one right after another so dryer interior does not have to be reheated for each load.

Helps and Hints

WARNING

To reduce the risk of fire, explosion, serious injury or death, clothes which have traces of any flammable substances such as cooking oil, machine oil, flammable chemicals, thinner, etc. must not be put into the dryer.

W131

- The directions for installation and proper exhausting are given in the Installation Instructions which are included with the dryer.
- Static electricity may cause garments of synthetic fibers (as in lingerie) to cling together, especially if they are overdried. The use of a liquid fabric softener in the rinse water of the washer, or a fabric softener sheet in the dryer, will soften clothes and reduce static electricity.
- Do not wash or dry clothes that shed lint in the same load with permanent press or knit garments.
- Remove permanent press loads immediately after dryer stops.
- Follow the care labels on FLAME RETARDANT, SCOTCHGUARD™, etc., garments for proper washing and drying.
- If loads should be damp for ironing, use the Damp Dryness setting, in an Automatic cycle.

Sort

If you have correctly sorted the items for washing, they should be properly sorted for drying too.

1. Sort by color.
2. Separate lint shedding fabrics and lint receiving fabrics. Towels, flannels, chenille, cottons, rugs, etc., shed lint. Corduroys, knits (including socks), permanent press, and synthetics attract lint.
3. Separate no heat, low heat and high heat items.

In any kind of drying, lightweight fabrics will dry faster than heavyweight fabrics. If mixed loads are dried together (such as sheets and towels), remove the lighter weight fabrics when they are dry to prevent overdrying and wrinkling. The best method is to dry clothes which require the same time, temperature or dryness level in the same load.

Load

WARNING

Do not wash or dry items soiled with vegetable or cooking oils. Some oils may remain after washing and may cause the fabric to catch on fire by itself.

W527

- Do not overload your dryer. Bulk, not weight, determines the load size. If the dryer is overloaded, it could cause discoloration or permanent heat damage to the load.
- There should be space in the dryer for the clothes to tumble freely and help to reduce wrinkles.
- Large and small pieces together make up loads which will tumble well. Permanent press loads should be smaller to provide room for tumbling. Proper tumbling allows for fewer wrinkles.
- A load can be too small. Just a few small pieces will not tumble properly. They will take longer to dry and they may be wrinkled. For small loads, add a couple of large towels or non lint shedding items to aid in tumbling.
- The following illustrations show the ideal load sizes for fabrics. The average load will fill the cylinder one third to half full when wet.

© Copyright, Alliance Laundry Systems LLC - DO NOT COPY or TRANSMIT

Cylinder with wet linens and cottons

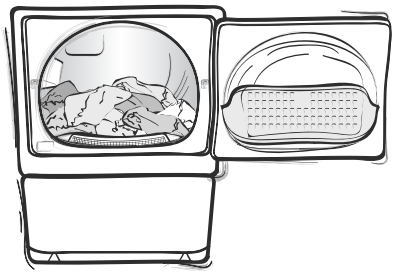

DRY2031N_SVG

Cylinder with wet permanent press items

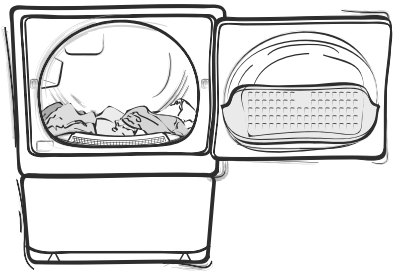

DRY2032N_SVG

© Copyright, Alliance Laundry Systems LLC -
DO NOT COPY or TRANSMIT

Operating Your Dryer

WARNING

To reduce the risk of fire, electric shock, serious injury or death to persons, read the Safety Information section before operating the dryer.

W520

Control Panel

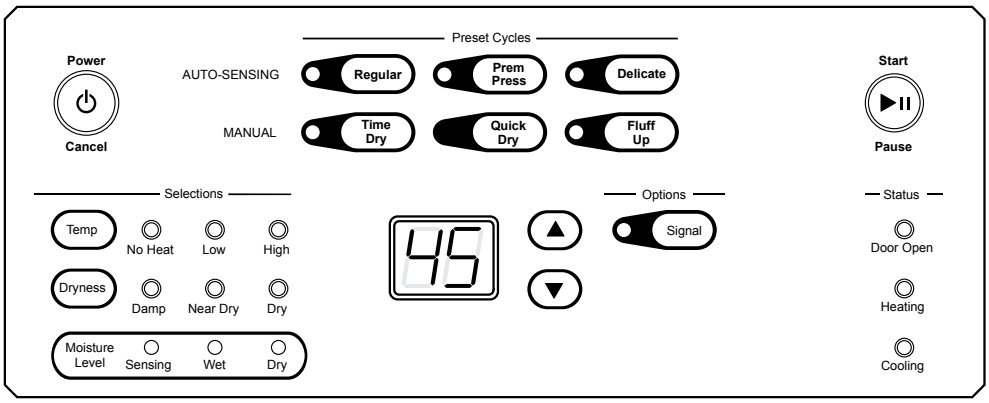

DRY2671N_SVG

Digital Display

The two-digit display is used to show the time remaining in a cycle.

When the control is powered off, the right-most decimal in the display will flash every one to five minutes to indicate that the machine is in Idle Mode.

The display also shows diagnostic codes.

Idle Mode

If no keypads have been pressed for five minutes after a cycle is finished, the control will enter Idle Mode. A light in the lower right corner of the digital display will flash every one to five minutes. Press the Power/Cancel keypad to exit this mode and power the display for cycle/option selection. This light will flash again after five minutes when it re-enters Idle Mode.

Cycles

The following cycle descriptions will help determine which cycle to choose depending on the type of laundry being dried. The cycle settings may be modified using the Selections and Options.

Auto-Sensing

The Auto-Sensing drying cycle operation is determined by the type of cycle selected as well as the moisture sensing system, which can be set by changing the Dryness setting. Auto-Sensing cycles are Energy Saver cycles that help prevent over-drying.

When a wet load is put into the dryer it takes a certain amount of time to reach the desired dryness level. The time will vary with load size, type of fabric, amount of moisture in the load, air flow and the laundry room environment. The estimated time will be shown in the digital display.

NOTE: The time shown before starting the cycle is estimated by averaging the last 5 cycles run on the selected cycle/dryness combination.

The Auto-Sensing cycles are not suggested to be used for small loads such as two small towels. For those loads, use the Time Dry cycle.

Cycle	Use
Regular	Use for sturdy items like play or work clothes.
Perm Press	Use for permanent press items and synthetics.
Delicate	Dry delicate items on this cycle.

Manual

There are three manual cycles: Time Dry, Quick Dry and Fluff Up. These cycles will run for the set number of minutes shown on the

© Copyright, Alliance Laundry Systems LLC - DO NOT COPY or TRANSMIT

digital display. The cycle time can be increased or decreased using the up and down arrow keypads. The time and temperature selection may be adjusted manually at any time before or during the cycle.

Selections

The following selections can be used to modify the currently chosen cycle. The default selections will be lit after choosing a cycle.

Temp

Press the Temp keypad to change a Manual cycle's temperature.

Choose from No Heat, Low or High.

Dryness

Press the Dryness keypad to change the dryness level in an Auto-Sensing cycle. Choose from Damp, Near Dry or Dry.

Damp	Leaves load slightly damp for easier ironing.
Near Dry	Use for normal loads.
Dry	Use for heavy items such as blue jeans and blankets.

Over-drying can cause wrinkling, shrinking, excessive lint conditions, and will use more energy than necessary. To increase energy savings and to make sure loads are dried without over-drying, set your Auto-Sensing loads on Near Dry. If items are damp or over-dry at the end of a cycle, increase or decrease the Dryness setting the next time these loads are dried. Remember the settings that work best to get ideal drying results.

Moisture Level

The Moisture Level status lights will be lit during an Auto-Sensing cycle. The Sensing light will be lit at the beginning of the cycle.

The Wet and Dry lights will be lit based on readings from the moisture sensing system.

Options

The following options can be used to modify the currently chosen cycle.

Signal (on select models only)

Pressing the Signal keypad will change the end of cycle signal volume. There are four settings: Off, Low, Medium, High.

Status

The Status lights are lit during the cycle to show what part of the cycle is running.

Door Open	The Door Open status light is lit any time that the dryer door is open.
Heating	The Heating status light is lit to indicate that a heat portion of the cycle is currently operating.
Cooling	The Cooling status light is lit during the cool-down portion of the cycle.

NOTE: The Heating or Cooling status light flashes (1 second on/1 second off) during the warm-up period. The status light stays lit until the motor starts running.

To Dry Clothes

IMPORTANT: Refer to the INSTALLATION INSTRUCTIONS before using dryer.

IMPORTANT: Before using dryer for the first time, use an all-purpose cleaner or a detergent and water solution and a damp cloth to remove shipping dust from inside of dryer drum.

1. Sort items into separate loads.

   NOTE: Remove all objects from pockets such as lighters and matches.

   NOTE: Remove all sharp objects from laundry to avoid tears and rips to items during normal machine operation.

2. Clean lint filter.

© Copyright, Alliance Laundry Systems LLC - DO NOT COPY or TRANSMIT

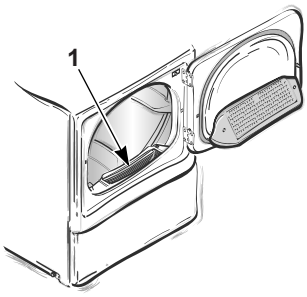

DRY2757N_SVG

1. Lint Filter

Figure 1

WARNING

To reduce the risk of fire and risk of lint collecting in exhaust duct, do not operate dryer without lint filter in place.

W771

3. Load dryer half full with laundry (18 pounds [8.2 kg]) maximum dry clothes load). Add fabric softener sheet, if desired.

   NOTE: To avoid damage to dryer, do not use more than one fabric softener sheet per load.

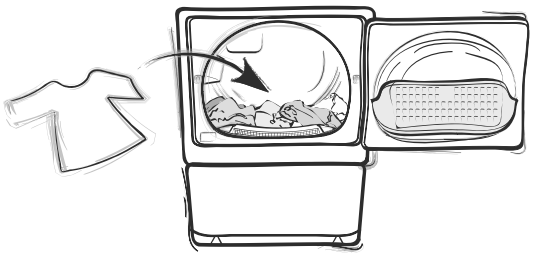

DRY2543N_SVG

4. Close loading door. Dryer will not operate with the door open.

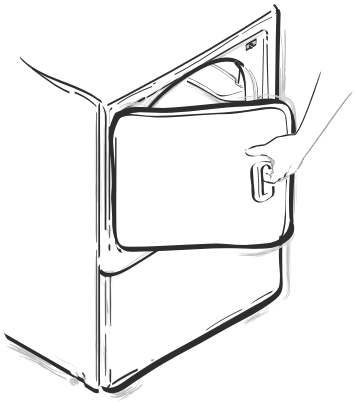

DRY2026N_SVG

5. If not already on (control lights will be lit), turn on the dryer by pressing the Power/Cancel button.

   NOTE: You will not be able to press the Start/Pause button to Pause the cycle until the motor is running. If the Start/Pause button is pressed while attempting to run the motor (during the warm-up period), an invalid keypress tone will sound.

6. Select the Cycle and, if desired, change the Selections and Options settings. Follow garment manufacturer's care labels for recommended temperature settings.
7. Press the Start/Pause button to begin the cycle.

   IMPORTANT: The final part of dryer cycle occurs without heat (cool down cycle) to ensure that items in dryer are left at a temperature that ensures that the items will not be damaged.

   NOTE: To stop dryer at any time, open the door or press the Start/Pause button. To restart dryer, close door and press the Start/Pause button again.

Optional Drying Rack

A drying rack, Part No. D512082, is available at extra cost through your Factory Authorized Service Center.

The drying rack can be used in manual cycles only for no-tumble drying of articles such as tennis shoes, sweaters, stuffed toys or other delicate items.

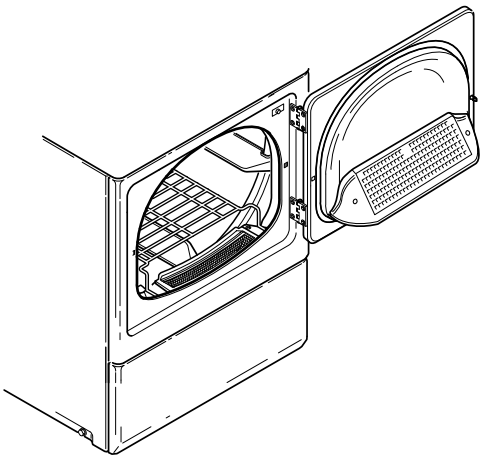

DRY2332N_SVG

© Copyright, Alliance Laundry Systems LLC -
DO NOT COPY or TRANSMIT

Maintenance

Lubrication

All moving parts are sealed in a permanent supply of lubricant or are equipped with oilless bearings. Additional lubrication will not be necessary.

Care of Your Dryer

WARNING

To reduce the risk of an electric shock, serious injury or death, disconnect the electrical service to the dryer before cleaning the interior.

W132

Dryer Interior

Wipe the surfaces using a soft cloth and household cleaner or a non-abrasive paste of powdered laundry detergent and hot water, followed by a short heat cycle with a load of rags.

To remove crayon or ball point ink off the dryer drum, put the heat on high and use old rags in the dryer to absorb the crayon or ink. If unsuccessful, contact the appliance dealer. DO NOT use any chemicals in the dryer.

IMPORTANT: The use of chlorine bleach for removing any discolorations should be avoided because bleach could damage the finish.

Cabinet

Wipe the dryer cabinet as needed. If detergent, bleach or other washing products have been spilled on the dryer, wipe immediately. Some products will cause permanent damage if spilled on the cabinet.

Control Panel

Use only a damp or sudsy cloth for cleaning the control panel. Some spray pretreat products may harm the finish on the control panel. DO NOT use products that contain alcohol on the control panel.

Exhaust System

WARNING

To reduce the risk of electric shock, disconnect the electrical service to the dryer before cleaning.

W043

WARNING

Any disassembly requiring the use of tools must be performed by a suitably qualified service person.

W299

The exhaust duct should be inspected after one year of use and cleaned if necessary by a qualified service person to remove any lint build-up. Inspect and clean exhaust duct every one to two years as required thereafter.

Every two years a qualified service person should remove all front panels and vacuum the inside of the dryer

NOTE: This recommended maintenance is not covered under the terms of the warranty.

The weather hood should be checked frequently to make sure the dampers move freely, dampers are not pushed in and that nothing has been set against them.

Keep dryer area clear and free from combustible materials, gasoline and other flammable vapors and liquids.

Do not obstruct the flow of combustion and ventilation air.

NOTE: Verify proper operation after servicing.

Motor Overload Protector

The dryer's motor overload protector stops the motor automatically in the event of an overload. The control's digital display will show "Er", "ro" alternately. After cooling, the overload protector will reset itself.

The control can be cleared by pressing START and the dryer can be restarted by pressing START again. If overload protector cycles again, remove the dryer from use and call the service person to correct the problem.

© Copyright, Alliance Laundry Systems LLC - DO NOT COPY or TRANSMIT

Lint Filter

The lint filter is located at the front of the dryer in the lower part of the door opening.

CLEAN THE LINT FILTER BEFORE DRYING EACH LOAD.

Annually remove lint filter and screw to vacuum the duct under it.

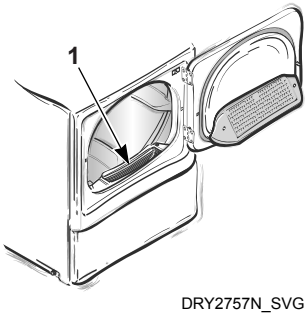

1. Lint Filter

Figure 2

© Copyright, Alliance Laundry Systems LLC -
DO NOT COPY or TRANSMIT

Troubleshooting

Try these troubleshooting tips before making a service call. They may save you time and money.

Dryer Symptom	Possible Cause/Solution
Dryer won't start	• Make sure the power cord is plugged all the way into the electrical outlet. • Make sure loading door is closed. • Press Start/Pause button to start dryer. • Make sure the laundry room fuse(s) isn't blown or loose, or circuit breakers aren't open. • The dryer itself does not have an electrical fuse. An electric dryer has an electrical circuit with two fuses. • Check if motor overload protector has cycled. Wait 10 minutes and try again.
Dryer won't heat	• Electric dryers only – Some homes may have two fuses or circuit breakers for an electric dryer; both fuses or circuit breakers should be checked. Make sure the laundry room fuse(s) isn't blown or loose, or that the circuit breakers aren't open. • Make sure control is not in Cooling part of cycle or that the Temp selection is not set to heat. • Gas dryer only – Make sure equipment and main gas line valve is turned on. • Check exhaust duct to outside to see if it is kinked, blocked or needs cleaning. • Check weather hood to make sure flapper moves freely, has not been pushed in or has not been blocked.
Dryer doesn't dry clothes satisfactorily	• Check exhaust duct to outside to see if it is kinked, blocked or needs cleaning. • Check weather hood to make sure flapper moves freely, has not been pushed in or has not been blocked. • Auto-Sensing cycle – Adjust Dryness selection. • Manual cycle - Allow more or less time. • Clean the lint filter. • Make sure the load isn't too small. Small loads may not tumble properly or dry evenly. • The Auto-Sensing cycles are not suggested to be used for small loads such as two small towels. For those loads, use the Time Dry cycle. • Check load being dried. Heavy items dried with lightweight items will not dry as quickly as the rest of the load. • Refer to Sort section for proper sorting information.

Table continues...

© Copyright, Alliance Laundry Systems LLC - DO NOT COPY or TRANSMIT

Dryer Symptom	Possible Cause/Solution
Dryer is noisy	• Check dryer for foreign objects (nails, coins, bobby pins, metal, plastic toys, etc.). Remove items from dryer. • Make sure dryer is level. Uneven leveling can cause vibration. • Normal operating sounds include the heat source going on and off and the humming of air moving through the dryer and exhaust system.
Clothes are too wrinkled	• Check heat setting. Overdrying can cause wrinkling. • Check load size. Large loads may not tumble properly and may cause wrinkling.
Clothes have odor	• Check room for odors before drying clothes. Any odor (fried foods, paint, varnish, cleaners, burning wood, etc.) will transfer to clothing as the dryer draws air from the room. • Ventilate room before drying clothes.
Cycle advances too slowly	• When in an Auto-Sensing cycle, the time it takes depends on the type and size of the load being dried. When clothing has more moisture, the cycle takes longer than when the clothes are more dry.
Er, ro on digital display	• The dryer's motor overload protector has cycled. • The control can be cleared by pressing the Start/Pause button and the dryer can be restarted by pressing the Start/Pause button again. • If this code is displayed again, remove the dryer from use and call a service person.

© Copyright, Alliance Laundry Systems LLC -
DO NOT COPY or TRANSMIT

Contact Information

If service is required, contact the nearest Factory Authorized Service Center.

If you are unable to locate an authorized service center or are unsatisfied with the service performed on your unit, contact:

Alliance Laundry Systems
Shepard Street
P.O. Box 990
Ripon, Wisconsin 54971-0990
www.alliancelaundry.com
Phone: +1 (920)748-3121

Date Purchased	
Model Number	
Serial Number	

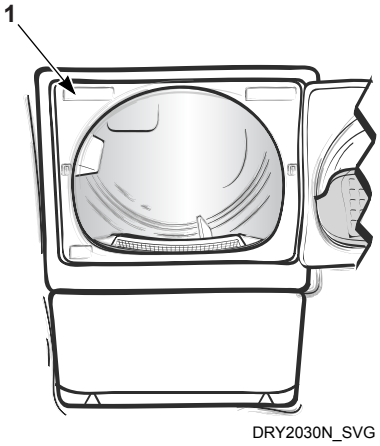

1. Serial Plate

When contacting us about your washer, PLEASE GIVE THE MODEL AND SERIAL NUMBERS. The model and serial numbers are located on the serial plate. The serial plate will be in the location shown. Please include a copy of your bill of sale and any service receipts you have.

If replacement parts are required, contact the source from where you purchased your unit or call +1 (920) 748-3950 for the name and address of the nearest authorized parts distributor.

WARNING

To reduce the risk of serious injury or death, DO NOT repair or replace any part of the unit or attempt any servicing unless specifically recommended in the user-maintenance instructions or in published user-repair instructions that you understand and have the skills to carry out.

W329

© Copyright, Alliance Laundry Systems LLC - DO NOT COPY or TRANSMIT