MONOGRAM 24" UNDERCOUNTER WINE RESERVE

ZIWD24PWII

MONOGRAM

When ordering this product, be sure to use the model number associated with the chosen handle and stainless steel panels if desired.

Statement handle
ZXGP1H1PWSS

Minimalist handle
ZXGP1H1CPSS

Stainless Steel Panel & Toe Kick
ZK1GC240WSS

MINIMALIST HANDLE

Model is shown with the Minimalist handle, which needs to be ordered separately. To order this handle use model number ZXGP1H1CPSS.

42 BOTTLE CAPACITY

Expansive wine storage, for up to 42 bottles, with 2 shelves designed for magnum storage

6 FULL EXTENSION SMOOTH GLIDE RACKS

Smooth glide full extension racks allow you to easily stock with your favorite wine selections

INTEGRATED DESIGN

Seamless installation capabilities for beautiful integration to enhance the overall kitchen or bar design

ILLUMINATED INTERIOR

Back wall lighting and overhead LED lights brighten the interior to easily select a perfect pairing

DELICATE STOREAGE

Beautifully crafted wooden slats to cradle bottles, with a stainless edged finish, designed to maintain label integrity

DUAL ZONE COOLING

Select different temperatures in the upper and lower compartments

PANEL READY REFRIGERATION

Use custom panels to match your cabinetry from your cabinetmaker, or purchase a Stainless Steel panel – STAINLESS PANELS SOLD SEPARTELY

EXPANDED ENTERATINMENT AREAS

Install your wine reserve directly next to Monogram's other undercounter products, such as built in ice makers or beverage centers

BACKLIT ELECTRONIC CONTROL

Set the perfect temperature to prepare your wine, connect to WiFi, and control the light settings with backlit LED control panel

UV PROTECTED GLASS

Ensure your wine is preserved properly with UV protected glass to shield from damaging lighting

MONOGRAM

SPECIFICATIONS

Overall Width	23 7/8"
Overall Height	34 1/10" - 35 1/10 "
Overall Depth	23 3/8" (59.4 cm)
Overall Capacity	Up to 42 bottles
Minimum Cabinet Width	24" (61.0 cm)
Minimum Cabinet Depth	24" (61.0 cm)
Cutout Width	24" (60.6 cm)
Cutout Height	34 1/2" (87.6 cm) Min 35" (88.9 cm) Max
Electrical Requirements	1.2 A
Voltz/Hertz/Amps	120 V, 60 Hz, 15 or 20 amp circuit
Shipping Weight	162 lb (73.5 kg)

ATTENTION ELECTRICIAN:

A 115 volt 60Hz, 15 or 20 amp power supply is required. An individual properly grounded branch circuit or circuit breaker is recommended. Install a properly grounded 3-prong electrical receptacle recessed into the back wall.

NOTE: Always refer to installation guide for complete installation instructions

PRODUCT DIMENSIONS

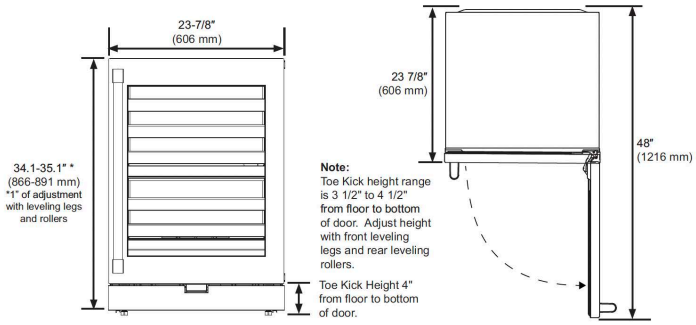

INSTALLATION SPACE

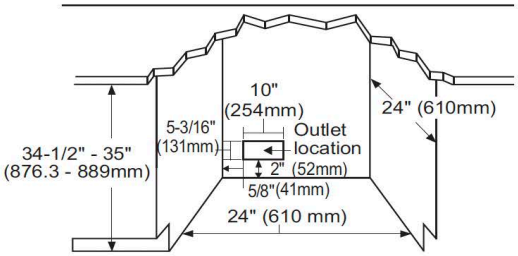

SIDE BY SIDE INSTALLATION

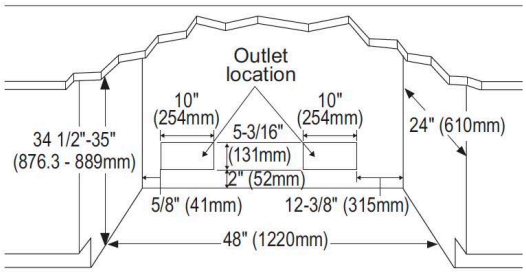

PRODUCT CLEARANCES

When installed in a corner:

- Allow 4" (100 mm) min. clearance on the hinge side for the 90° door swing and to allow racks to slide out.
- Allow 13" (330 mm) minimum clearance on the hinge side for a full 115° door swing.

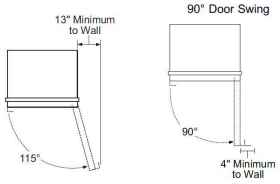

To prevent door from opening more than 90 degrees, insert hinge pin **A** from accessory bag into the bottom hinge pin hole. Make sure the pin sits all the way down and the door can be closed smoothly.

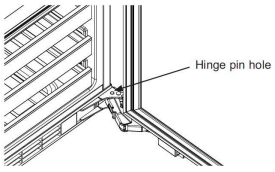

Dimensions in parentheses are in centimeters unless otherwise noted. Actual product dimensions may vary due to manufacturing tolerances.