MONOGRAM 36" ALL GAS PROFESSIONAL RANGE WITH 6 BURNERS

ZGP366NTSS (NATURAL GAS)

MONOGRAM

ADA COMPLIANT

BURNER PERFORMANCE

Front Left Burner Element	23,000-BTU
Back Left Burner Element	18,000-BTU
Front Middle Burner Element	15,000-BTU
Back Middle Burner Element	15,000-BTU
Front Right Burner Element	23,000-BTU
Back Right Burner Element	18,000-BTU

VERSATILE GAS BURNER CONFIGURATION
Delivering exceptional cooking flexibility, the two 23,000-BTU multi-ring brass burners and dual-stack burners offer a range of heat settings, from gentle simmer to intense flame

3-PIECE GRATES WITH REVERSIBLE WOK FEATURE
Designed to adapt to different cooking styles, these reversible grates are flat on one side and uniquely contoured on the other to perfectly fit round-bottom woks

WIFI MONITORING AND REMOTE CONTROL WITH THE SMARTHQ™ APP
Perfect for a busy lifestyle, built-in WiFi capabilities allow for the remote activation of cooking functions, like preheating the oven, setting timers, activating Chef Connect and more

DYNAMIC OVEN LCD
Functional and stylish, the LCD shows which oven mode is currently in use and other helpful information, like oven temperature, timer and probe temp

CHEF CONNECT
Stay completely connected with Chef Connect, the smart and convenient feature that can effortlessly synchronize a range of kitchen items such as surface lights and even the vent when the burners are on

INDUSTRY EXCLUSIVE–CUSTOM COLOR LED ACCENT LIGHTING
For an elevated level of luxury, use the SmartHQ™ app to customize the accent lighting color and brightness to perfectly match your kitchen décor or dining ambiance

RING-LIT KNOBS
Delivering a modern approach to customization, the SmartHQ™ app allows for the range knobs to be set in any color you choose, indicating when a burner is on and showing the status of the oven

SOLID BRASS BLADES ON PRECISION MACHINED KNOBS
With an unmatched attention to detail, all knobs on the new Monogram Pro ranges and range tops come with solid brass accents

SEAMLESS STAINLESS TOP FRAME
Meticulously crafted from one piece of stainless steel that covers the cooktop and control panel, this seamless and stylish surface is easy to clean and beautiful to look at

SOFT-CLOSE HINGES
Specially designed, soft-close hinges ensure that the oven door always closes smoothly and quietly for a new level of kitchen refinement

2 OVEN RACKS (FULL-EXTENSION), 1 LOW PROFILE
Oven racks glide smoothly in and out on stainless steel ball bearings for easy access

PRECISION OVEN MODES WITH SMARTHQ APP
Simplify the cooking process with Precision Oven Modes that automatically track progress and make time and temperature adjustments

PRECISE AIR CONVECTION SYSTEM
Designed to optimize air movement in the oven, the convection fan system automatically adjusts airflow—forwards or backwards—depending on the oven mode being used

*Natural Gas Model

MONOGRAM

SPECIFICATIONS

Overall Width	35 7/8" (91.1 cm)
Overall Height	35 1/4" (89.5 cm)
Overall Depth	28 1/4" (71.6 cm)
Door Clearance	48 1/4" (122.5 cm)
Cutout Width	36" (91.4 cm)
Cutout Height	35 1/4" - 36 3/4" (89.5 - 93.3 cm)
Shipping Weight	462 lbs (209.5 kg)

ATTENTION ELECTRICIAN:

Electrical requirements: Ranges must be hooked up to a 120V, 60Hz properly grounded dedicated circuit protected by a 15-amp circuit breaker or time-delay fuse. See installation instructions for further details.

OVERALL DIMENSIONS

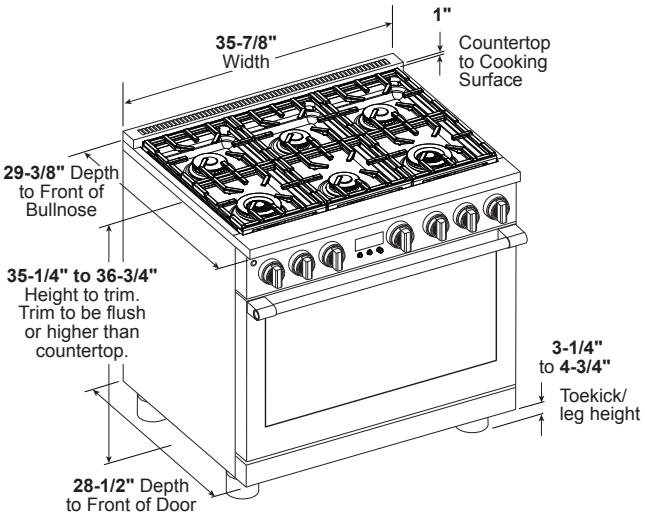

SIDE VIEW WITH A BACKSPLASH

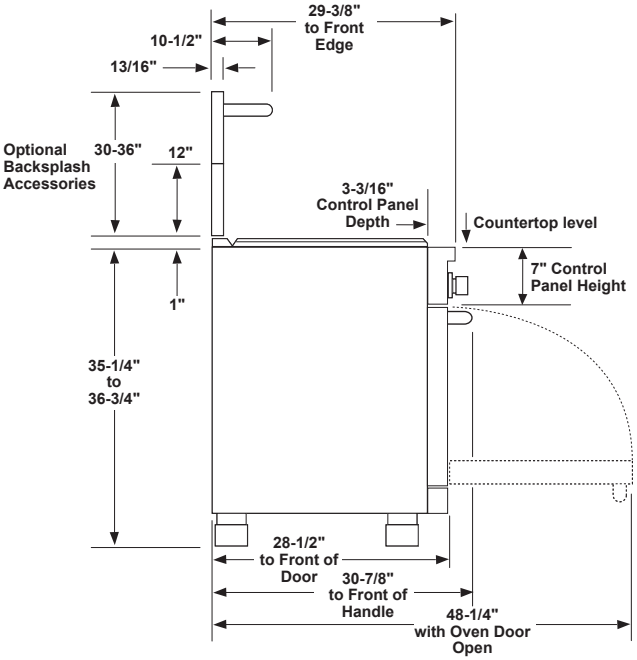

MONOGRAM

DIMENSIONS AND INSTALLATION INFORMATION (IN INCHES)

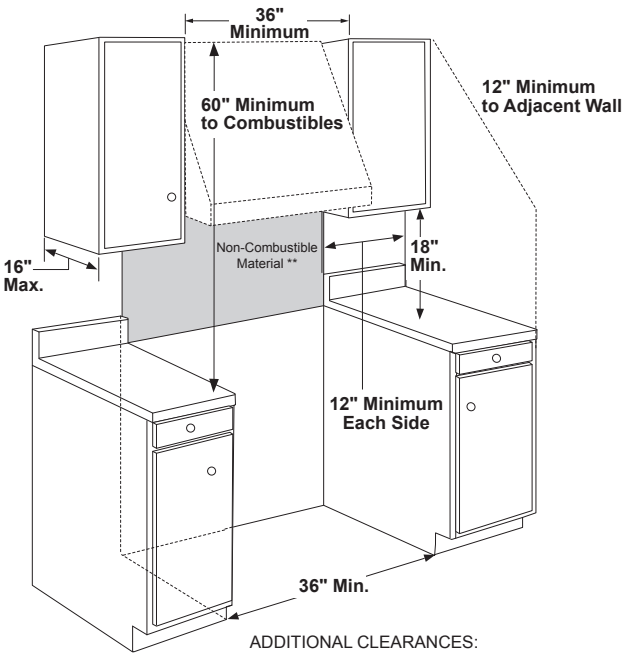

ADDITIONAL CLEARANCES:

Allow 12" minimum clearance to an adjacent wall on each side.

Working areas adjacent to the rangetop should have 18" minimum clearance between countertop and the bottom of the wall cabinet.

** As defined in the National Fuel Gas Code (ANSI Z223.1/CSA B149.1, Current Edition). Clearances from non-combustible materials are not part of the ANSI Z21.1/CSA 1.1 scope and are not certified by CSA. Clearances less than 12" must be approved by local codes and/or the authority having jurisdiction.

HELPFUL TIPS

All Professional Ranges are factory set for natural gas.

NOTE

A propane conversion kit is included with the range. High Altitude kit for operation above 6,000 feet (for Natural and LP gas models), is available at an additional cost. The conversion must be performed by a qualified gas installer at additional cost.

HA NG Service Kit: WB28X39726
HA LP Service Kit: WB28X39727

INSTALLATION INFORMATION

Before installing, consult installation instructions packed with product or online at Monogram.com for current dimensional data. A suitable overhead vent hood is required for models with a grill and is recommended for all other models.

ADVANCE PLANNING

Refer to dimensional drawings for appropriate placement and necessary clearances when planning the installation.

- Working areas adjacent to the range should have 18" minimum clearance between countertop and cabinet bottom.
- Clearance between range and side wall or combustible material must be at least 12" on each side.
- Installation must conform with local codes. In the absence of local codes, the range must comply with the National Fuel Gas Code, ANSI Z223.1-1990.

⚠ WARNING

Installations without a hood require 60" minimum to combustibles. A custom hood installation with exposed horizontal combustible surfaces must have an Auto-On feature. Refer to hood installation instructions for specific hood clearances.

The surface of the entire back wall above the range and below the hood must be covered with a non-combustible material such as metal, ceramic tile, brick, marble or other stone.

MONOGRAM

DIMENSIONS AND INSTALLATION INFORMATION (IN INCHES)

UTILITY LOCATIONS

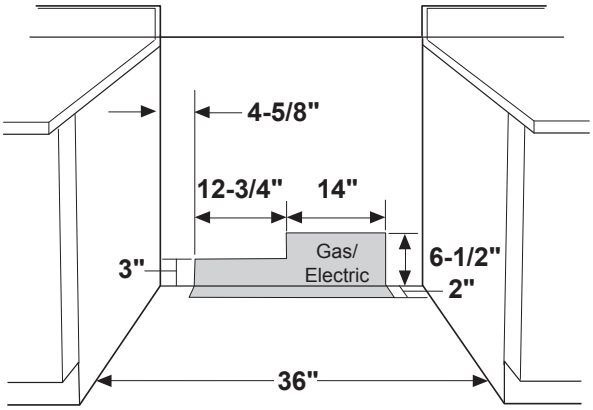

Locate gas and electric as shown

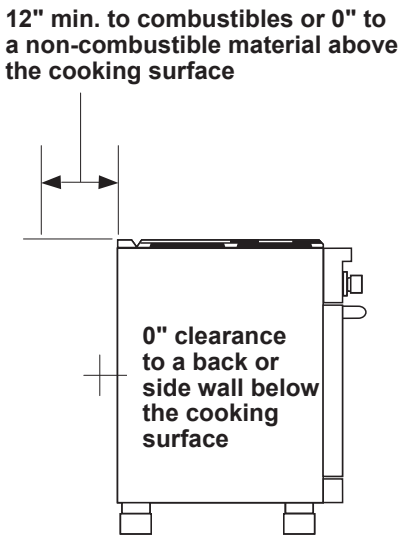

HELPFUL TIPS

GAS PRESSURE REGULATOR

You must use the gas pressure regulator supplied with this rangetop. For proper operations the inlet pressure to the regulator should be as follows:

Natural Gas:

Minimum pressure: 6" of Water Column
Maximum pressure: 13" of Water Column

Propane (LP) Gas:

Minimum pressure: 11" of Water Column
Maximum pressure: 13" of Water Column

See installation instructions for more details

OPTIONAL BACKSPLASH ACCESSORIES

- The range requires a 12" minimum clearance to a vertical combustible surface at the rear. A backsplash is required for installations with less than 12" clearance. The following backsplash accessories are available, or a custom, non- combustible backsplash can be used.
- Order one with a 36"-wide range backsplash:
- UX12BS36PSS–12"-height backsplash
- UXADBS36PSS–30"-36" adjustable-height backsplash with warming shelf

OPTIONAL STAINLESS STEEL KNOB KITS AVAILABLE

ZXPR36KKTSS - 30" and 36" Range
ZXPR48KKTSS - 48" Range