# 30" Industrial Style Dual Fuel Range

800 Series – Black Stainless Steel HDS8045U

**HDS8045U**
Black Stainless Steel

Also available in:

Stainless Steel HDS8055U

**First 30" Bosch Industrial Style Range with double ring burner.**

## Features & Benefits

- Black stainless steel helps guard against scratches and fingerprints to maintain their bold look.
- Powerful 18,000 BTU double ring burner speeds cooking time.
- Convection Pro combines a third heating element with a back fan for even browning and time savings by using multiple racks at one time.
- Dishwasher safe grates for easy cleaning.
- Dampened hinges softly guide the QuietClose® door shut so the oven door never slams.
- Heavy-duty metal knobs for a premium look and feel.

| General Properties | |
|---|---|
| Cooking modes | Bake, Convection Bake, Broil, Convection Broil, Convection Roast, Pizza, Proof, Convection Multi-Rack, Sabbath Mode |
| Cleaning type | Catalytic clean coating |
| Type of grate | Cast iron |
| Knob material | Metal |
| Interior light | 1 |
| Kitchen timer | Yes |
| Sealed burners | Yes |
| **Oven Performance** | |
| Bake / broil element watts | 1,700 / 2,900 W |
| Convection element watts | 2,700 W |
| **Burner Performance** | |
| Total cooktop burners | 5 |
| Total cooktop (NG / LP) BTU | 48,000 / 48,000 |
| Power of front left burner (NG / LP) BTU | 5,000 / 5,000 |
| Power of back left burner (NG / LP) BTU | 10,000 / 10,000 |
| Power of center burner (NG / LP) BTU | 18,000 / 18,000 |
| Power of back right burner (NG / LP) BTU | 5,000 / 5,000 |
| Power of front right burner (NG / LP) BTU | 10,000 / 10,000 |
| **Technical Details** | |
| Circuit breaker | 20 A |
| Volts | 208V / 240V |
| Frequency | 60 Hz |
| Power cord length (in.) | – |
| Plug type | Fixed connection (no plug) |

| Technical Details (Continued) | |
|---|---|
| Energy source | Mixed Electric / Gas |
| Gas type | Natural gas 14.9 mbar (USA) [7" WC] |
| Alternative gas type | LP 27.4 mbar (USA) [11" WC] |
| **Dimensions & Weight** | |
| Overall appliance dimensions (HxWxD) | 36" x 29 15/16" x 24 15/16" (26 1/2" with bull nose) |
| Required cutout size (HxWxD) | 36" x 30" x 25" |
| Adjustable range height | 35 3/8" Min. 36 5/8" Max. |
| Oven cavity size | 3.9 cu. ft. |
| Overall oven interior dimensions (HxWxD) | 17 3/8" x 24 1/3" x 18 3/8" |
| Usable oven interior dimensions (HxWxD) | 17 5/16" x 22 13/16" x 17 1/8" |
| Net weight | 195 lbs |

## Accessories—Included

Use and care manual, installation guide, temperature probe, LP conversion kit, 2 standard racks

## Accessories—Optional

**HEZ9GW23UC**
Wok Ring

**HEZ8YZ30UC**
30" Low Backguard
Black Stainless Steel

**HEZ8ZZ30UC**
30" Rear Vent Trim Extension
Black Stainless Steel

**HEZ8YZ04UC**
Side Panel Extension Kit
Black Stainless Steel

**HEZ8TK30UC**
30" Range Toe Kick
Black Stainless Steel

**HEZ8LLUC**
Metal Pedestal Feet, Set of 4
Black Stainless Steel

Intertek

† To be fully ADA compliant, these units must be installed according to ADA guidelines. Please check current ADA requirements for guidance on installation.

**Accessories:** To purchase Bosch accessories, cleaners & parts please visit www.bosch-home.com/us/store or call 1-800-944-2904 (Mon to Fri 5 am to 6 pm PST, Sat 6 am to 3 pm PST).

**Notes:** All height, width and depth dimensions are shown in inches. BSH reserves the absolute and unrestricted right to change product materials and specifications, at any time, without notice. Consult the product's installation instructions for final dimensional data and other details prior to making cutout.

**Warranties:** Please see Use & Care manual or Bosch website for statement of limited warranty.

**For more information on our entire line of products, go to www.bosch-home.com/us or call 1-800-944-2904**

© BSH Home Appliances Corporation. All rights reserved. Bosch is a registered trademark of Robert Bosch GmbH.

# 30" Industrial Style Dual Fuel Range

800 Series – Black Stainless Steel HDS8045U

## Installation Details

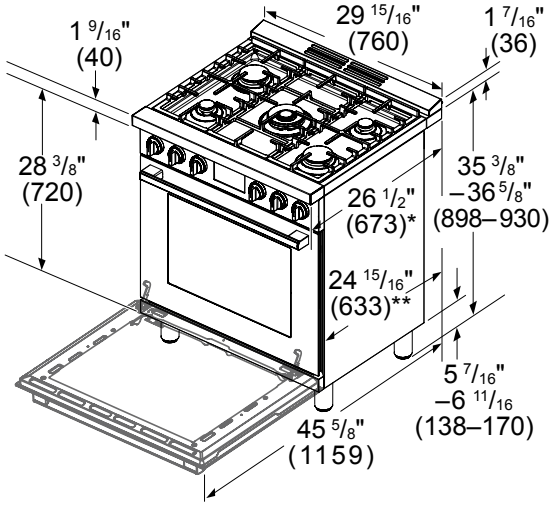


* Front of Bull Nose to Back Wall Spacer
** Front of Oven Door/Control Panel to Back Wall Spacer

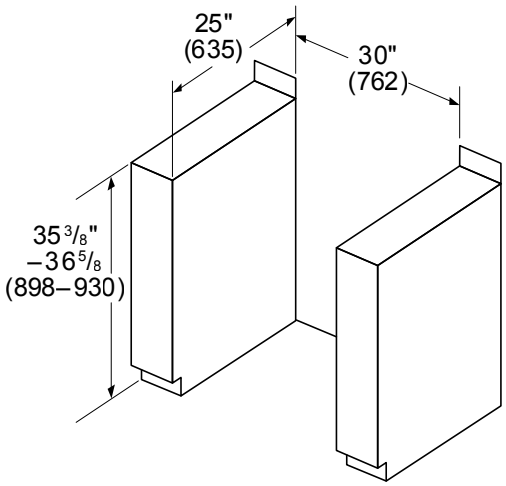


measurements in inches (mm)

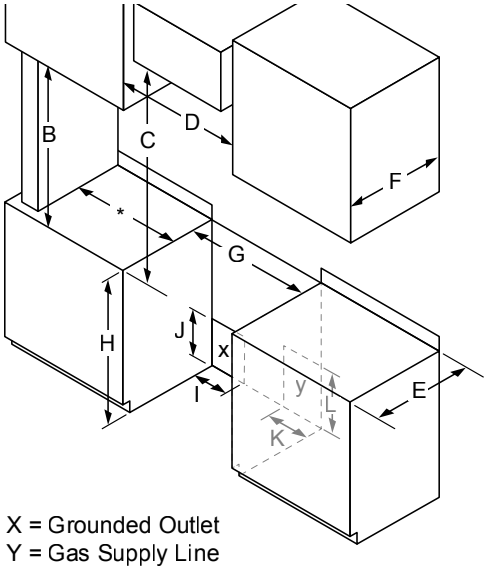


X = Grounded Outlet
Y = Gas Supply Line

B minimum 18" (457 mm)
C minimum 30" (762 mm) clearance between the top of the cooking surface and the bottom of the unprotected wood or metal cabinet
D 30": minimum 30" (762 mm)
36": minimum 36" (914 mm)
E minimum 25" (635 mm)
F maximum 13" (330 mm)
G 30": minimum 30" (762 mm)
36": minimum 36" (914 mm)
Zero clearance between adjacent combustible construction below the countertop surface and sides of the appliance.
H 35"6/16 - 36"10/16 (898 - 930 mm)
I 11" (279 mm)
J 7" (178 mm)
K 6" (150 mm)
L 11" (279 mm)

* Minimum clearance of >= 12" (305 mm) on one and >= 28" (711 mm) on the other side from cutout to side walls.

PFAS

**Accessories:** To purchase Bosch accessories, cleaners & parts please visit www.bosch-home.com/us/store or call 1-800-944-2904 (Mon to Fri 5 am to 6 pm PST, Sat 6 am to 3 pm PST).

**Notes:** All height, width and depth dimensions are shown in inches. BSH reserves the absolute and unrestricted right to change product materials and specifications, at any time, without notice. Consult the product's installation instructions for final dimensional data and other details prior to making cutout.

**Warranties:** Please see Use & Care manual or Bosch website for statement of limited warranty.

**For more information on our entire line of products, go to www.bosch-home.com/us or call 1-800-944-2904**

© BSH Home Appliances Corporation. All rights reserved. Bosch is a registered trademark of Robert Bosch GmbH.