30" Industrial Style Dual Fuel Range

800 Series – Stainless Steel HDS8055U

HDS8055U
Stainless Steel

Also available in:

Black Stainless Steel	HDS8045U

First 30" Bosch Industrial Style Range with double ring burner.

Features & Benefits

- Powerful 18,000 BTU double ring burner speeds cooking time.
- Convection Pro combines a third heating element with a back fan for even browning and time savings by using multiple racks at one time.
- Dishwasher safe grates for easy cleaning.
- Dampened hinges softly guide the QuietClose® door shut so the oven door never slams.
- Heavy-duty metal knobs for a premium look and feel.

General Properties

Cooking modes	Bake, Convection Bake, Broil, Convection Broil, Convection Roast, Pizza, Proof, Convection Multi-Rack, Sabbath Mode
Cleaning type	Catalytic clean coating
Type of grate	Cast iron
Knob material	Metal
Interior light	1
Kitchen timer	Yes
Sealed burners	Yes

Oven Performance

Bake / broil element watts	1,700 / 2,900 W
Convection element watts	2,700 W

Burner Performance

Total cooktop burners	5
Total cooktop (NG / LP) BTU	48,000 / 48,000
Power of front left burner (NG / LP) BTU	5,000 / 5,000
Power of back left burner (NG / LP) BTU	10,000 / 10,000
Power of center burner (NG / LP) BTU	18,000 / 18,000
Power of back right burner (NG / LP) BTU	5,000 / 5,000
Power of front right burner (NG / LP) BTU	10,000 / 10,000

Technical Details

Circuit breaker	20 A
Volts	208V / 240V
Frequency	60 Hz
Plug type / Cord length	Fixed connection (no plug)
Energy source	Mixed Electric / Gas

Technical Details (Continued)

Gas type	Natural gas 14.9 mbar (USA) [7" WC]
Alternative gas type	LP 27.4 mbar (USA) [11" WC]

Dimensions & Weight

Overall appliance dimensions (HxWxD)	36" x 29 15/16" x 24 15/16" (26 1/2" with bull nose)
Required cutout size (HxWxD)	36" x 30" x 25"
Adjustable range height	35 3/8" Min. 36 5/8" Max.
Oven cavity size	3.9 cu. ft.
Overall oven interior dimensions (HxWxD)	17 3/8" x 24 1/3" x 18 3/8"
Usable oven interior dimensions (HxWxD)	17 5/16" x 22 13/16" x 17 1/8"
Net weight	195 lbs

Accessories—Included

Use and care manual, installation guide, temperature probe, LP conversion kit, 2 standard racks

Accessories—Optional

HEZ9GW23UC
Wok Ring

HEZ9YZ30UC
30" Low Backguard
Stainless Steel

HEZ9ZZ30UC
30" Rear Vent Trim Extension
Stainless Steel

HEZ9YZ04UC
Side Panel Extension Kit
Stainless Steel

HEZ9TK30UC
30" Range Toe Kick
Stainless Steel

HEZ9LLUC
Metal Pedestal Feet, Set of 4
Stainless Steel

† To be fully ADA compliant, these units must be installed according to ADA guidelines. Please check current ADA requirements for guidance on installation.

Accessories: To purchase Bosch accessories, cleaners & parts please visit www.bosch-home.com/us/store or call 1-800-944-2904 (Mon to Fri 5 am to 6 pm PST, Sat 6 am to 3 pm PST).

Notes: All height, width and depth dimensions are shown in inches. BSH reserves the absolute and unrestricted right to change product materials and specifications, at any time, without notice. Consult the product's installation instructions for final dimensional data and other details prior to making cutout.

Warranties: Please see Use & Care manual or Bosch website for statement of limited warranty.

For more information on our entire line of products, go to www.bosch-home.com/us or call 1-800-944-2904

© BSH Home Appliances Corporation. All rights reserved. Bosch is a registered trademark of Robert Bosch GmbH.

30" Industrial Style Dual Fuel Range

800 Series – Stainless Steel HDS8055U

Installation Details

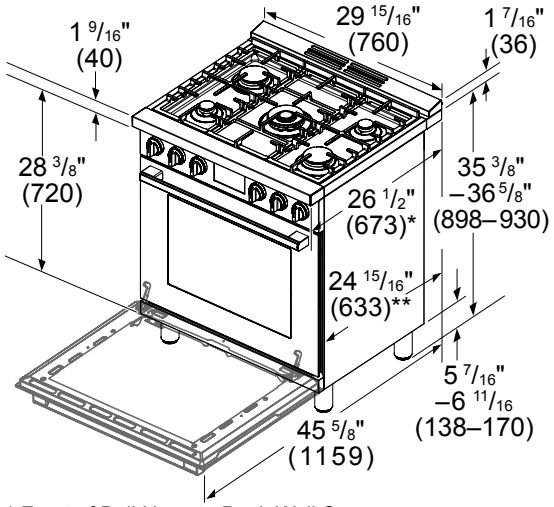

* Front of Bull Nose to Back Wall Spacer
** Front of Oven Door/Control Panel to Back Wall Spacer

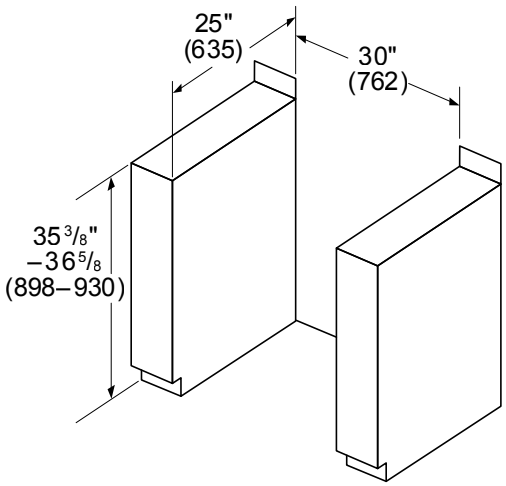

measurements in inches (mm)

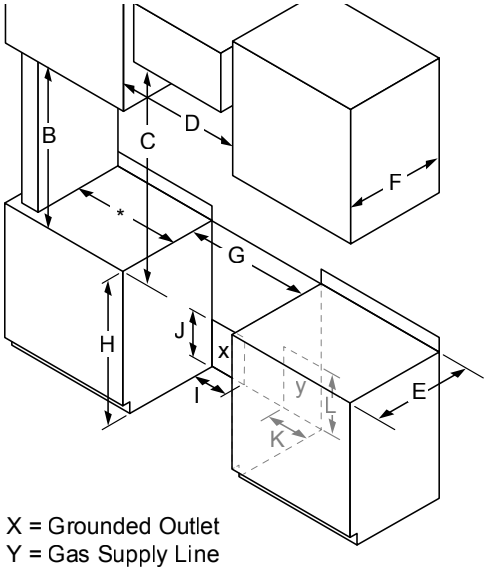

X = Grounded Outlet
Y = Gas Supply Line

B minimum 18" (457 mm)
C minimum 30" (762 mm) clearance between the top of the cooking surface and the bottom of the unprotected wood or metal cabinet
D 30": minimum 30" (762 mm)
36": minimum 36" (914 mm)
E minimum 25" (635 mm)
F maximum 13" (330 mm)
G 30": minimum 30" (762 mm)
36": minimum 36" (914 mm)
Zero clearance between adjacent combustible construction below the countertop surface and sides of the appliance.
H 35"6/16 - 36"10/16 (898 - 930 mm)
I 11" (279 mm)
J 7" (178 mm)
K 6" (150 mm)
L 11" (279 mm)

* Minimum clearance of >= 12" (305 mm) on one and >= 28" (711 mm) on the other side from cutout to side walls.

PFAS

Accessories: To purchase Bosch accessories, cleaners & parts please visit www.bosch-home.com/us/store or call 1-800-944-2904 (Mon to Fri 5 am to 6 pm PST, Sat 6 am to 3 pm PST).

Notes: All height, width and depth dimensions are shown in inches. BSH reserves the absolute and unrestricted right to change product materials and specifications, at any time, without notice. Consult the product's installation instructions for final dimensional data and other details prior to making cutout.

Warranties: Please see Use & Care manual or Bosch website for statement of limited warranty.

For more information on our entire line of products, go to www.bosch-home.com/us or call 1-800-944-2904

© BSH Home Appliances Corporation. All rights reserved. Bosch is a registered trademark of Robert Bosch GmbH.