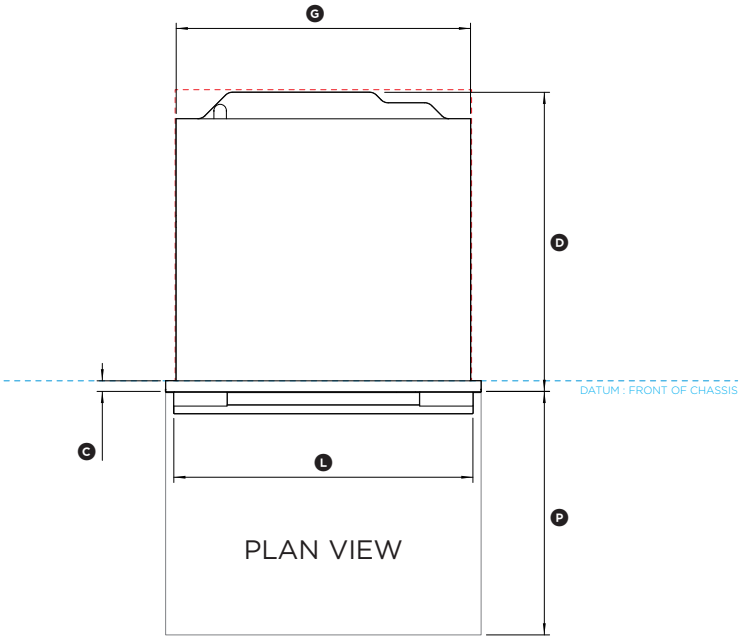

PLAN VIEW

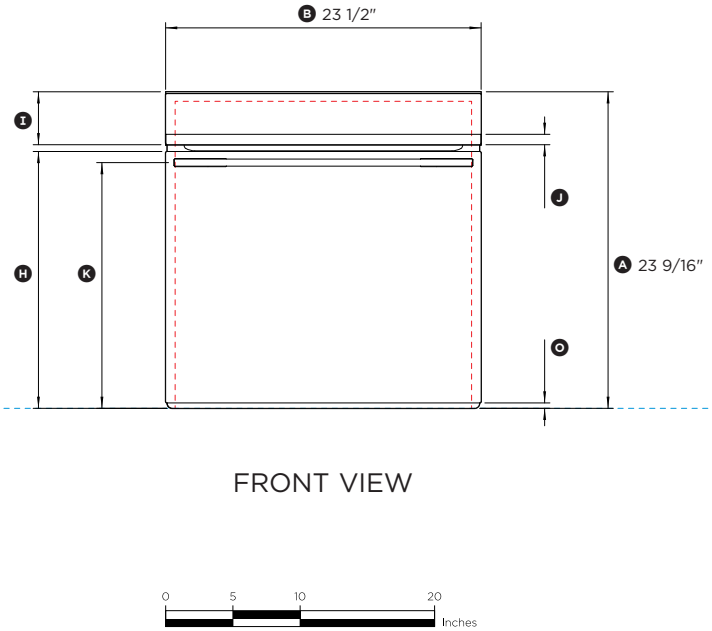

FRONT VIEW

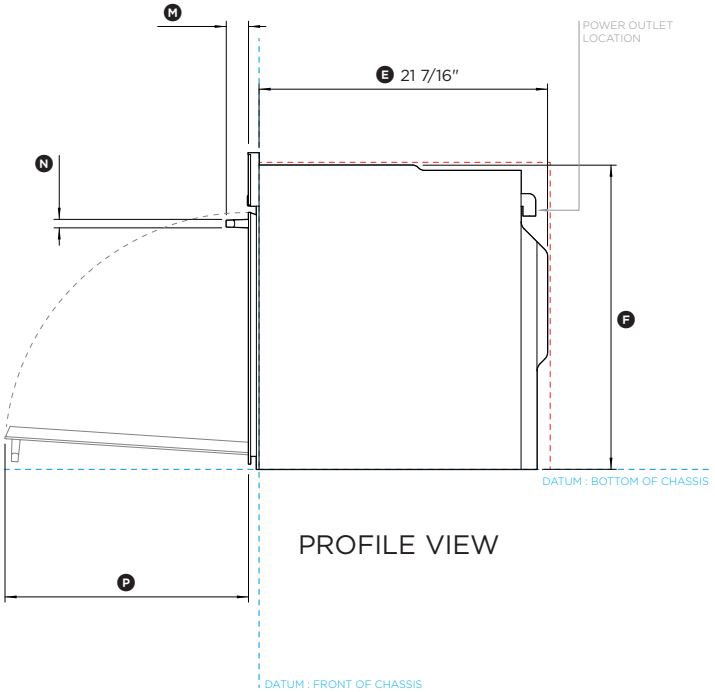

PROFILE VIEW

FISHER & PAYKEL

DATA SHEET
24" Oven

Model no:
OB24SDPTB1

(refer page 2 for metric measurements)

Product Dimensions	**in**
(A) Overall height of oven	23 9/16"
(B) Overall width of oven	23 7/16"
(C) Depth of front frame (excludes handle and front metal trim)	13/16"
(D) Depth of oven chassis and front frame (excludes handle and front metal trim)	22 1/4"
(E) Depth of chassis	21 7/16"
(F) Height of chassis	22 5/8"
(G) Width of chassis	21 7/8"
(H) Height from bottom datum to top of oven door	19 1/8"
(I) Height of control panel	3 15/16"
(J) Height of metal cap on control panel	13/16"
(K) Height from bottom datum to centerline of handle	18 1/4"
(L) Width of handle	22 1/4"
(M) Depth of handle (measured from front of door)	1 5/8"
(N) Thickness of handle	5/8"
(O) Height from bottom datum to bottom of door	3/8"
(P) Depth of door (open) (measured from front of door)	18 1/8"

Minimum Clearances	**in**
Minimum inside height of cavity	22 7/8"
Minimum inside width of cavity	22 1/16"
Minimum inside depth of cavity	21 11/16"

IMPORTANT NOTE: For full installation and clearance details please refer to our Installation Manual.

INDICATES PRODUCT DATUM ----------
INDICATES CABINETRY CLEARANCES ----------

DATE: **11.12.2019**

IMPORTANT NOTE: Throughout this guide, dimensions may vary by ±2mm (1/16"). Please read the installation manual for detailed information on installing the product. For full installation instructions & specifications visit fisherpaykel.com

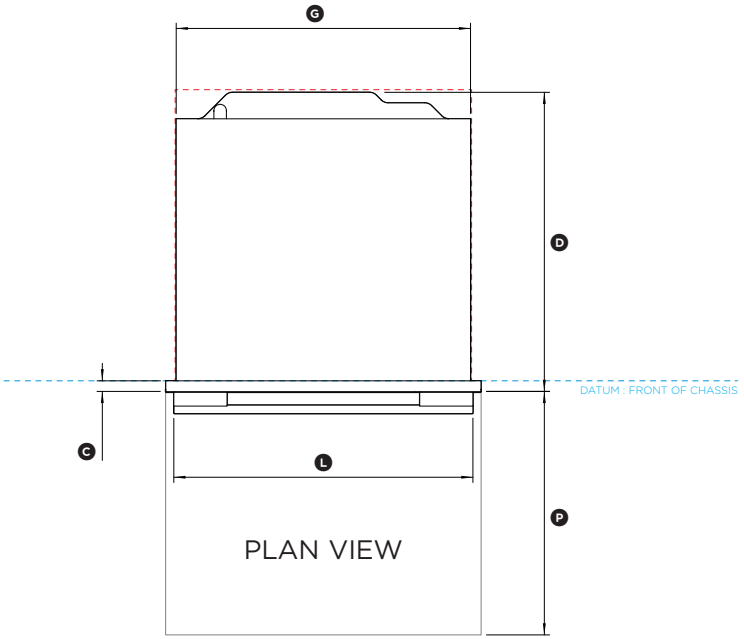

PLAN VIEW

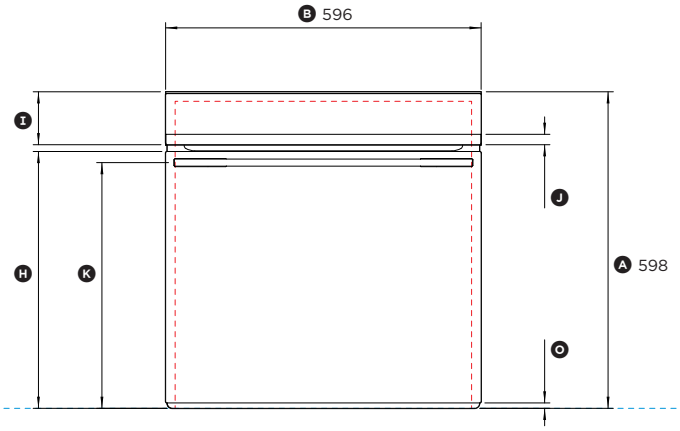

FRONT VIEW



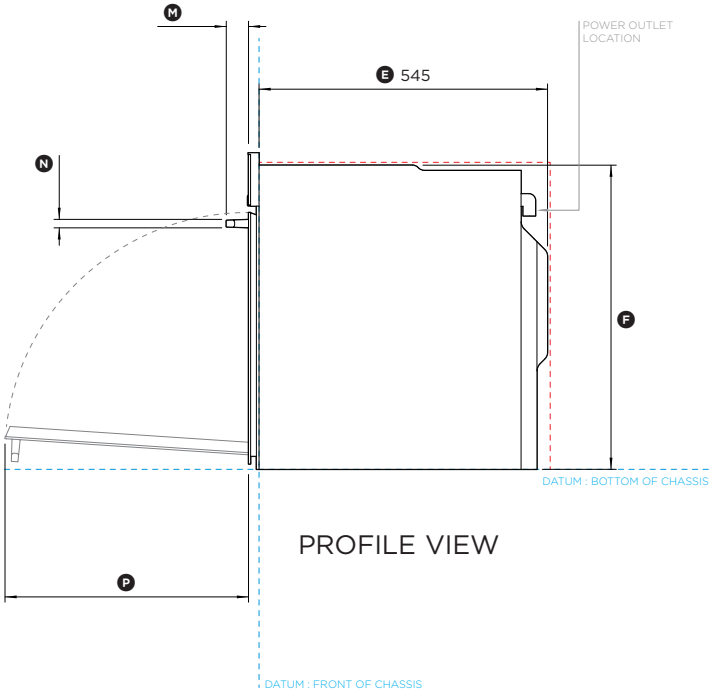

PROFILE VIEW

FISHER & PAYKEL

DATA SHEET
24" Oven

Model no:
OB24SDPTB1

(refer page 1 for imperial measurements)

Product Dimensions	**mm**
Ⓐ Overall height of oven	598
Ⓑ Overall width of oven	596
Ⓒ Depth of front frame (excludes handle and front metal trim)	20
Ⓓ Depth of oven chassis and front frame (excludes handle and front metal trim)	565
Ⓔ Depth of chassis	545
Ⓕ Height of chassis	575
Ⓖ Width of chassis	556
Ⓗ Height from bottom datum to top of oven door	485
Ⓘ Height of control panel	100
Ⓙ Height of metal cap on control panel	20
Ⓚ Height from bottom datum to centerline of handle	464
Ⓛ Width of handle	565
Ⓜ Depth of handle (measured from front of door)	42
Ⓝ Thickness of handle	16
Ⓞ Height from bottom datum to bottom of door	10
Ⓟ Depth of door (open) (measured from front of door)	460

Minimum Clearances	**mm**
Minimum inside height of cavity	580
Minimum inside width of cavity	560
Minimum inside depth of cavity	550

IMPORTANT NOTE: For full installation and clearance details please refer to our Installation Manual.

INDICATES PRODUCT DATUM ----------
INDICATES CABINETRY CLEARANCES ----------

DATE: **11.12.2019**

IMPORTANT NOTE: Throughout this guide, dimensions may vary by ±2mm (1/16"). Please read the installation manual for detailed information on installing the product. For full installation instructions & specifications visit fisherpaykel.com