MAST30FDEXT

MASTER SERIES
30" DOUBLE ELECTRIC CONVECTION OVEN
SELF-CLEAN WITH BERTAZZONI ASSISTANT



Bring Italian design and precision into your kitchen with this Bertazzoni built-in double oven, engineered to install proud or flush in any type of kitchen cabinet.

Cook to perfection with Bertazzoni dual diagonal convection fans, providing best-in-class even heat throughout the extra large 4.1 cu.ft oven cavity.

Evenly bake large batches of cookies using all 7 levels of the oven.

Sear juicy steaks and broil delicate fish fillets under the full-width 8 pass broiler.

Confidently roast meats using the food temperature probe and let the Bertazzoni Assistant manage modes, temperature and time for you.

Enjoy the convenience of smooth gliding oven racks, soft-close doors and no-fingerprint stainless steel.

Designed and manufactured with pride by Bertazzoni in Italy.

Industry leading 2 years parts and labor warranty.

PRODUCT FEATURES	
Oven type	Electric convection self-clean with electric broiler
Power rating (Rating at 240V)	Bake: 5400 W Broiler: 3400 W Convection: 3300 W
Oven Volume	4.1 cu.ft.
Lower oven volume	4.1 cu.ft.
Convection System	2 Fans
User interface	TFT display
Auto cooking modes	Yes - Bertazzoni Assistant
Cooking modes	Bake, Broil, Convection, Convection bake, Convection broil, Pizza
Special features	Assistant, Defrost, Dehydrate, Energy saving mode, Fast preheat, Keep warm, Light, Proof, Sabbath mode, Self clean, Timer
Food temperature probe	Yes
Shelf levels	7
Door hinges	Soft-close
Included accessories	1 wire shelf flat + 1 wire shelf shaped 1 set of telescopic glides 1 baking tray with roasting trivet 1 food probe
Included accessories (Lower cavity)	1 wire shelf flat + 1 wire shelf shaped 1 set of telescopic glides 1 food probe
TECHNICAL SPECIFICATIONS	
Electrical supply	120/240 V 60 HZ - 11000 W 120/208 V 60HZ - 8800 W 50 Amp dedicated circuit
Power connection	Metal conduit with 59" power cord
Certification	CSA
Warranty	2 years parts & labor
Packaging dimensions and weight	W 33 1/2" H 61" D 30" 412.5 lbs
OPTIONAL ACCESSORIES	
901272	Porcelain casserole dish
901273	Glass tray
901511	Telescopic glide set for 24" ranges and 30" wall ovens

MAST30FDEXT

MASTER SERIES
30" DOUBLE ELECTRIC CONVECTION OVEN
SELF-CLEAN WITH BERTAZZONI ASSISTANT

PRODUCT DIMENSIONS

SIDE VIEW

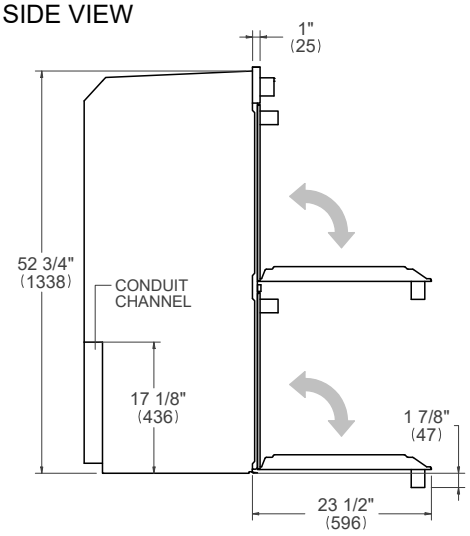

FRONT VIEW

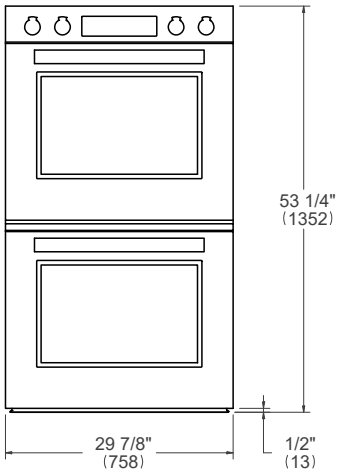

TOP VIEW

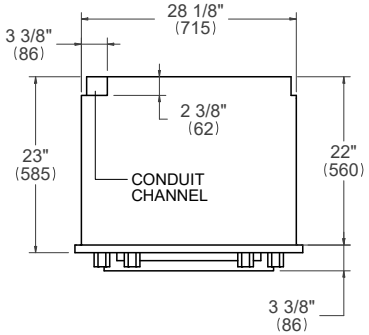

ELECTRICAL CONNECTION

FRONT VIEW

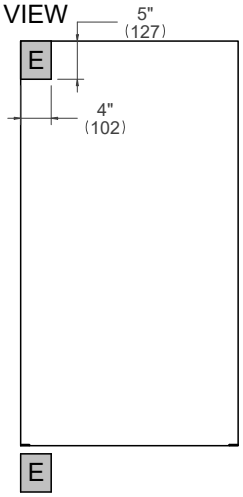

For single ovens installed into a wall cabinet, the electrical junction box may be located above, below to the left or right of the unit within reach of the power cord.
Placement within the opening may require additional cabinet depth.

INSTALLATION REQUIREMENTS

Minimum suggested load on cabinet base board is 440 lb (200 kg)

CUTOUT DIMENSIONS

TOP VIEW

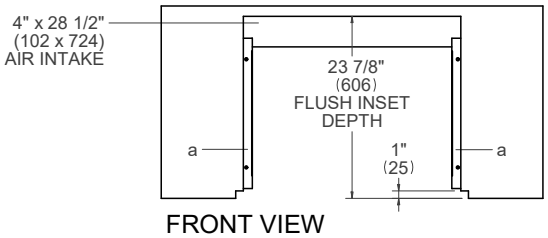

SIDE VIEW

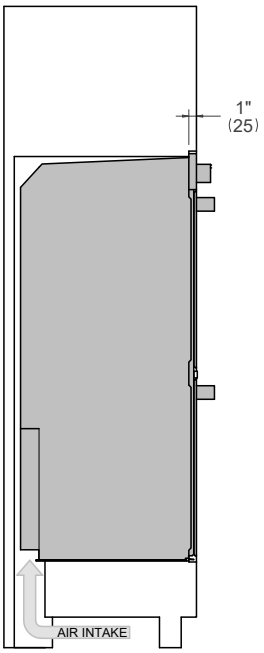

FRONT VIEW

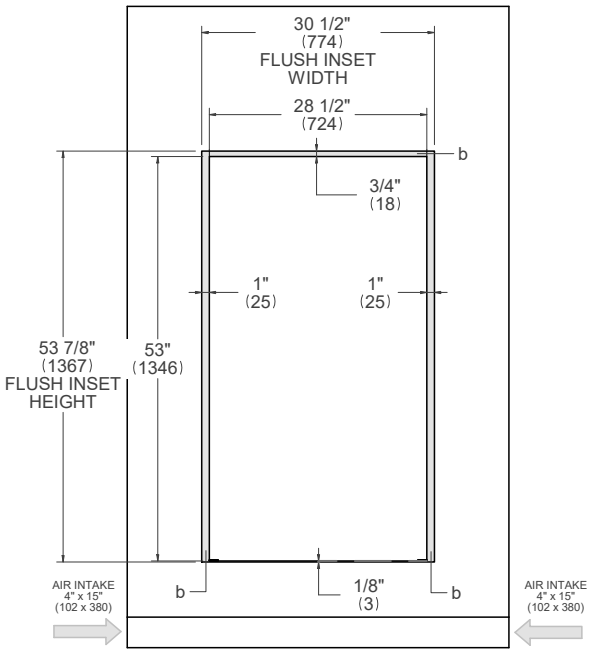

(a) Spacers – Included with appliance
(b) Visible Area – Match finish to outside cabinet panels

For installation of multiple products in combination, refer to the Design Guide at us.bertazzoni.com or ca.bertazzoni.com

Disclaimer: while every effort has been made to ensure the accuracy of the information contained in this document, Fratelli Bertazzoni reserves the right to change it at any time without notice. For detailed installation instructions, consult the installation manual. Fratelli Bertazzoni, Bertazzoni and the winged wheel brand icon are registered trademarks of Bertazzoni Spa.