PROF30WDEX

PROFESSIONAL SERIES
30" WARMING DRAWER



PRODUCT FEATURES	
Oven type	Warming drawer
Oven Volume	2.3 cu.ft.
Temperature range	85 - 170° F
Cavity finishing	Tempered glass bottom
TECHNICAL SPECIFICATIONS	
Electrical supply	120 V 60 HZ - 550 W 5 Amps
Power connection	NEMA 5-15P with 59" power cord
Certification	CETLUS
Warranty	2 years parts & labor
Packaging dimensions and weight	W 26 3/8" H 13 1/2" D 32 3/4" 87.3 lbs

Bring Italian design and precision into your kitchen with the Bertazzoni warming drawer, engineered to install proud or flush in any type of kitchen cabinet.

Keep food warm before or during the meal with the lateral convection system and variable temperature control up to 170F.

Pre-heat dishes and serving bowls to better enjoy food when served.

Load heavy items from the sides without lifting thanks to the open sides drawer construction.

Generate even heat across the entire surface with the tempered glass bottom finishing.

Designed with pride by Bertazzoni in Italy.

Industry leading 2 years parts and labor warranty.

PROF30WDEX

PROFESSIONAL SERIES
30" WARMING DRAWER

PRODUCT DIMENSIONS

SIDE VIEW

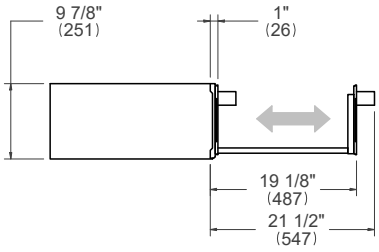

FRONT VIEW

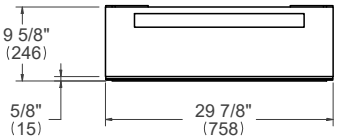

TOP VIEW

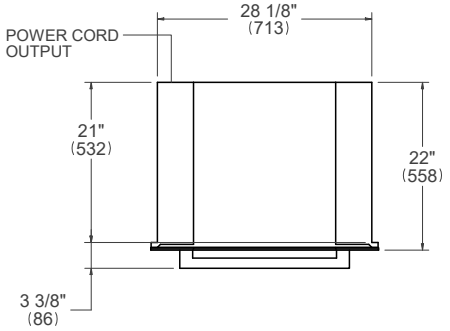

ELECTRICAL CONNECTION

FRONT VIEW

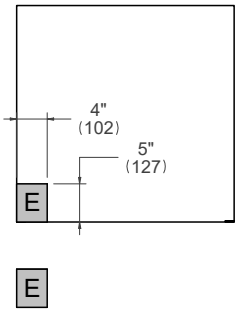

E

For single ovens installed into a wall cabinet, the electrical junction box may be located above, below to the left or right of the unit within reach of the power cord.
Placement within the opening may require additional cabinet depth.

INSTALLATION REQUIREMENTS

See BERTAZZONI DESIGN GUIDE

INSTALLATION OPTIONS

This product is designed to be installed in combination with other Bertazzoni ovens.
See several installation options shown in BERTAZZONI DESIGN GUIDE.

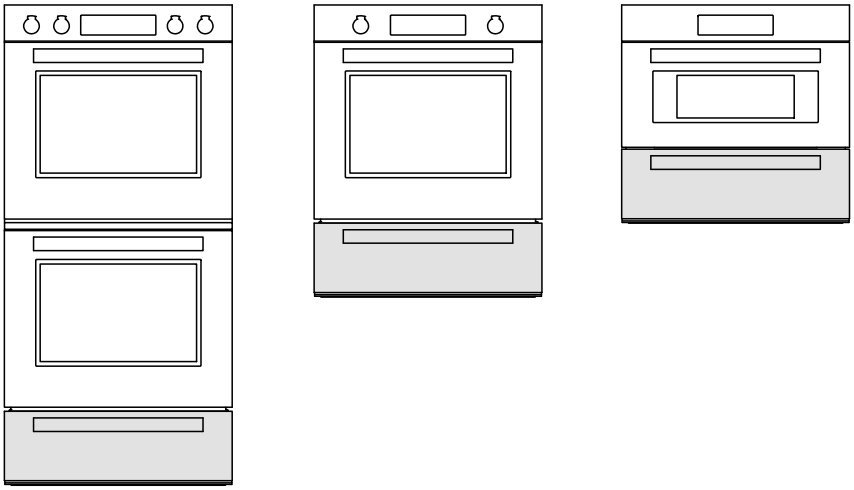

For installation of multiple products in combination, refer to the Design Guide at us.bertazzoni.com or ca.bertazzoni.com

Disclaimer: while every effort has been made to ensure the accuracy of the information contained in this document, Fratelli Bertazzoni reserves the right to change it at any time without notice. For detailed installation instructions, consult the installation manual. Fratelli Bertazzoni, Bertazzoni and the winged wheel brand icon are registered trademarks of Bertazzoni Spa.