Life's Good

OWNER'S MANUAL

DISHWASHER

Read this owner's manual thoroughly before operating the appliance and keep it handy for reference at all times.

ENGLISH

LDFN343**

MFL69261733
Rev.03_020121

www.lg.com

Copyright © 2020-2021 LG Electronics Inc. All Rights Reserved.

TABLE OF CONTENTS

3 IMPORTANT SAFETY INSTRUCTIONS

3 READ ALL INSTRUCTIONS BEFORE USE
3 WARNING STATEMENTS
6 CAUTION STATEMENTS

7 PRODUCT OVERVIEW

7 Product Features

9 INSTALLATION

9 Before Installing
10 Preparing Cabinet Opening
11 Preparing Water and Electrical Connections
12 Preparing Dishwasher
13 Sliding Dishwasher into Cabinet Opening
14 Connecting Water Supply Line and Power
16 Connecting the Drain Hose
17 Leveling Dishwasher
19 Securing Dishwasher in Cabinet Opening
19 Final Installation Check

21 OPERATION

21 Before Using
23 Control Panel
24 Wash Cycles
24 Options and Extra Functions
26 Loading the Dishwasher
26 Loading the Silverware Basket
27 Loading the Lower Rack
28 Loading the Upper Rack
30 Adding Cleaning Products

33 SMART FUNCTIONS

33 LG ThinQ Application
33 Smart Diagnosis™ Function

34 MAINTENANCE

34 Cleaning and Care

37 TROUBLESHOOTING

37 Before Calling for Service

43 LIMITED WARRANTY

43 USA

IMPORTANT SAFETY INSTRUCTIONS

READ ALL INSTRUCTIONS BEFORE USE

Safety Messages

Your safety and the safety of others are very important.

We have provided many important safety messages in this manual and on your appliance. Always read and follow all safety messages.

This is the safety alert symbol.

This symbol alerts you to potential hazards that can kill or injure you and others. All safety messages will follow the safety alert symbol and either the word WARNING or CAUTION.

These words mean:

WARNING

You may be killed or seriously injured if you do not follow instructions.

CAUTION

You may be injured or cause damage to the product if you do not follow instructions.

All safety messages will tell you what the potential hazard is, tell you how to reduce the chance of injury, and tell you what may happen if the instructions are not followed.

WARNING STATEMENTS

WARNING

- To reduce the risk of explosion, fire, death, electric shock, scalding or injury to persons when using this product, follow basic precautions, including the following:

Installation

- Connect to a properly rated, protected, and sized power circuit to avoid electrical overload.
- To reduce the risk of severe injury or death, follow all installation instructions.
- The appliance must be installed and electrically grounded by qualified service personnel in accordance with local codes.
- Disconnect the power supply line, house fuse or circuit breaker before installing or servicing the appliance.
- When moving or installing the product in a different location, call qualified service personnel for installation and service.
- Keep packing materials out of the reach of children. Packaging material can be dangerous for children. There is a risk of suffocation.
- Moving or installation of the appliance requires two or more people.
- This appliance is not designed for maritime use or for mobile installations such as in RVs, trailers, or aircraft.
- Store and install the appliance where it will not be exposed to temperatures below freezing or exposed to outdoor weather conditions.
- This appliance must be positioned near to an electrical power supply.
- Do not, under any circumstances, cut or remove the ground from the power supply line.

- When installing or moving the appliance, be careful not to pinch, crush, or damage the power supply line.
- Do not install the appliance in humid spaces.
- Destroy the carton, plastic bag, and other packing materials after the appliance is unpacked. Children might use them for play. Cartons covered with rugs, bedspreads, or plastic sheets can become airtight chambers.
- Never attempt to operate this appliance if it is damaged, malfunctioning, partially disassembled, or has missing or broken parts, including a damaged power supply line.
- Adhere to all industry recommended safety procedures including the use of long-sleeved gloves and safety glasses.
- The installer must ensure that the dishwasher is completely enclosed at the time of installation.
- Use new hoses when connecting the appliance to the water supply. Do not reuse old hoses.
- After installing, check the hose connection for leaks.
- Do not damage or place heavy items on the power supply line of the appliance.

Operation

- Repair or immediately replace all power supply lines that have become frayed or otherwise damaged. Do not use a power supply line that shows cracks or abrasion damage along its length or at either end.
- If you detect a strange sound, a chemical or burning smell, or smoke coming from the appliance, unplug it immediately, and contact an LG Electronics customer information center.
- Never unplug the appliance by pulling on the power supply line.
- Do not use an extension cable or adapter with this appliance.
- Do not grasp the power supply line or touch the appliance controls with wet hands.
- Do not modify or extend the power cable.
- If the product has been submerged, contact an LG Electronics customer information center for instructions before resuming use.
- Do not store or use gasoline or other flammable vapors and liquids in the vicinity of this or any other appliance.
- Keep the area underneath and around your appliances free of combustible materials (lint, paper, rags, etc.), gasoline, chemicals and other flammable vapors and liquids.
- This appliance is not intended for use by persons (including children) with reduced physical, sensory or mental capabilities, or lack of experience and knowledge, unless they have been given supervision or instruction concerning the use of the appliance by a person responsible for their safety.
- If the electrical supply line is damaged, it must only be replaced by the manufacturer or its service agent or a similar qualified person in order to avoid a hazard.
- Do not abuse, sit on, or stand on the door of the appliance.
- Read all instructions before using the appliance and save these instructions.
- Use this appliance only for its intended purpose.
- Do not allow children to play on, in or with the appliance. Close supervision of children is necessary when the appliance is used near children.
- Do not tamper with controls.
- In the event of a gas leak (propane gas, LP gas, etc.) do not operate this or any other appliance. Open a window or door to ventilate the area immediately.
- Under certain conditions, hydrogen gas may be produced in a hot-water system that has not been used for two weeks or more. HYDROGEN GAS IS EXPLOSIVE. If the hot-water system has not been used for such a period, before using the appliance turn on all hot water faucets and let the water flow from each for several minutes. This will release any accumulated hydrogen gas. As the gas is flammable, do not smoke or use an open flame during this time.

- Fix the drain hose securely in place.
- Use only detergents or wetting agents recommended for use in a dishwasher and keep them out of the reach of children.
- Do not let children eat detergent or dishwasher rinse agent.
- When loading items to be washed:
  - Locate sharp items so that they are not likely to damage the door seal.
  - Load sharp knives with the handles up to reduce the risk of cuts or other injuries.
- Do not wash plastic items unless they are marked "dishwasher safe" or the equivalent. For plastic items not so marked, check the manufacturer’s recommendations.
- Do not touch the HEATING ELEMENT during or immediately after use.
- Do not operate your dishwasher unless all ENCLOSURE panels are properly in place.
- Do not abuse, sit on, or stand on the door or dish rack of the dishwasher.
- Do not install or store the dishwasher where it will be exposed to weather conditions.
- After cleaning the dishes, turn off the water supply. Before cleaning, turn the water supply back on and check the connections.
- Do not open the appliance door while it is operating. For safety reasons, the drain pump operates if the door is opened, resulting in a longer cycle time.
- Be careful not to catch your hand when closing the door of the product.
- Do not plug the dishwasher into a damaged outlet.
- Do not install or keep the dishwasher near electrical components or exposed flames.
- Do not wash dishes exposed to gasoline, solvents or other flammable materials.
- When cleaning, do not spray water on the product directly.
- Do not press buttons with a sharp object such as an awl or pin.
- Do not use solvent-based detergent.
- Do not come into contact with the steam outlet.
- Small parts, such as rack clips and filter retaining posts can be a choke hazard to small children if removed from the dishwasher. Keep out of reach of small children.

Maintenance

- Do not repair or replace any part of the appliance. All repairs and servicing must be performed by qualified service personnel unless specifically recommended in this Owner’s Manual. Use only authorized factory parts.
- Do not disassemble or repair the appliance by yourself.
- Remove any dust or foreign matter from the power supply line.
- Disconnect this appliance from the power supply before cleaning and attempting any user maintenance. Turning the controls to the OFF position does not disconnect this appliance from the power supply.
- Remove the door before the appliance is removed from service or discarded to avoid the danger of children or small animals getting trapped inside.
- Unplug the appliance before cleaning to avoid the risk of electric shock.
- Before discarding the appliance, cut off the power supply line and destroy the appliance's control panel.

Grounding Instructions

- For a permanently connected dishwasher: This appliance must be connected to a grounded metal, permanent wiring system, or an equipment-grounding conductor must be run with the circuit conductors and connected to the equipment-grounding terminal or lead to the appliance.
- Connect the ground wire to the green ground connector in the terminal box.

Tip Over Hazard

- Do not use the dishwasher until completely installed.
- Do not push down on the open dishwasher door.
- Failure to follow these instructions may result in serious injury or cuts.

CAUTION STATEMENTS

⚠ CAUTION

- To reduce the risk of minor or moderate injury to persons, malfunction, or damage to the product or property when using this product, follow basic precautions, including the following:

Installation

- Install the product on a firm and level floor.
- This dishwasher must be connected to a hot water supply with a temperature range between 120 °F (49 °C) and 149 °F (65 °C). This temperature range provides the best washing results and shortest cycle time. The temperature should not exceed 149°F (65 °C) to prevent damage to dishes.
- Do not put the drain hose under the dishwasher during installation.

Operation

- Do not place objects on top of the appliance.
- Turn off the water faucets and unplug the appliance if the appliance is to be left for an extended period of time, such as during vacations.
- Do not store or spill liquid detergents, cleaners, or bleaches (chlorine bleach, oxygen bleach) on the appliance. Doing so may result in corrosion, discoloration or damage to the surface of the appliance.
- Do not touch draining water which may be hot.
- If the drain hose and the water supply hose are frozen in winter, defrost before using the appliance.
- Do not put hands, feet, or metal objects below or behind the appliance.

Maintenance

- If cooking oil is spilled on the exterior of the product, wipe it off immediately. Do not clean the exterior of the product with cleaners which contain alcohol, thinners, bleach, benzene, flammable liquids, or abrasives. These substances may discolor or damage the appliance.

SAVE THESE INSTRUCTIONS

PRODUCT OVERVIEW

Product Features

The images in this guide may be different from the actual components and accessories, which are subject to change by the manufacturer without prior notice for product improvement purposes.

NOTE

- For your safety and for extended product life, use only authorized components. The manufacturer is not responsible for product malfunction or accidents caused by the use of separately purchased unauthorized components or parts.
- Do not remove the safety cover at any time.
- To ensure reliability, each LG dishwasher goes through thorough quality control before it leaves the factory.
- You may find water droplets or water spots from this process inside your new dishwasher.

Front View

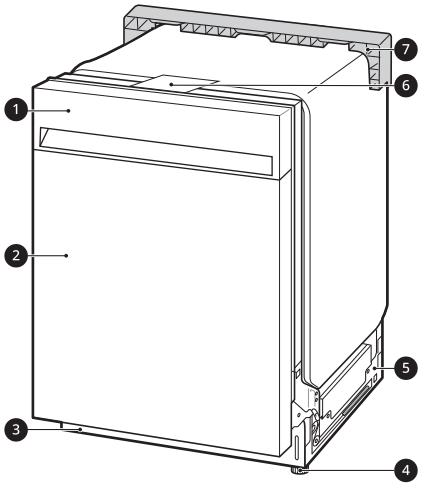

1. Control Panel & Door Handle
2. Front Cover
3. Lower Cover
4. Leveling Feet
5. Base
6. Safety Cover
7. Shipping Brace

Interior View

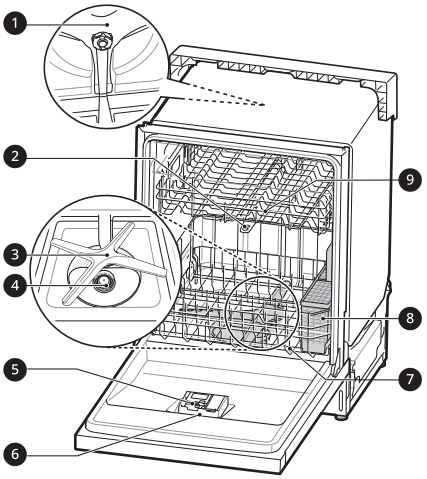

1. Top Wash Impeller
2. Upper Spray Arm
3. Lower Spray Arm
4. Filtration System
5. Detergent and Rinse Aid Dispenser
6. Drying Vent Cover
7. Lower Rack
8. Silverware Basket
9. Upper Rack

NOTE

- The silverware basket ships installed at the back of the bottom rack. For best performance, install it along the right side.

NOTE

- Remove all packing materials from the exterior and interior of the dishwasher before installing the appliance.
- Press the tab to remove the cable tie by hand. Cutting the tie with a knife or scissors may damage the rack or the silverware basket.

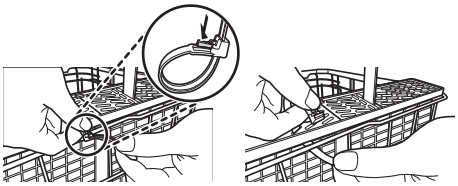

Accessories



1. Installation Brackets (2 ea)
2. Wood Screws (4 ea)
3. Hose Clamp

Product Specifications

The appearance and specifications listed in this manual may vary due to constant product improvements.

Model	LDFN343**
Electrical Requirements	120 V, 60 Hz AC only, minimum 15 A circuit breaker
Min. / Max. Water Pressure	20 psi - 80 psi (140 kPa - 550 kPa)
Dimensions (Width X Depth X Height)	23 3/4” X 24 5/8” X 33 5/8” (603 mm X 625 mm X 854 mm)
Inlet Water Temperature	120 °F (49 °C) minimum, 149 °F (65 °C) maximum
Net Weight	70 lbs. (31.8 kg)

INSTALLATION

Before Installing

Parts not Provided

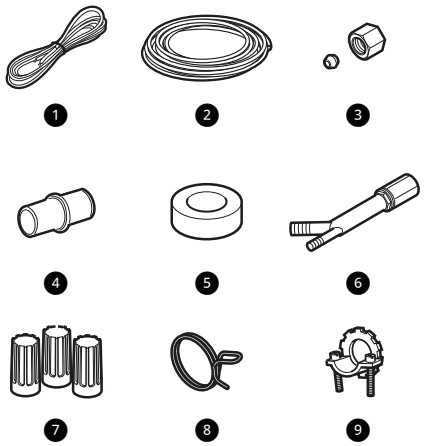

1. Electrical Cable
2. Water Supply Tube
3. Fittings for Tube
4. Coupler
5. Electrical Tape
6. Air Gap
7. Wire Nuts for 16-Gauge Wiring
8. Hose Clamp
9. UL Approved Strain Relief

Tools Needed

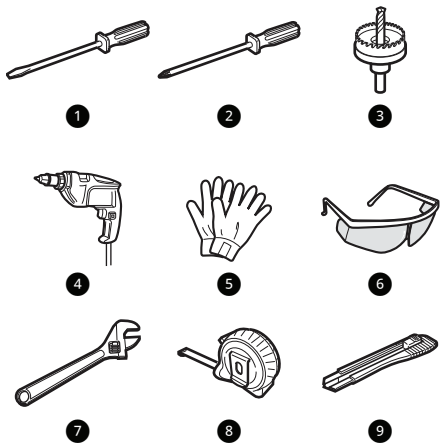

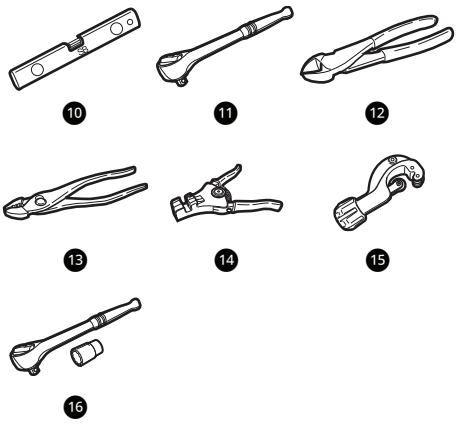

1. Flat-Blade Screwdriver
2. Phillips Screwdriver
3. Hole Saw min. 2 1/2” bit
4. Electric Drill
5. Gloves
6. Safety Glasses
7. Adjustable Wrench
8. Tape Measure
9. Utility Knife
10. Level
11. 1/4” Square Drive Wrench
12. Nipper
13. Pliers
14. Wire Stripper
15. Tubing Cutter
16. 3/8” Square Drive Wrench + 1/2” Socket

Installation Overview

Please read the following installation instructions first after purchasing this dishwasher or transporting it to another location.

1. Preparing Cabinet Opening
2. Preparing Water and Electrical Connections
3. Preparing Dishwasher

❹ Sliding the Dishwasher into Cabinet Opening

❺ Connecting Water Supply Line and Power

❻ Connecting the Drain Hose

❼ Leveling the Dishwasher

❽ Securing Dishwasher in Cabinet Opening

❾ Final Installation Check

Product Dimensions

Back View

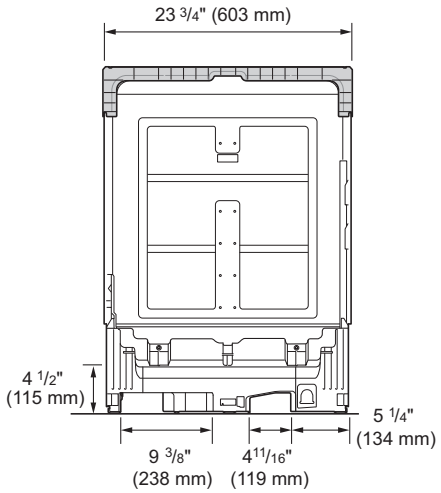

Side View

For easiest installation, see marked areas ❶ for water and electrical clearances in base of dishwasher. Water supply hose, drain hose and electric cable should be passed through this area.

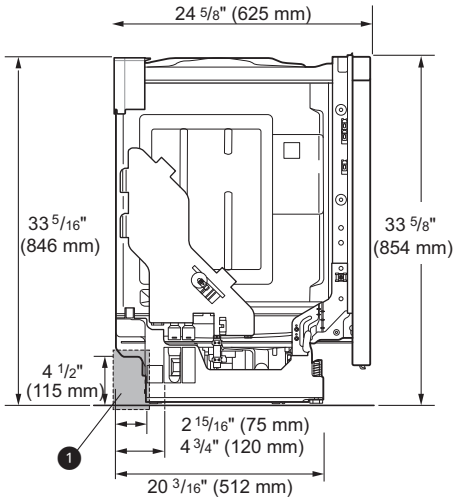

Preparing Cabinet Opening

This dishwasher is designed to fit a standard dishwasher opening. An opening may be needed on both sides to route plumbing and electrical connections.

- To ensure proper drainage, install the dishwasher no more than 12 ft. (3.65 m) from the sink.
- The location must have sufficient space for the dishwasher door to open easily and provide at least 0.1" (2 mm) between the dishwasher and the cabinet sides.
- If installing the dishwasher in a corner, leave a minimum of 2" (50 mm) between the dishwasher and the adjacent wall.
- The adjacent wall must be free of obstructions.
- For flush installations only, you may remove the cabinet brace ❶ inside the cabinet.

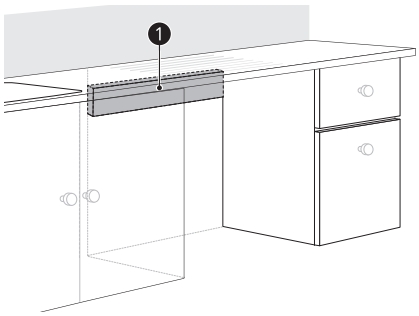

Choosing the Proper Location

1 Select a location as close to the sink as possible for easy connections to water supply line, drain hose and electrical connection.

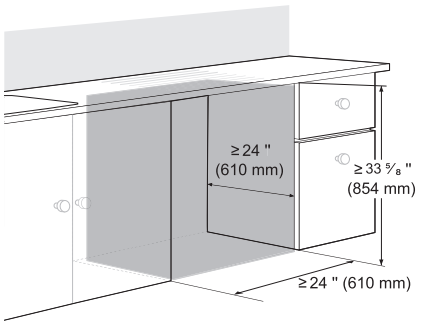

2 To allow for proper clearance of plumbing and electrical, use the template included with the literature to determine the clearance on the side of the cabinet where the cabinet meets the back wall. Using a 2 1/2" diameter hole saw, drill a hole in the target area as shown on the template.

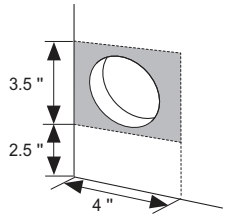

⚠ WARNING

- Installation damage is not covered by the warranty, and leaks caused by improper installation may result in property damage.
- Do not use existing holes unless they are in the target area.
- Failure to properly locate the hole for the water and drain lines may prevent the dishwasher from installing flush with the cabinets and could result in kinked, pinched, crushed, stressed or damaged lines.

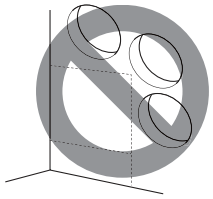

Preparing Water and Electrical Connections

⚠ WARNING

- Water Connection
  - Do not reuse an old hose. Use only a new hose when installing the dishwasher. The old hose could leak or burst causing flooding and property damage. Contact an LG Customer Information Center for assistance in buying a new hose.
- Electrical Connection
  - Use a time-delay fuse or circuit breaker.
  - Operate this appliance with the correct voltage as shown in this manual and on the rating plate.
  - The wiring must be grounded properly. If in doubt, have it checked by a qualified electrician.
  - Connect the appliance using 3-wires, including a ground wire.
  - The appliance and outlet must be positioned so that the plug is easily accessible.
  - Do not use an extension cable or adapter with this dishwasher.
  - Do not overload the outlet with more than one appliance.
  - The included 16AWG wire nuts should be used.
  - It is the personal responsibility and obligation of the product owner to have a proper outlet installed by a qualified electrician.

⚠ CAUTION

- When connecting the dishwasher water supply line to the house water supply, sealing tape or compound should be used on pipe threads to avoid leaks. Tape or compound should not be used on compression fittings.
- Connect the dishwasher to a hot water supply with a temperature range between 120 °F (49 ℃) and 149 °F (65 ℃). This temperature range provides the best washing results and shortest cycle time. To prevent damage to dishes, the temperature should not exceed 149 °F (65 ℃).
- Water supply pressure must be between 20 psi and 80 psi (140–550 kPa). If the water supply pressure exceeds 80 psi, a pressure reducing valve must be installed. Otherwise premature failure of the inlet valve may occur.

Routing Water Supply Line and Electrical Wiring

There are 2 channels in the bottom of the dishwasher for routing the water and electrical connections.

- As shown in the bottom view below, channel ❶ is for the water supply line, and channel ❷ is for the electrical cable.

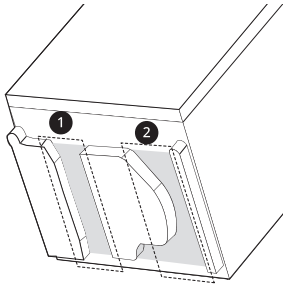

1 Turn off the house water supply and the circuit breaker or dedicated power before connecting the dishwasher.

2 Run the water supply line along the floor 6 1/2" – 7 3/4" (165 mm – 197 mm) from the left

side of the opening and tape it in place in front of the opening.

3 Run the electrical cable ❸ along the floor 14" – 16" (356 mm – 406 mm) from the water supply line ❹ and tape it in place.

- The electrical outlet must be within 4 ft. (1.22 m) of either side of the dishwasher.
- The best location for the electrical conduit is on the right side of the back wall. Re-route the electrical cable before installation if the electrical conduit pipe is longer than 3" (76 mm) and is centered on the back wall.

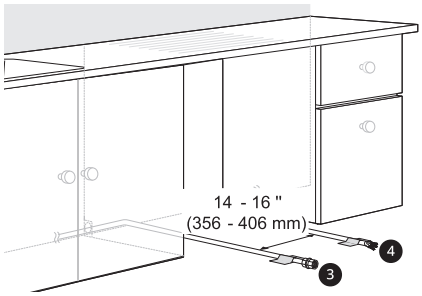

Preparing Dishwasher

⚠ WARNING

- Do not remove safety cover. Removal can result in fire, electric shock or death.

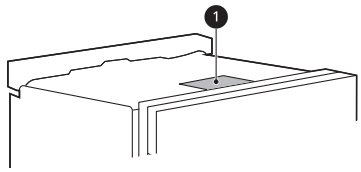

Releasing Drain Hose

Remove the twist tie holding the drain hose to the back of the shipping brace.

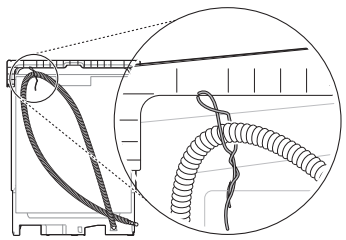

Removable Shipping Brace

The rear shipping brace can be removed if additional clearance is needed when installing the dishwasher under a low countertop.

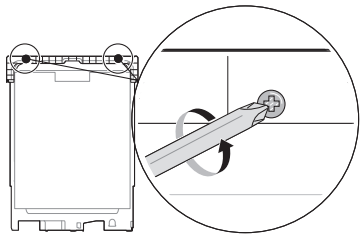

Removing Lower Cover

⚠ CAUTION

- If you lay the dishwasher on its back, do so carefully to avoid damaging the drain hose and the tub.

1 Remove the screws at either side which attach the lower cover to the dishwasher.

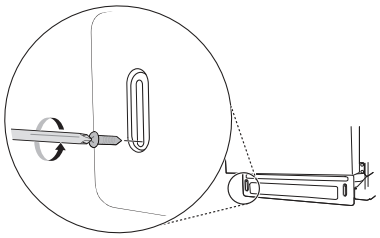

2 Remove the lower cover.

3 If there is insulation padding behind the lower cover, remove it.

4 Set the parts aside until the installation is complete.

Removing Packing Materials from the Interior

Remove all packing materials from the interior of the dishwasher before installing the appliance.

Attaching Installation Brackets

For countertops made of wood or other materials that will not be damaged by drilling, use the metal installation brackets provided.

For countertops made of granite, marble, or other materials that could be damaged by drilling, use the wood screws to attach the dishwasher to the cabinet. See installation instructions in **Securing Dishwasher to Cabinet Opening**.

NOTE

- Installation brackets and screws can be found in the silverware basket.

1 Insert the tabbed end of the installation brackets into the slots in the upper frame. Rotate the brackets until the tabbed ends are facing up.

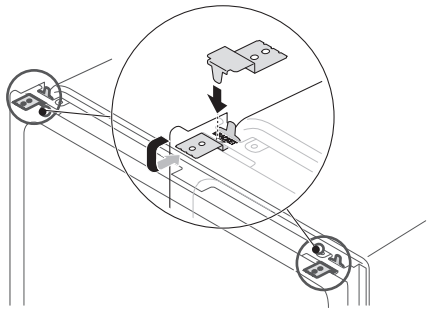

2 Bend the tabs on the brackets to secure them to the frame using a pair of needle nose pliers.

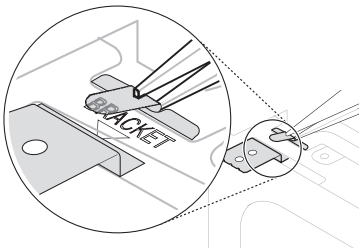

Sliding Dishwasher into Cabinet Opening

How to Slide Dishwasher

⚠ CAUTION

- Do not pull or lift the dishwasher using the handle ❶. Doing so can damage the door and hinges.

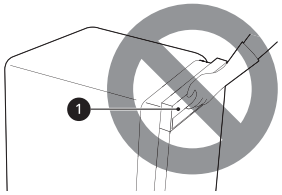

- Do not push the door of the dishwasher with knees when sliding the dishwasher into position. Doing so can damage the front cover.



- Do not push the top of the dishwasher. Doing so can damage the interior of the dishwasher.

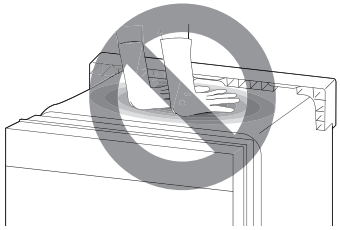

NOTE

- Open the door and grab the body frame and the top front opening ❷ of the tub to move or lift the dishwasher.

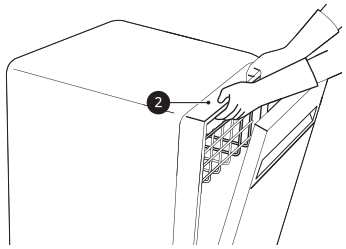

1 Align the dishwasher with the opening. Make sure the water supply line and electrical cable are in the correct positions to slide into their channels properly.

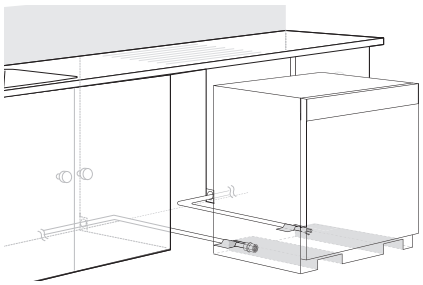

2 Smooth out or pad the edges of the hole drilled for the water supply to avoid damaging the drain hose.

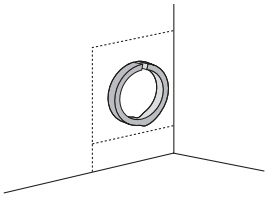

3 Make sure the drain hose is straight before feeding the end of it through the hole for the water supply. As you slide the dishwasher into the opening, you will want to slowly pull on the drain hose from inside the cabinet to take up some slack. Be careful not to kink, pinch, crush or stress the drain hose during installation to avoid leaking and water damage.

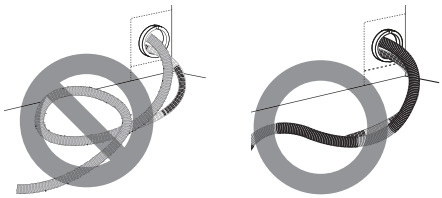

4 Gradually slide the dishwasher into the opening, making sure that the water supply line and electrical cable are passing freely through the channels and do not get caught under the dishwasher.

⚠ CAUTION

- To avoid malfunctions or leakage, it is important that the drain hose not get kinked, pinched, stressed or crushed behind or under the dishwasher or inside the neighboring cabinet.
- Damage resulting from improper installation is not covered under the warranty.

  - As you slide the dishwasher into the opening, stop periodically (or have an assistant help) to take up the slack by pulling the drain hose farther into the cabinet.

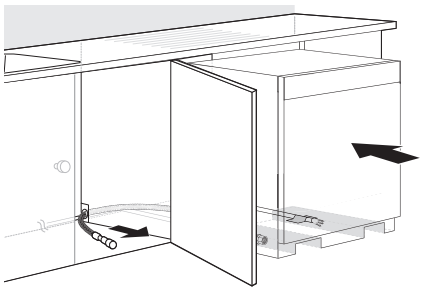

5 Remove the tape from the water supply line and the electrical cable.

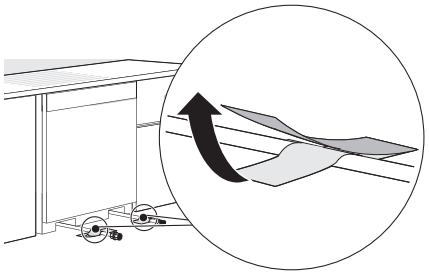

Connecting Water Supply Line and Power

Connecting Water Supply Line

1 With the home water supply turned off, connect the water supply line to the inlet valve on the left front of the dishwasher.

⚠ CAUTION

- Tape or compound should not be used on dishwasher inlet valve.

2 Tighten the compression nut.

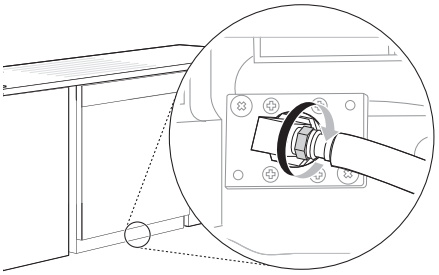

3 Slide the water supply line back through the channel, pulling gently from inside the cabinet to make sure the line is not kinked, pinched, stressed or crushed.

Connecting Power

The dishwasher should have a dedicated properly grounded branch circuit to connect the 3 wire setup which includes the ground wire.

If a 3-prong power supply is used, it should be in an accessible location adjacent to the dishwasher

within 4 ft. (1.22 m) of the dishwasher side and not behind the dishwasher.

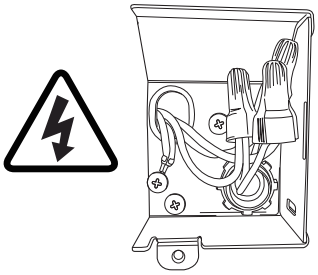

NOTE

- The best location for the electrical conduit is on the right side of the back wall. Re-route the electrical cable before installation if the electrical conduit pipe is longer than 3” (76 mm) and is centered on the back wall.

1 Turn off electrical power to the unit at the circuit breaker.

2 Use a Phillips screwdriver to remove the screw from the junction box cover and remove the cover.

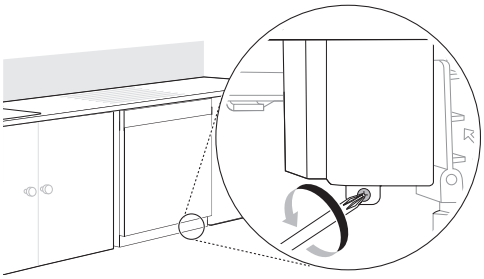

3 Use a Phillips screwdriver to remove 2 screws ❶.

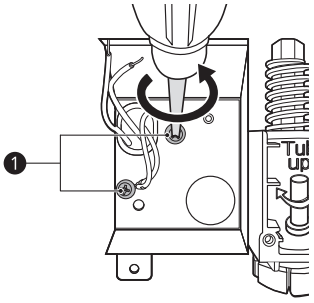

4 Remove the junction box from the appliance.

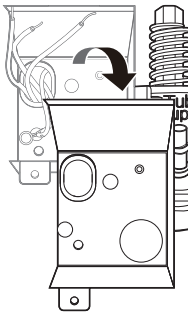

5 Insert a strain relief ❷ through the hole in the junction box. Tighten the ring nut ❸ to secure it in place.

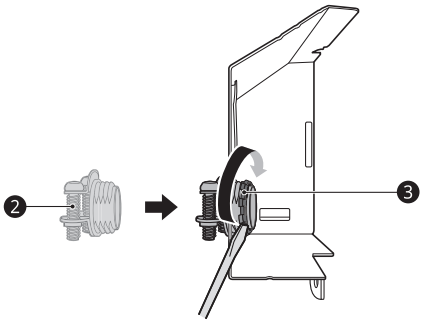

6 Insert the electrical cable through the hole in the strain relief. Tighten 2 screws to secure the cable.

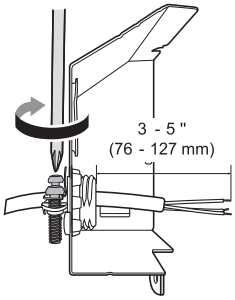

7 Pull the existing wires through the openings in the junction box. Tighten 2 screws ❹ to reassemble the junction box in the appliance.

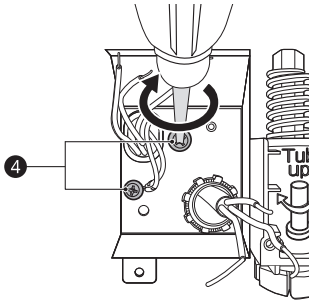

8 Pair the white, black, and green wires to the matching colored wires from the dishwasher. Then twist on the provided wire nuts ❺ tightly to connect the corresponding wires.

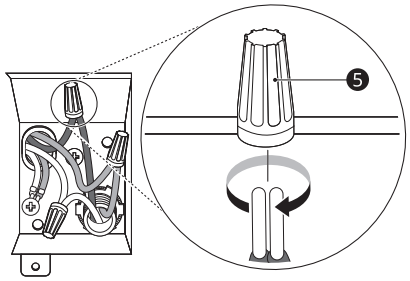

9 Wrap electrical tape ❻ around each connection.

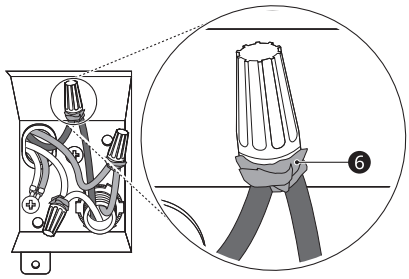

10 Fold the connected wires back into the junction box and screw on the junction box cover.

⚠ WARNING

- Verify that the black wire is hot (120 V). If not, or if you are unsure of the power supply, have it checked by a licensed electrician.

Connecting the Drain Hose

If the end of the drain hose does not fit the drain line, use a heat and detergent resistant adapter (not supplied). These may be obtained from a local plumbing supply store.

- Cut the adapter so the end matches the size of the drain connection.

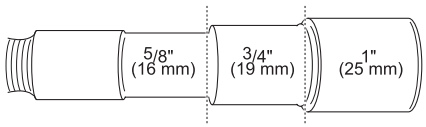

NOTE

- For drain hose installation, use the screw style hose clamp provided with this dishwasher in the silverware basket.
- If connecting the dishwasher's drain hose to the garbage disposal, be sure to follow your garbage disposal's manual for proper installation instructions.

Drain Hose Requirements

- Follow local codes and ordinances.
- Do not exceed 12 ft. (3.65 m) distance to drain.
- Do not connect drain hoses from other appliances to the dishwasher's drain hose.
- If an extension drain hose is required, use a 5/8" or 7/8" inside diameter, 2-3 ft. length hose and a coupler for connecting the two hose ends.

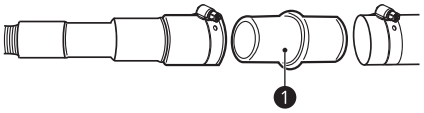

Height of the Drain Hose

The height of the drain hose end must be at least 12" (305 mm) and within 40" (1016 mm) from the base of the dishwasher to avoid water being siphoned from the tub.

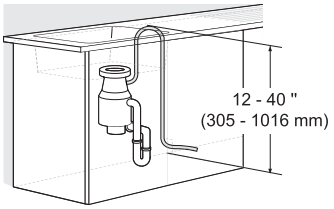

Connecting to Disposal without Air Gap

1 Remove the knockout plug on the disposal with a hammer and screwdriver.

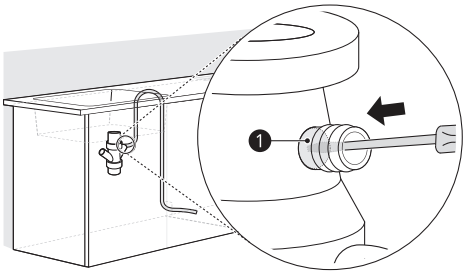

2 Remove the knockout plug ❶ from the disposal.

⚠ WARNING

- If the knockout plug has not been removed, the dishwasher will not be able to drain properly.

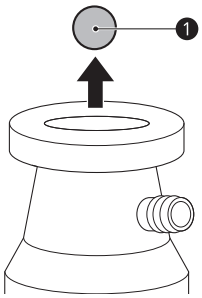

3 Attach the drain hose to the disposal with the hose clamp provided. Move the hose clamp into position and tighten it with a flat-blade screwdriver.

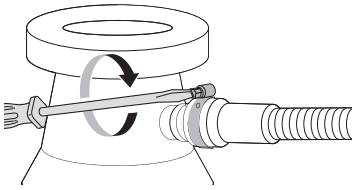

Connecting Waste Tee without Air Gap

The height of the drain hose end must be at least 12" (305 mm) and within 40" (1016 mm) from the base of the dishwasher to avoid water being siphoned from the tub.

1 Remove the knockout plug with a hammer and screwdriver.

⚠ CAUTION

- If the knockout plug has not been removed, the dishwasher will not be able to drain properly.

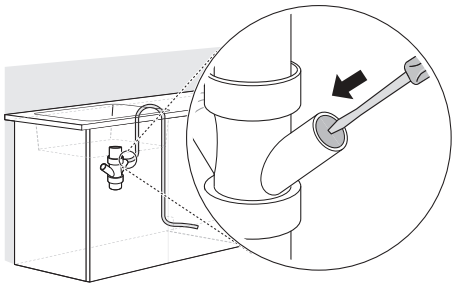

2 Attach the drain hose to the waste tee with the hose clamp provided. Move the clamp into position and tighten it with a flat-blade screwdriver.

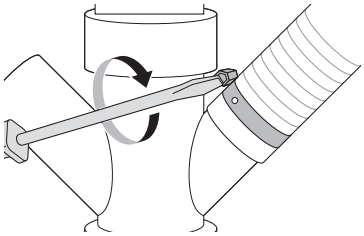

Connecting to Disposal or Waste Tee with Air Gap

1 Remove the knockout plug with a hammer and screwdriver.

2 Connect the end of the drain hose ❶ to the air gap ❷ with the hose clamp provided. Move the clamp into position and tighten it with a flat-blade screwdriver.

- This avoids water being siphoned from the tub.

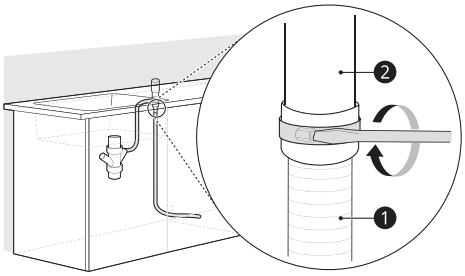

3 If it is not connected, attach the rubber hose connector to the disposal or waste tee with a hose clamp (not provided).

Leveling Dishwasher

Check that the dishwasher is level and adjust the leveling feet if necessary.

⚠ CAUTION

- Failure to level the dishwasher may result in leakage, problems closing the door, or noise.

- Where the cabinet opening is narrower than recommended (see **Preparing Cabinet Opening**), the dishwasher must be carefully leveled and aligned so that the dishwasher is supported fully by the 3 leveling feet and is not hanging from the installation brackets. Failure to do so can result in leaks from the front of the dishwasher, AE errors, difficulty in closing the door, or failure to operate.

Checking Leveling

To check that the tub is level from front to back, remove the lower rack and pour 169 oz. (5 L) of water into the bottom of the tub. The water level should be near the center of both tub lower indentations at the front.

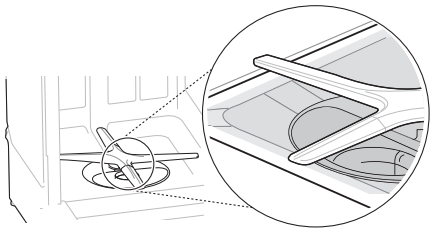

With the lower rack removed, place a level on the inside wall of the tub to check that the dishwasher is level from side to side.

- If you do not have a level, try using a smartphone level application instead.

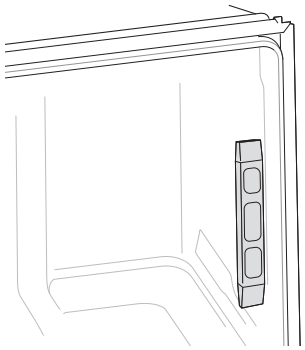

Make sure that the gap between the tub walls and the door liner is the same on either side.

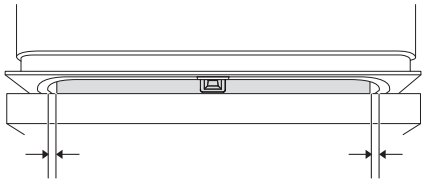

Adjusting Leveling Feet

Adjust as needed until the dishwasher is completely leveled.

- Adjust the front and rear leveling feet until they are all in firm contact with the floor. Failure to level the dishwasher may prevent the door from closing properly and the dishwasher will not turn on.

Adjusting Front Leveling Feet

Use a flat-blade screwdriver to turn the front leveling feet and adjust the front of the tub.

- Turn the front leveling feet clockwise to raise the front of the tub and counterclockwise to lower it.

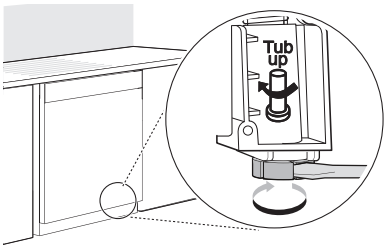

- The adjustments work identically for both front leveling feet.
- When a flat-blade screwdriver is unavailable, use a 1/4" square drive wrench ❶ or 3/8" square drive wrench ❷ with 1/2" socket ❸ to turn the front leveling feet and adjust the front of the tub.

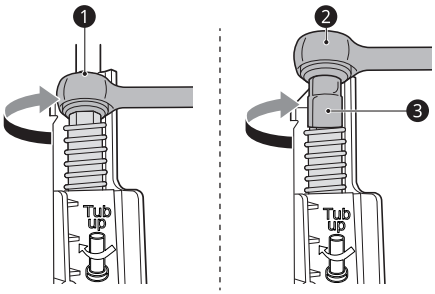

Adjusting Rear Leveling Foot

Use a Phillips screwdriver to adjust the rear leveling foot and the rear of the tub using the center screw at the base of the appliance in the front.

- Turn the center screw clockwise to raise the rear of the tub and counterclockwise to lower it.

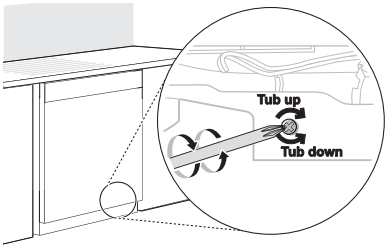

NOTE

- To avoid damaging the screw, do not use an electric screwdriver.

Securing Dishwasher in Cabinet Opening

There are 2 options for securing the dishwasher. If the countertop is made of wood or a material that can safely be drilled into, secure the dishwasher to the countertop with the provided brackets. If the countertop is granite, marble, or a material that cannot be drilled into, secure the dishwasher to the cabinet frame with the provided wood screws.

⚠ CAUTION

- Ensure the dishwasher is level and all leveling feet are in firm contact with the floor before attaching the dishwasher to the countertop or cabinet. If the dishwasher is not leveled properly, the door may not close properly or water may leak.

NOTE

- Installation brackets and screws can be found in the silverware basket.
- Use a magnetic screwdriver.
- Cover the filter hole with towels to prevent screws from falling down into the pump.

Securing Dishwasher to Countertop

Use the bracket screws provided to secure the brackets at the top of the dishwasher to the underside of the wood countertop.

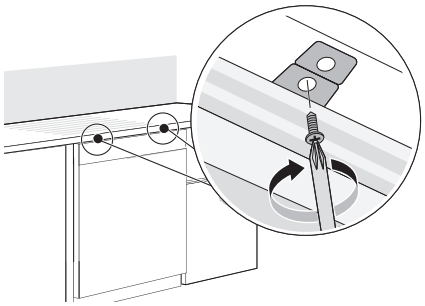

Securing Dishwasher to Cabinet Frame

If desired, the dishwasher can also be secured to the cabinet frame using the instructions which follow.

1 Remove the 2 plastic caps from the mounting bracket access holes.

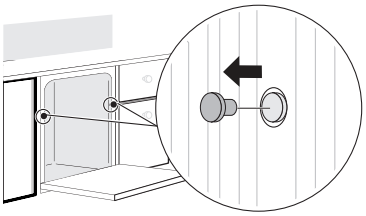

2 Drive a wood screw through the mounting bracket and into the cabinet frame.

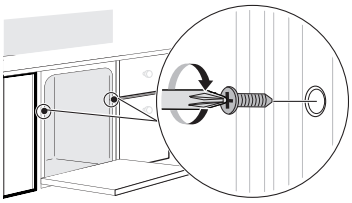

3 Reinstall the plastic caps.

Final Installation Check

Testing the Dishwasher

Check if the dishwasher is properly installed.

1 Turn on the circuit breaker.

2 Turn on the house water supply.

3 Make sure that the door opens and closes smoothly.

- If necessary, level the dishwasher again.
- If the door will not close, make sure the rack is level.

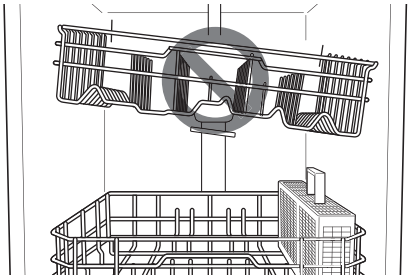

- Make sure that all packaging materials have been removed.

4 Power on the dishwasher and run a **Turbo** cycle to verify proper operation.

5 Check for leaks at the drain hose and water supply connection.

6 If a water leak is detected, press and hold the **Start** button for 3 seconds to cancel the wash cycle and automatically drain the water from the dishwasher. Tighten all water connections and run another cycle. Repeat until no leaks are detected.

7 Replace the lower cover.

⚠ CAUTION

- Only install the lower cover provided with the dishwasher. Do not install cabinet baseboard ❶ as it may cause noise and leakage.

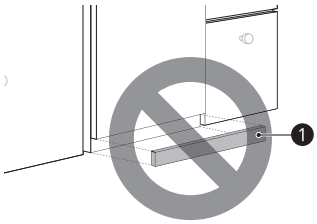

Installation Check Error Codes

Refer to the chart below before calling for service.

Error Code	Possible Cause and Solution
OE	**Drain hose is kinked or pinched.** • Feed the drain and water supply hoses through the hole under the sink. Then gradually slide the dishwasher into the cabinet while pulling on the hoses under the sink to take up any slack. This helps avoid kinking the hoses or trapping them beneath the dishwasher. **Drain hose is connected to the disposal without removing the knockout plug.** • Remove the knockout plug from the disposal. **Waste tee or disposal is clogged.** • Remove knockout plug on the waste tee or disposal.
IE	**Water supply line is kinked under dishwasher.** • Feed the drain and water supply hoses through the hole under the sink. Then gradually slide the dishwasher into the cabinet while pulling on the hoses under the sink to take up any slack. This helps avoid kinking the hoses or trapping them beneath the dishwasher. **House water supply is not turned on.** • Turn the water faucet on.

OPERATION

Before Using

⚠ WARNING

- To reduce the risk of fire, electric shock, or injury to persons, read the **SAFETY INSTRUCTIONS** before operating this appliance.

NOTE

- Connect to the hot water supply only. The water supply temperature should be a minimum of 120 °F (49 °C) for better washing performance and shorter cycle time.
- Follow the instructions for loading the dishwasher to ensure effective cleaning.
- Remove insoluble items such as bones, toothpicks, and pieces of paper while loading the dishwasher.

Quick Start

1 Load the dishes.

- Pull each rack out and load the dishes as described in this manual.
- Only load items that are dishwasher-safe.
- Scrape the dishes free of excess food, bones, and any other hard, non-soluble residue. Remove solid, burned-on scraps from dishes prior to loading in the dishwasher.
- Place items with deep dish bottoms at an angle to help water run off and speed the drying process.
- Do not load items that are not heat-resistant or have decorative metal trim.

2 Measure the detergent.

- Using the guidelines in this manual, fill the detergent cup with the recommended amount of detergent and close the lid. If a prewash is desired, the recess on top of the lid should also be filled with detergent.

3 Close the door.

4 Turn on the dishwasher.

- To turn on the display panel, press the **Power** button.

5 Check the rinse aid.

- The **Rinse Aid** ✳ icon will flash if the level of rinse aid in the dishwasher is low. Add rinse aid if the level is low to maintain the effectiveness of the dry cycle.

6 Select the cycle and options.

- Select the cycle and options that best fit the load by referring to the **Cycle Guide**. The display will show the estimated time for the cycle and options selected.

7 Operate the dishwasher.

- **Method 1**
  - Press the **Start** button and then close the door in less than four seconds to operate the dishwasher. If the door is not closed within four seconds, the white LED with time flashes, an audible tone is heard, and the cycle does not start.
- **Method 2**
  - Close the door first and then press the **Start** button to operate the dishwasher.

NOTE

- If the door is opened during the cycle, the dishwasher will stop. To resume the cycle, see methods 1 and 2 above.
- If the door is opened during the cycle and is not closed within four seconds after selecting the **Start** button, or if the door is closed without pressing the **Start** button, the white LED with time flashes, an audible tone is heard, and the cycle does not start.

8 End of cycle.

- When the cycle is complete, a chime will sound and the display will show End until the door is opened or **Power** is pressed. To save energy, press and hold **High Temp** for three seconds to set the End display to automatically turn off a few minutes after the cycle ends.

⚠ CAUTION

- Do not open the door during operation or immediately after it has completed the wash cycle as the escaping steam may cause scalding as the door is opened.

NOTE

- Empty the lower rack first and then the upper rack. This will avoid water dripping from the upper rack onto dishes in the lower rack.

Auto-Off

The dishwasher automatically turns off after four minutes of inactivity if paused or if no cycle is started.

Control Panel

Control Panel Features

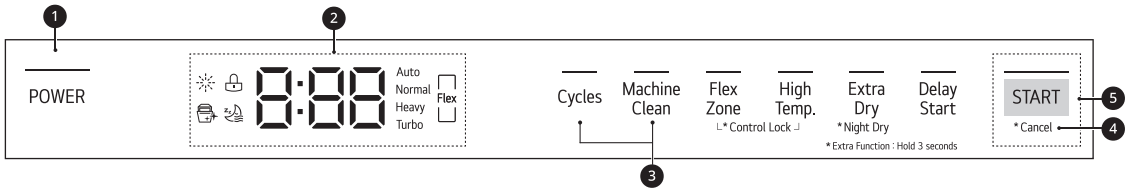

❶ Power On/Off Button

- Press this button to turn the washer on or off.
- If there is a power surge, power outage, or disruption of any kind, power is automatically turned off for safety.
- When power is connected again, the dishwasher will turn on automatically and resume the cycle.

NOTE

- When opening or closing the product door, keep fingers and hands away from the control panel to avoid activating buttons.

❷ Display

- : **Rinse Aid Icon**
  - This icon illuminates when the rinse aid level is low. The LED automatically shuts off when the rinse aid is refilled or the level is set to 0.
  - Refer to the **Rinse Aid Dispenser Adjustment** section.
- 8:88 : **Digital Display**
  - The digital display on the control panel shows the ESTIMATED cycle time. When the cycle and options are selected, the display shows the total estimated time to complete those selections. During operation, the display shows the remaining estimated operating time.

NOTE

- The estimated time shown on the display does not include delay times for heating water, etc.
- If **Delay Start** is selected, the display shows the delay time in hours.
- Cycle time may vary depending on the soil level of your load.

- , CL : **Control Lock**
  - The **Control Lock** feature helps prevent settings from being changed during a cycle. Selecting this feature locks all of the buttons, except for the **Power** button, on the control panel. This feature does not lock the door.
  - While a cycle is running, press and hold **Flex Zone** and **High Temp.** simultaneously for three seconds to activate or deactivate **Control Lock**.
  - To start a new cycle, deactivate **Control Lock**.
- : **Machine Clean**
  - The **Machine Clean** icon flashes every 30 cycles. To activate or deactivate the icon, press and hold the **Machine Clean** and **Flex Zone** buttons for three seconds.
  - If the **High Temp.** option is added to a cycle, the **Machine Clean** icon stays lit at the end of the cycle if the dishes were properly sanitized.
- : **Night Dry**
  - This indicator lights up when **Night Dry** is selected.

❸ **Chime On/Off Button**

- To activate or deactivate the button sounds, press and hold **Cycles** and **Machine Clean** simultaneously for three seconds. The error alert sound cannot be turned off.

❹ **Cancel Button**

- The drain pump activates and the cycle cancels. Once the dishwasher finishes draining, the power turns off.
- Press and hold **Start** for three seconds to activate.

❺ **Start Button**

- To operate the machine, either press **Start** and close the door within four seconds or close the door and press **Start**.
- An alert will sound if the door is closed more than 4 seconds after the **Start** button is pressed.

Wash Cycles

Select your desired cycle.

Selecting the Cycle

The default cycle is **Auto**. You can also customize these settings using the **Cycles** button.

- Press the **Cycles** button repeatedly to select the **Normal**, **Heavy**, or **Turbo** cycle.

Auto

This cycle senses the soil amount and soil toughness and is optimized to achieve the best cleaning.

Normal

This cycle is for moderately soiled, everyday loads. Select the **Night Dry** option if leaving dishes overnight. Press and hold **Extra Dry** for three seconds to activate **Night Dry**.

- After the cycle ends, the fan runs for an hour to help vent the warm, moist air in the tub. You can stop the fan by opening the door after the cycle ends.

Heavy

This cycle is for heavily soiled dishes and dishes with hardened on soil. This cycle defaults to the strongest spray intensity and uses it to wash heavily soiled dishes.

Turbo

This cycle will clean heavily soiled dishes in an hour using slightly more energy and water.

- This cycle does not have drying. Select the **Extra Dry** and **Night Dry** option or another cycle for better drying.

Machine Clean

This cycle is for cleaning the inside of the dishwasher. Use the cycle without dishes in the machine. It eliminates residual soils, odor, white spots, and other dirt. Add citric acid or another cleaning agent for more effective results.

Options and Extra Functions

Select the desired cycle button and then select the options for that cycle.

Using the Flexible Zone

This option adjusts the wash intensity to target different zones inside the dishwasher. Set it to wash just the upper rack or lower rack, or set the intensity to soft for the upper spray arm and strong for the lower spray arm.

The **Flex Zone** is off by default. Press the **Flex Zone** button to customize settings.

- Press the **Flex Zone** button repeatedly to select the 4 modes for cleaning the dishes.

Mode	Description
	Small loads & light soil • Use just the upper rack to save energy and time.
	Small loads & heavy soil • Use just the lower rack to save energy and time.
	Small loads & heavy soil & light/sensitive dishes • Focus on lower rack, but also operate lightly to wash some light or sensitive dishes in the upper rack.

Mode	Description
	Various conditions • Place heavily soiled dishes like plates and bowls in the lower rack and lightly soiled dishes like cups and small plates in the upper rack to get the best results.

High Temp

Raises the main wash temperature to improve cleaning.

Extra Dry

Select the **Extra Dry** option for better drying performance. This option adds extra drying time to the cycle and raises the heated rinse temperature.

- When the rinse aid is empty, the **Extra Dry** option is selected automatically.

Night Dry

Dishes are often left in the dishwasher overnight after the cycle ends. This can result in the steam inside the tub condensing on dishes, leaving them wet. This option runs the ventilation fan periodically to help vent the steam from the tub.

- Press and hold **Extra Dry** for three seconds to activate.
- The **Night Dry** option is selected by default for all cycles for which it is available, except the **Normal** cycle.
- To add the **Night Dry** option to the **Normal** cycle, press and hold **Extra Dry** for 3 seconds.

Delay Start

This feature delays the start of a selected cycle. Each time the **Delay Start** button is pressed, the delay time increases by an hour. The delay time can be set from 1 to 12 hours, in one-hour increments.

Cycle/Option Guide

The cycle guide below shows the available options for each cycle.

Cycle		Auto	Normal	Heavy	Turbo	Machine Clean
Soil Level		All levels	All levels	Heavy	Heavy	
Water Usage*	(L)	13.8 - 25	9.2 - 19.5	26.9	27.5	12.3
	(gal)	3.6 - 6.6	2.4 - 5.2	7.1	7.3	3.2
Wash Time with Options (Mins.)**		89 - 192	98 - 190	140 - 214	59 - 121	82
Available Options	**Flex Zone**	●	●	●	●***	
	High Temp.	●	●	●	●	
	Extra Dry	●	●	●	●	
	Night Dry	●****	●	●****	●****	
	Delay Start	●	●	●	●	●

* Actual water consumption will vary depending on soil level and hardness of water.

** The actual running time and cycle time displayed may change depending on options chosen, soil level, water temperature, and hardness of water. Therefore, display time and actual running time can be different.

*** Some **Flex Zone** modes cannot be selected when using the **Turbo** cycle.

**** Default setting

Loading the Dishwasher

The extra tall tub allows loading of dishes, pans, or other utensils up to 14" high. For effective washing performance, always follow these instructions.

- Remove large particles of food debris from plates including bones before loading.
- Items with burnt on food should be soaked prior to loading in the dishwasher.
- Deep pots or dishes should be placed upside down.
- Make sure that all items do not touch each other.

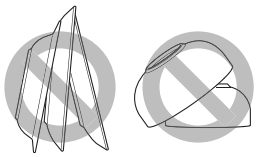

Non-Dishwasher Safe Items

The combination of high water temperature and dishwasher detergents may damage certain items. Do not wash the following items in the dishwasher.

- Copper or anodised aluminum
- Hand painted silver or gold leaf china
- Wood or bone handled utensils
- Iron or non-rustproof utensils
- Plastic items which are not dishwasher safe
- Sterling silver or gold-plated flatware or delicate or metal-rimmed china
- Fragile items such as crystal glasses

⚠ CAUTION

- Do not place pots or pans with plastic handles in the appliance as the handles may deteriorate due to the heat and detergent.
- Waterproof or long-lasting lipstick smudges on glasses may not be removed during the wash.

Loading the Silverware Basket

The silverware basket has separators to avoid scratching and tarnishing of delicate silverware.

Loading Silverware into the Basket

Loading 10 Place Settings

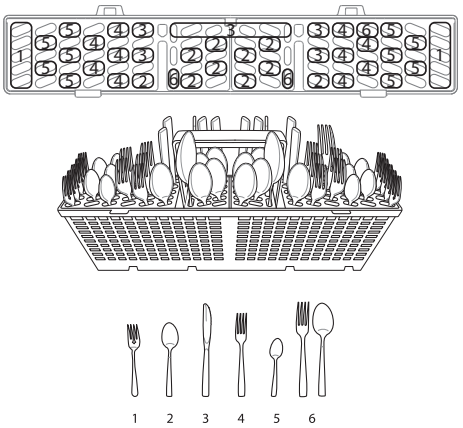

Loading 12 Place Settings

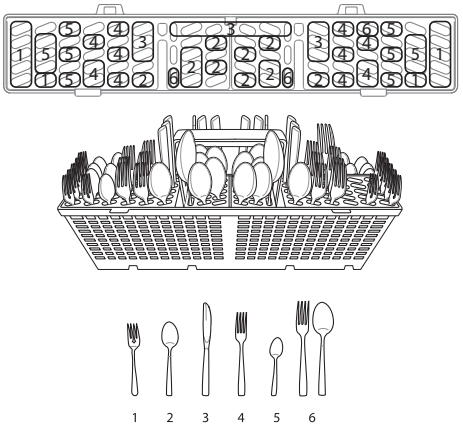

Silverware Loading Tips:

- For best cleaning results, use the top separators in the basket when loading silverware. The separators will prevent nesting of silverware.
- Load sharp items, such as knives, pointing down.
- When unloading the dishwasher, it is best to start with the silverware basket. Doing so will prevent water droplets from falling on your silverware from the upper rack.

⚠ WARNING

- Be careful when loading and unloading sharp items. Load sharp knives with the handles up to reduce the risk of personal injury.

Loading the Lower Rack

Loading Dishes into the Lower Rack

Loading 10 Place Settings

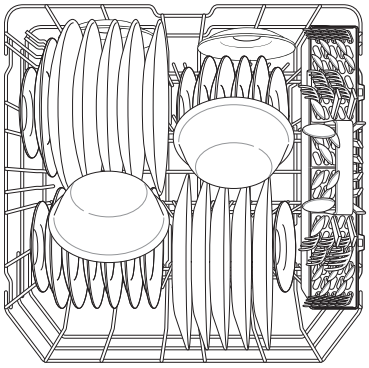

Loading 12 Place Settings

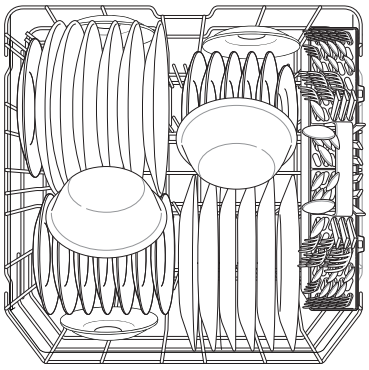

Lower Rack Loading Tips:

- Plates should be positioned upright and facing the center of the rack, and pots, pans and large dishes must be turned upside down.
- Load dinner plates, dishes, soup bowls, etc. between the tines.
- Load cookie sheets, cake pans and other large items at the sides or back of the rack. Loading these items in the front of the dishwasher can prevent the water spray from reaching the detergent dispenser.
- Make sure that pot handles and other large items do not stop the rotation of the spray arms.
- The lower rack should not be used for small items such as cups, wine glasses, or small plates. These items should be loaded in the upper rack.
- Make sure that large items do not interfere with the rotation of the spray arms, and do not prevent the detergent dispenser from opening.

Folding Down the Lower Tines

Fold tines down to fit larger dishes; pull tines back up to fit smaller dishes.

Case 1

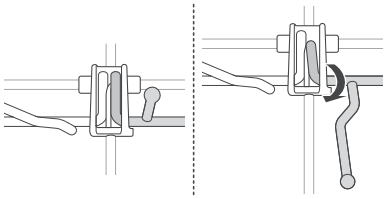

Case 2

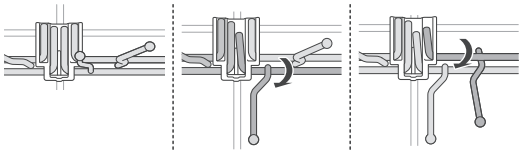

Loading Dishes & Pots

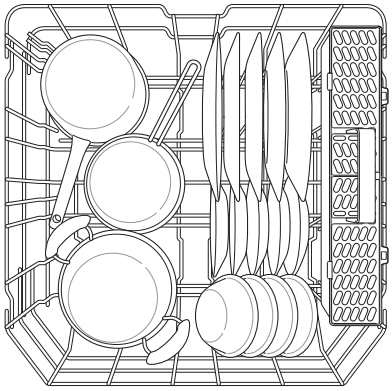

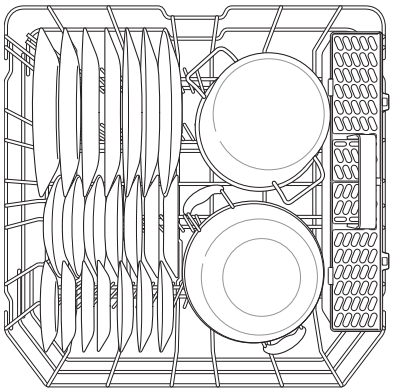

Loading Pots & Bowls

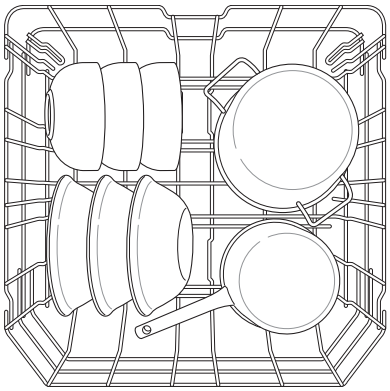

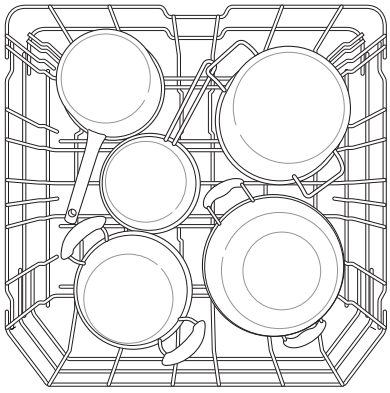

NOTE

- The silverware basket ships installed at the back of the bottom rack. For best performance, install it along the right side as shown.

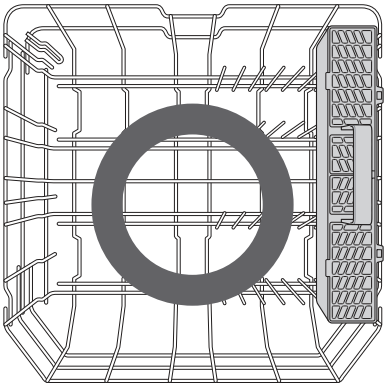

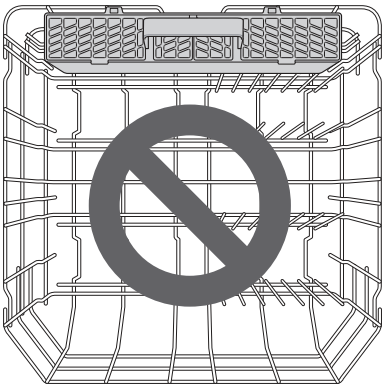

Loading the Upper Rack

Loading Dishes into the Upper Rack

Loading 10 Place Settings

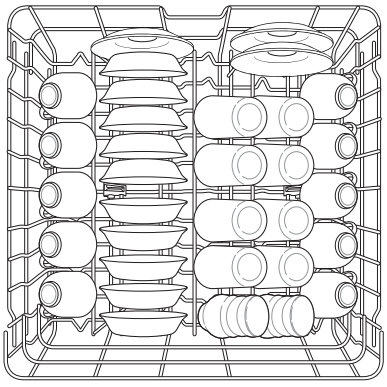

Loading 12 Place Settings

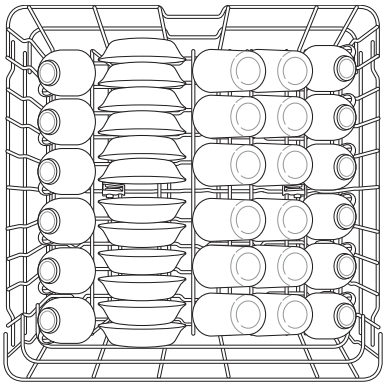

Loading Dishes & Pots

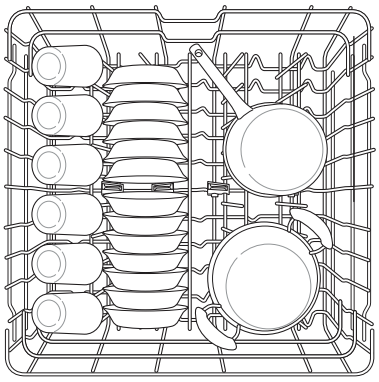

Upper Rack Loading Tips:

- Place cups and glasses in the rows between the rack tines. Placing them over the rack tines can lead to breakage and water spots.
- To avoid chipping, do not let stemware touch other items.
- Place items so that the open end faces down for cleaning and drying.
- Do not stack items on top of each other.
- Use the upper rack for small or delicate items such as small plates, cups, saucers, glasses, and dishwasher-safe plastic items.
- Cups, glasses, and bowls must be positioned upside down.
- Make sure items do not interfere with the rotation of the spray arms above and below the upper rack.
- When loading larger items in the upper rack, such as wine glasses or taller cups, it may be necessary to remove the cutlery rack if one is present.

Folding Down the Upper Tines

Fold tines down to fit larger dishes; pull tines back up to fit smaller dishes.

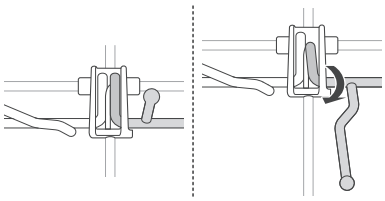

Height Adjustable Upper Rack

The upper rack adjusts up and down. Raise the upper rack to allow items up to 14" tall in the lower rack. Lower the upper rack to allow dishes up to 12" tall in the upper rack. The dishwasher ships with the upper rack raised.

There are two available positions for adjusting the height of the upper rack to create more space.

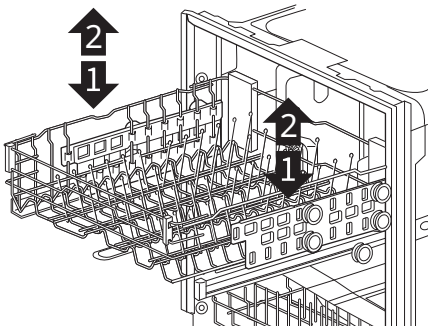

⚠ WARNING

- Before adjusting, ensure the rack is empty of all dishes. Otherwise dishes may get damaged or you may get injured.

NOTE

- Before pushing the upper rack into the dishwasher, ensure the rack height is the same on both sides. If the height is not the same on both sides, the dishwasher door will not shut and the upper spray arm will not connect to the water inlet.

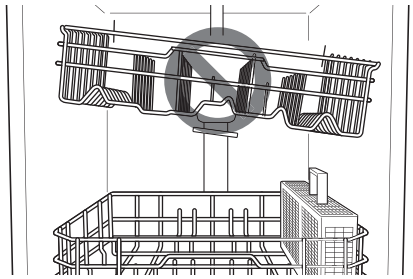

- There is a 2 5/8 inches (56 mm) gain in height when the upper rack is moved to the lower position.
- After adjusting the rack levels, check that the spray arms are free to rotate.
- When the upper rack is in the lower position, make sure the rack and the spray arm do not hit the items on the lower rack.
- When the upper rack is in the lower position, push in the upper rack first, and the lower rack later.
- Pull out the lower rack first, and the upper rack later.

Lowering or Raising the Rack

Pull the rack to the front and completely remove it from the rail, then reinsert it at the desired height.

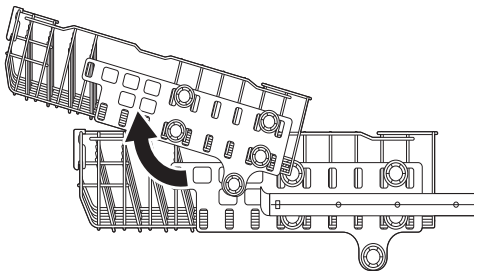

Possible plate size according to the upper rack position

Upper Rack Position	Plate Size in. (mm)	
	Upper Rack	Lower Rack
Upper	9 (230)	12 1/2 (320)
Lower	11 1/4 (286)	10 3/8 (264)

Adding Cleaning Products

Adding Detergent to the Dispenser

- Remove the label on the dispenser prior to running the dishwasher for the first time.
- The amount of detergent needed depends on the cycle, load size, and soil level of dishes.
- Put detergent into the detergent compartment before starting any cycle, except the **Rinse** cycle.

⚠ WARNING

- Dishwasher detergent and rinse aid contain chemical components, like all other household detergent. So, they must be kept out of the reach of children.

⚠ CAUTION

- Use only detergent intended for dishwashers. Incorrect detergent may cause the dishwasher to fill with suds during operation. Excess suds may reduce wash performance and may cause the dishwasher to leak.
- To avoid damaging the dispenser, do not pull up on the dispenser to close the dishwasher door.



NOTE

- After completion of the wash program, check whether the detergent was completely washed out.
- Some dishwasher detergent tablets may become stuck in the dispenser due to their excessive size. Tablets can be placed onto the base of the wash tub next to the filter before starting the cycle.
- Too much detergent can leave a film on dishes and in the dishwasher, resulting in poor wash performance.
- If dishwasher detergent tablets are used without liquid rinse aid, the dishes and dishwasher interior will have excessive moisture. Select the **Extra Dry** option for better drying performance.

- Using liquid rinse aid improves drying performance by allowing water to drain off of dishes after the final rinse.
- Do not use detergent tablets for shorter wash cycles. The tablet may not dissolve completely, causing detergent residue on dishes and inefficient cleaning.
- Using a wash booster helps remove spots, residue, and the white film caused by hard water. It does not help remove excess detergent residue.

1 Push the button on the dispenser lid to open the cover.

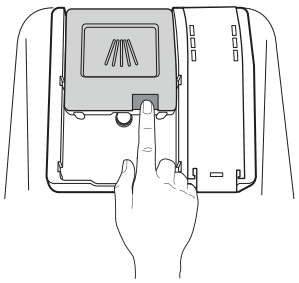

2 Add dishwashing detergent to the main wash compartment until the level is between the lines marked 15 and 25.

- Fill to over the 25 line for hard water or heavily soiled loads.
- Fill to the 15 line for soft water or lightly soiled loads.

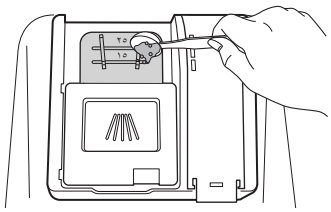

3 Slide the detergent lid closed until it clicks.

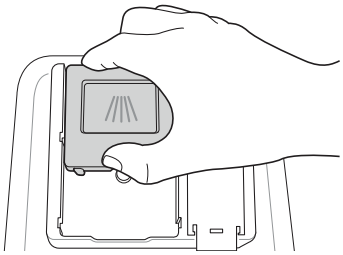

4 If a prewash is desired, fill the recessed prewash compartment area on the lid with detergent.

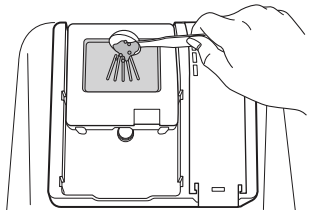

Adding Rinse Aid to the Dispenser

The **Rinse Aid** icon appears in the display when more rinse aid is needed.

The use of rinse aid is recommended to prevent water spots on dishes and to enhance drying performance.

NOTE

- Only use liquid rinse aid in the dishwasher.
- Do not overfill the rinse aid dispenser.
- Wipe off any spilled rinse aid around the dispenser.

1 Open the rinse aid lid by lifting up the flap.

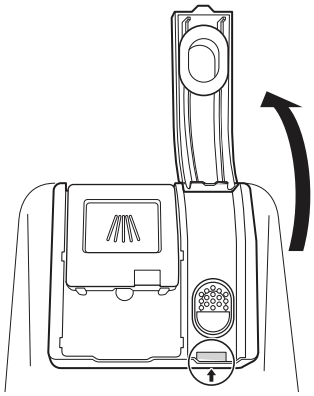

2 Add a liquid rinse aid to the maximum fill level. Allow the rinse aid to settle in the dispenser while filling, or air bubbles may result in poor drying performance. Avoid overfilling the dispenser.

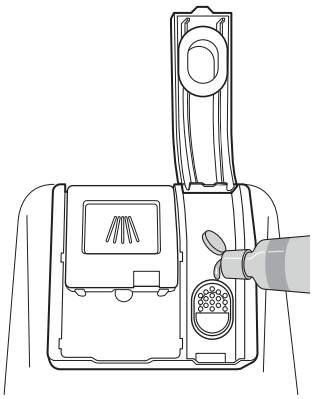

3 Close the lid to lock the dispenser. Rinse aid is dispensed automatically during the final rinse cycle.

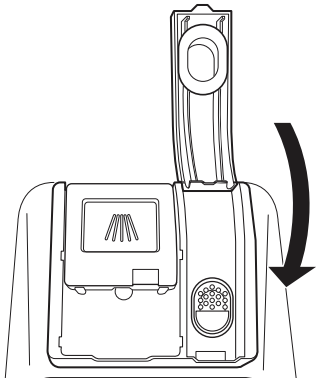

Rinse Aid Dispenser Adjustment

The dispenser has five adjustment levels. The dishwasher is programmed at the factory for a rinse aid dispenser level of 2. This can be checked and adjusted from the control panel.

NOTE

- Adjust the setting higher if you have hard water and notice calcium buildup on your dishes.
- Setting the rinse aid control too low will contribute to spotting and streaking on dishes and poor drying performance.
- Setting the control too high can cause foaming, which will cause poor wash performance.

1 Ensure the appliance is off.

2 Press **Power** and **Delay Start** simultaneously to check the current setting.

3 Press **Delay Start** to change the rinse aid dispenser setting. Each press of the button changes the setting one step from L0 to L4.

4 Once the desired rinse aid dispenser setting is selected, press **Start** to save.

Refilling the Rinse Aid

How often the dispenser needs to be refilled depends on how often dishes are washed and the rinse aid setting used.

- The **Rinse Aid** ✳ icon flashes when more rinse aid is needed, unless the rinse aid dispenser setting is set to L0.

SMART FUNCTIONS

LG ThinQ Application

The **LG ThinQ** application allows you to communicate with the appliance using a smartphone.

LG ThinQ Application Features

- **Smart Diagnosis**
  - This function provides useful information for diagnosing and solving issues with the appliance based on the pattern of use.

Installing the LG ThinQ Application

Search for the **LG ThinQ** application from the Google Play Store or Apple App Store on a smartphone. Follow instructions to download and install the application.

Smart Diagnosis™ Function

Use this feature to help you diagnose and solve problems with your appliance.

NOTE

- For reasons not attributable to LGE's negligence, the service may not operate due to external factors such as, but not limited to, Wi-Fi unavailability, Wi-Fi disconnection, local app store policy, or app unavailability.
- The feature may be subject to change without prior notice and may have a different form depending on where you are located.

Using Audible Diagnosis to Diagnose Issues

Follow the instructions below to use the audible diagnosis method.

- Launch the **LG ThinQ** application and select the **Smart Diagnosis** feature in the menu. Follow the instructions for audible diagnosis provided in the **LG ThinQ** application.

1 Press the **POWER** button to turn on the appliance.

- Do not press any other buttons.

2 Place the mouthpiece of your smartphone close to the logo.

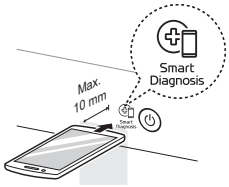

3 Press and hold the **Delay Start** button for 3 seconds or longer while holding the smartphone mouthpiece to the logo until the data transfer is complete.

- Keep the smartphone in place until the data transfer has finished. Time remaining for data transfer is displayed.

4 After the data transfer is complete, the diagnosis will be displayed in the application.

NOTE

- For best results, do not move the smartphone while the tones are being transmitted.

MAINTENANCE

To maintain performance and prevent trouble, it is important to check the outside and inside of the dishwasher, including filters and spray arms, at regular intervals.

⚠ WARNING

- When cleaning the outside and inside of the dishwasher, do not use benzene or thinner. Otherwise, it may cause fire or explosion.
- To prevent injury during care and maintenance or cleaning, wear gloves and/or protective clothing.

Cleaning and Care

Cleaning the Exterior

In most cases, the exterior of the dishwasher can be cleaned with a soft damp cloth or sponge, then dried with a soft cloth. If the dishwasher has a stainless steel exterior, use a stainless steel cleaner.

⚠ CAUTION

- If cooking oil is spilled on the exterior of the product, wipe it off immediately. Do not clean the exterior of the product with cleaners which contain alcohol, thinners, bleach, benzene, flammable liquids, or abrasives. These substances may discolor or damage the appliance.

Cleaning the Interior

- Clean the interior of the dishwasher periodically with a soft, damp cloth or sponge to remove food and dirt particles.
- To remove white spots and odor from inside the dishwasher, run an empty cycle, without detergent, with one cup of white vinegar in a dishwasher safe glass or bowl placed on the upper rack. (Vinegar is an acid and with constant use it could damage the appliance.)

NOTE

- Run the **Machine Clean** cycle once a month, or more often if needed, to remove detergent buildup and other residue.
- If you have not used the dishwasher for a long time, refresh the inside by running the **Machine Clean** cycle without detergent. When the cycle is finished, clean the inside and outside of the dishwasher according to the **MAINTENANCE** instructions.

Clogged Drain Air Gap or In-Sink Disposal

Check the drain air gap or in-sink disposal if the dishwasher is not draining well.

NOTE

- The drain air gap and disposal are external plumbing devices that are not part of the dishwasher.
- The warranty provided with the dishwasher does not cover service costs directly associated with the cleaning or repair of the external drain air gap and disposal.

Cleaning the Air Gap

1 Turn off the dishwasher.

2 Remove the air gap cover and the plastic cap underneath it.

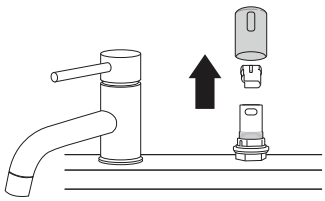

3 Clean out any debris with a toothpick or brush.

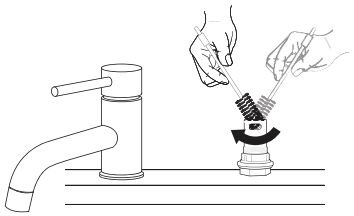

4 Replace the plastic cap and air gap cover.

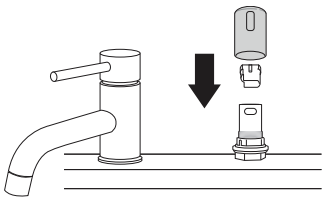

Cleaning the Filters

⚠ WARNING

- Be cautious of sharp edges when handling the stainless steel filter.

⚠ CAUTION

- Remove food residue caught in filters to prevent the buildup of odor-causing bacteria and possible drainage problems.

NOTE

- For best wash performance, clean the filter after each load. If food debris remains in the filter, it may cause an odor.
- In areas with hard water, clean the filter at least once a month with a soft brush.
- Clean the filters using non-abrasive materials and warm running water.

1 Remove the lower rack and position the bottom spray arm so a wider vee is open to the front.

2 Turn the inner filter counter-clockwise and take out the assembled inner filter and stainless steel filter.
With the filters removed, check the sump opening and remove any foreign materials, if needed.

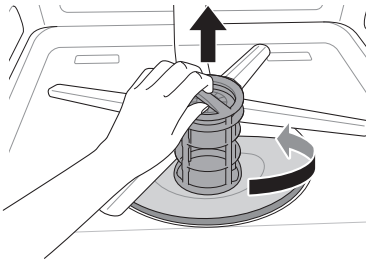

3 Clean the filters with a soft brush under running water. Reassemble the filters before reinstalling them.

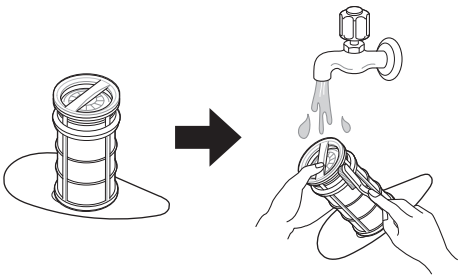

4 To replace the assembled filters, position the spray arm so the wider vee is toward the front. Fit the filters back into the filter holder and secure them by turning the inner filter clockwise until it clicks into place.

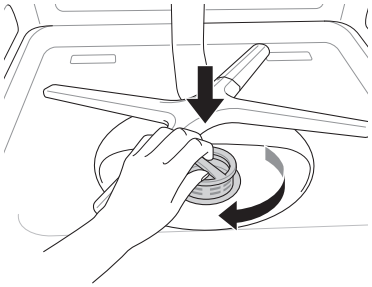

NOTE

- Make sure the filter is assembled correctly before starting a cycle. When assembling, rotate the filter firmly until it clicks.

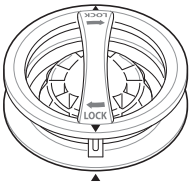

Cleaning the Spray Arm

If the spray arm holes are blocked by any food residue, dishes may not be cleaned well due to improper water spray.

It is recommended that the spray arms be cleaned once every two weeks.

Cleaning the Lower Spray Arm

1 Make sure that the water jet holes are not blocked by food particles.

2 If any food residue blocks the spray arm holes, remove it with a pin or any sharp tool.

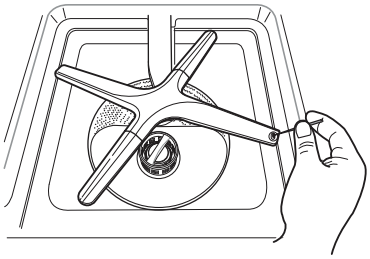

⚠ CAUTION

- To avoid breaking the rolling spray arm sections, do not pull or manually rotate them.

Cleaning the Upper Spray Arm

1 Pull the upper rack forward. Make sure that the water jet holes are not blocked by food particles.

2 When cleaning is necessary, remove the upper spray arm by turning the nut on the bottom of the spray arm 1/8 turn counter-clockwise and pulling down.

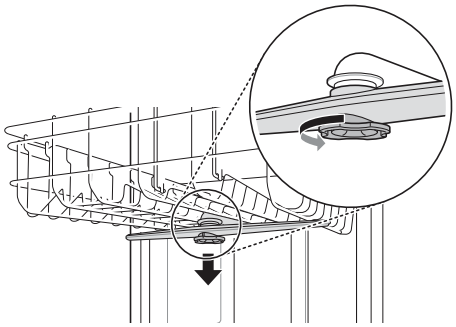

3 Remove food particles by rinsing or shaking the spray arm.

4 If any food residue blocks the spray arm holes, remove it with a pin or any sharp tool.

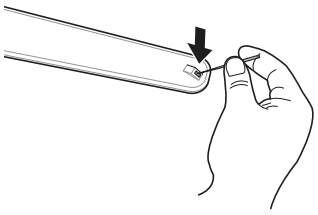

5 After removing the food residue, clean the spray arms under running water.

6 After cleaning the upper spray arm, press it up into place. Turn the nut 1/8 turn clockwise to make sure that the nut locks back into place.

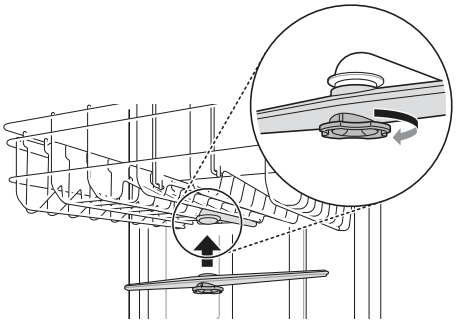

7 After assembly, make sure that the spray arms rotate freely.

Seasonal Maintenance and Storage

- If you will be absent for an extended period of time during warmer months, close the water valve and disconnect the power supply line, or turn off the circuit breaker. Clean the filter, tub and dispenser to prevent odor.
- If you will be absent for an extended period of time during colder months and there is a possibility of freezing temperatures, winterize the water supply lines and the dishwasher itself. Winterization must be performed by qualified service personnel.

TROUBLESHOOTING

The washer is equipped with an automatic error-monitoring system to detect and diagnose problems at an early stage. If the washer does not function properly or does not function at all, check the following before you call for service.

Before Calling for Service

FAQs

Q: Does this dishwasher require a rinse aid to be used?

A: Rinse aid is strongly recommended to enhance the drying performance of the dishwasher. In order to be more energy efficient, the hybrid drying system does not use a heating element to assist in drying, so a rinse aid plays an integral role in the drying process. If a rinse aid is not used, water may remain on the dishes and the tub. Rinse aid helps to ensure that the majority of the water has been sheeted off of the dishes at the end of the rinse and that the load is ready for the dry cycle.

Q: What can be done if my dishes have a cloudy, white film on them after a wash?

A: The cloudy film is usually caused by minerals in the water reacting with the dishwasher detergent. First, be certain not to use too much detergent. Refer to **Adding Detergent to the Dispenser** section for recommended detergent amounts. Add an extra rinse to the cycle. LG Dishwashers use less water than traditional dishwashers, so adding an extra rinse aids in rinsing the film away. If the water supply is hard, it may be necessary to add a performance booster that addresses the hard water condition.

Q: How do I remove white film on the tub?

A: Measure 3 tbsp. (40 g) of citric acid powder and use it to fill the main detergent compartment. Run a **Machine Clean** cycle. Do not use detergent.

Q: What steps can I take to improve drying results?

A: Drying performance is directly affected by the amount of heat that remains in the tub after the heated rinse is performed. If your dishwasher is far away from your home's hot water heater, it may be necessary to run the hot water tap in the sink before starting a wash cycle, to ensure that cool water is purged from the hot water lines. This will ensure your dishwasher has a consistent supply of hot water from start to finish. Using the **High Temp.** setting also aids in keeping the inner drum temperature and dishes hotter before drying begins.
LG dishwashers are designed to be used in conjunction with a rinse aid. Using a rinse aid will maximize the amount of water that has already been sheeted away from the dishes before the dry cycle begins. If a rinse aid is used and the performance still needs a boost, adjust the amount of rinse aid used. 2 is the default setting, but if necessary set the level to 3 so more rinse aid is used.
Water tends to bead rather than sheet off plastic and nonstick surfaces, making them more difficult to dry. If washing plastic items in a Normal cycle, select the **Extra Dry** or **Night Dry** option or both for better drying results. When the rinse aid is empty, the **Extra Dry** option is selected automatically.
Allow the dishwasher to completely finish the dry cycle before opening the door. If the door is opened in the middle of the dry cycle, the heat that is necessary for the hybrid dry system to work will escape. This will cause all of the dishes inside to remain wet once the cycle finishes.

Q: What is the hybrid drying system?

A: The dishwasher does not rely on a heating element for the drying process; instead, it relies on the heat that is retained by the dishes and the tub during the wash and rinse cycles to turn the moisture in the tub into humidity.
Warm, moist air in the dishwasher is then pulled into a condensing duct in the door by a fan. The air then cools, which causes the humidity to condense. Room temperature air is also drawn into the duct to help the air cool down faster. When this moisture condenses into a liquid, it is drained out.

NOTE

- Rinse aid is required to enhance the drying performance. If no rinse aid is used, water may remain on the dishes and the tub.

Q: Why am I hearing a whistling sound from the dishwasher?

A: It is important to determine the duration of the noise and when it happens (what part of the cycle). When water is drawn into the dishwasher, a whistling noise can be heard. This is normal. If the water pressure is too high, it will be louder, so it may be necessary to adjust the water valve to lower the pressure if the noise is too loud.

Q: What kinds of dishes can be placed in the dishwasher?

A: Ensure that the dishes you place in the dishwasher are dishwasher safe. Plastic dishware will not dry as effectively as glass and metal dishware. Plastic items do not retain heat as well as glass and metal dishware. Plastic cups and dishes may require some hand drying before being put away at the end of the cycle.

Q: Can I run a drain only cycle?

A: To drain standing water, press and hold **Start** for three seconds until the cycle stops. Once the dishwasher finishes draining, the power turns off.

Q: Why does my dishwasher continuously chime if I open the door during a cycle or right after the cycle has finished?

A: This is normal. The dishwasher is letting you know that the interior temperatures of the unit are hot and to use caution when reaching inside. Once the unit has cooled down, the chiming will stop.

Q: What is Control Lock and how is it activated?

A: **Control Lock** is a feature that prevents the controls from being changed during the cycle. It does not prevent the door from being opened or the unit from being powered off. To activate or deactivate, press and hold **Flex Zone** and **High Temp.** simultaneously for three seconds.

Q: Can I add an extension to the drain hose?

A: If a drain hose extension is required, use a 5/8" or 7/8" inside diameter, 2 ft ~ 3 ft. length hose and a coupler to connect the two hose ends.

Q: An LED is blinking, the machine is chiming, and the dishwasher won't start. What is wrong with the dishwasher?

A: This is a safety feature. The door must be closed within four seconds of pressing the **Start** button. If the door is not closed within four seconds, an LED flashes, an audible alert sounds, and the dishwasher does not operate. To start the dishwasher, open the door and either close the door and press **Start** (front controls).

Q: Should I pre-rinse dishes before loading them?

A: No, you don't need to pre-rinse the dishes before loading especially if using the **Normal** and **Auto** cycles. The dishwasher washes dishes clean without pre-rinsing.

User Support Videos

For further assistance, there are videos and tutorials available through the LG.com website.

1 On the **www.lg.com** home page, click on the **Support** menu tab to bring up the menu selections. Select **Video Tutorials**.

2 Select a product category and then pick a topic or search a keyword.

NOTE

- Scan this QR code to quickly access the video search page on the LG website.

Error Messages

Problem	Possible Cause & Solution
IE	**Water inlet problem.** • Check for a clogged, kinked or frozen water inlet hose. • Check water supply.
OE	**Drainage Problem.** • Check for a clogged, kinked or frozen water drain hose.
	Air gap or disposal is clogged. • Clean air gap or disposal.
	Filters are clogged. • Clean filters.
bE	**Oversudsing caused by improper detergent, such as liquid dish soap.** • Do not use hand dishwashing liquids. Only use detergents which are designed for use in automatic dishwashers. • To remove detergent residue in the tub, pour approximately 4 oz ~ 8 oz (100 ml ~ 200 ml) of milk into a shallow bowl, place it in the upper rack and then run the appliance on the **Auto** cycle.
	Failure to level dishwasher. • Make sure that the appliance is properly leveled.
AE	**Water leakage** • Turn off the water supply to the dishwasher and call an LG Electronics Customer Information Center at 1-800-243-0000 (U.S.A.) or 1-888-542-2623 (Canada). • The dishwasher makes an alert sound for 10 seconds, and runs the drain pump intermittently. If power is turned off to the machine, the machine powers back on automatically until the AE error is resolved.
FE	**Excessive Water supplied.** • Please call an LG Electronics Customer Information Center at 1-800-243-0000 (U.S.A.) 1-888-542-2623 (Canada).
HE	**Heater circuit failure.** • Please call an LG Electronics Customer Information Center at 1-800-243-0000 (U.S.A.) 1-888-542-2623 (Canada).

Problem	Possible Cause & Solution
tE	**Thermistor failure.** • Please call an LG Electronics Customer Information Center at 1-800-243-0000 (U.S.A.) 1-888-542-2623 (Canada).
LE	**Motor trouble** • Please call an LG Electronics Customer Information Center at 1-800-243-0000 (U.S.A.) 1-888-542-2623 (Canada).
nE	**Vario motor trouble** • Please call an LG Electronics Customer Information Center at 1-800-243-0000 (U.S.A.) 1-888-542-2623 (Canada).
n:#, U:#, d:#, t# **(# is a number.)**	**Test mode is selected.** • This is not an error code. This code is used when testing the dishwasher. Power the unit off and on and the code will disappear.
L0, L 1, L2, L3, L4	**Rinse aid level setting mode is selected.** • This is not an error code. This code indicates the current rinse aid level. For more information, refer to the **Adding Cleaning Agents** section.
CL	**Control Lock is activated.** • This is not an error code. This code indicates that the control lock is activated. Press and hold **Flex Zone** and **High Temp.** buttons simultaneously for three seconds.

Operation

Problem	Possible Cause & Solution
Dishwasher will not operate.	**Start button is not pressed.** • Press the **Start** button.
	Door is not completely closed. • Make sure that the door is completely closed and latched.
	Power supply or power supply line is not connected. • Connect the power supply or power supply line properly.
	Fuse is blown or circuit breaker tripped. • Replace the fuse or reset the circuit breaker.
	Control Lock is activated. • Deactivate **Control Lock**.
Dishwasher operates too long.	**Dishwasher is connected to cold water.** • Check the water supply connection or water heater setting. (Heating cold water takes longer.)
Water remains in tub after completion of cycle.	**Drain hose is kinked or clogged.** • Adjust hose or clear blockage.
Noise	**Some level of noise is normal during operation.** • Detergent cover opening. • Drain pump at the beginning of drain cycle.
	The dishwasher is not level. • Adjust leveling feet.
	Nozzle arm knocking against dishes. • Reposition the dishes.

Problem	Possible Cause & Solution
Lights do not illuminate.	**Power is not connected.** • Connect power supply.
Spray arms do not rotate smoothly.	**Holes of spray arms are blocked by food particles.** • Clean the holes of spray arms.
Upper rack is crooked.	**Rack is poorly adjusted.** • See the **Height Adjustable Upper Rack** section.
Dishwasher continuously chimes when the door is opened, during or right after a cycle has completed.	**This is a safety measure. Contact with escaping steam or the hot contents of the dishwasher could result in injury.** • Close the door until the dishwasher and dishes have cooled down. The chiming will stop if the door is closed or the interior temperature has cooled.
Door does not close completely.	**Cutlery rack is not properly loaded.** • Push the door handle to close the door properly until it clicks.
Dishwasher chimes if panel is touched during operation.	**Bumping into or touching the control panel during operation may result in a disabled button sound. Only the Power, Start, and Control Lock buttons are enabled during operation to prevent cycle settings from being changed inadvertently.** • Button sounds can be turned off by pressing and holding **Cycles** and **Machine Clean** buttons for three seconds. • The end of cycle chime and safety alert sounds will still sound.
Dishwasher did not finish cycle.	**Door was opened during cycle.** • If the door is opened during a cycle, the Start key must be pressed within 4 minutes or the machine turns off and all settings are lost.
Leaking in front of appliance	**Dishwasher not leveled properly.** • Verify the appliance is level from side to side and from front to back. See leveling instructions in the Installation section.
	Wrong detergent used. • If excessive sudsing is causing the leak, allow the foam to subside for 24 hours then clean the inside of the tub with milk.

Performance

Problem	Possible Cause & Solution
Odor	**The previous cycle was stopped before completion and residual water remains in the dishwasher.** • Turn on the power, run the **Cancel** cycle option to remove the residual water, then run the **Turbo** cycle using detergent but with the dishwasher empty.
	There is food in the bottom of the appliance or in the filter. • Clean the filter and the interior according to the **Maintenance** section of the owner's manual.
	Unwashed dishes are left in the appliance for a long time. • Run a cycle with one cup of white vinegar in a dishwasher safe glass or bowl placed on the upper rack. (Vinegar is an acid, and with constant use it could damage your appliance.)
	After cleaning, the appliance smells like detergent. • This is normal.

Problem	Possible Cause & Solution
Food soil remains on dishes.	**Improper cycle selection.** • Select correct cycle based on soil level and type of dishware being washed.
	Water temperature is too low. • Check water supply connection or water heater setting.
	Dishwashing detergent was not used. • Use recommended detergent.
	Low inlet water pressure. • Water pressure should be between 20 and 80 psi.
	Water jet holes on spray arms blocked. • Clean the spray arms.
	Improper loading of dishes. • Make sure dishes do not block spray arm rotation or interfere with detergent dispenser.
	Filters are clogged. • Clean filters.
Cloudiness on glassware.	**Combination of excessive detergent and hard water.** • Use less detergent and use a rinse aid to minimize the problem.
Black or gray marks on dishes.	**Aluminum items rubbing dishes during cycle.** • Reposition the dishes.
Yellow or brown film on inside surfaces of dishwasher.	**Coffee or tea stains.** • Eliminate the stain by using a stain removal product.
Spots and filming on dishes.	**Low water temperature.** • Water supply should be at least 120 °F for best wash performance.
	Overloading. • Do not overload the dishwasher.
	Improper loading. • See the **Operation** section.
	Insufficient water pressure. • Water pressure should be between 20 and 80 psi.
	Insufficient detergent. • Add the recommended amount of detergent. See the Operation section.
	Rinse aid dispenser is empty. • Refill rinse aid dispenser.
	Hard water buildup in the tub. • Remove all dishes, silverware and silverware holder from dishwasher. Only racks should remain in tub. For best results, use citric acid powder (can be found in canning sections of most grocery stores or online). Measure 3 tablespoons (40 g) of citric acid powder. Fill main wash compartment with measured powder. If you cannot find citric acid powder, pour approximately one cup (200 ml - 300 ml) of white vinegar into shallow bowl and place in upper rack. Run **Machine Clean** cycle. Do not use detergent. • Adjust the water hardness level setting to match the water supply conditions in your area.In areas with hard water, remember to refill the softener with dishwasher salt.
Dishes don’t dry.	**Rinse aid dispenser empty.** • Check and refill the rinse aid dispenser if empty.

LIMITED WARRANTY

USA

TERMS AND CONDITIONS

ARBITRATION NOTICE: THIS LIMITED WARRANTY CONTAINS AN ARBITRATION PROVISION THAT REQUIRES YOU AND LG TO RESOLVE DISPUTES BY BINDING ARBITRATION INSTEAD OF IN COURT, UNLESS YOU CHOOSE TO OPT OUT. IN ARBITRATION, CLASS ACTIONS AND JURY TRIALS ARE NOT PERMITTED. PLEASE SEE THE SECTION TITLED “PROCEDURE FOR RESOLVING DISPUTES” BELOW.

Should your LG Dishwasher fail due to a defect in materials or workmanship under normal home use, during the warranty period set forth below, LG will at its option repair or replace the product. This limited warranty is valid only to the original retail purchaser of the product and applies only when purchased and used within the United States, including U.S. Territories. Proof of original retail purchase is required to obtain warranty service under this limited warranty.

Warranty Period	Scope of Warranty	HOW SERVICE IS HANDLED
One (1) year from date of original retail purchase	Labor / Parts	LG will also provide, free of charge, all labor and on-site service to replace the defective part.
Five (5) years from date of original retail purchase	Main control board† / Racks	Main control board and dishwasher racks. Customer will be responsible for any labor or in-home service to replace defective parts.
Ten (10) years from date of original retail purchase	Direct Drive Motor	Direct Drive motor. Customer will be responsible for any labor or in-home service to replace defective parts.
Limited Lifetime	Tub	Stainless steel door liner and tub. Customer will be responsible for any labor or in-home service to replace defective parts.

† Main control board is located on the bottom right of the dishwasher when viewed from the front.

- Replacement products and parts are warranted for the remaining portion of the original warranty period or ninety (90) days, whichever is greater.
- Replacement products and parts may be new or remanufactured.

THIS WARRANTY IS IN LIEU OF ANY OTHER WARRANTY, EXPRESS OR IMPLIED, INCLUDING WITHOUT LIMITATION, ANY WARRANTY OF MERCHANTABILITY OR FITNESS FOR A PARTICULAR PURPOSE. TO THE EXTENT ANY IMPLIED WARRANTY IS REQUIRED BY LAW, IT IS LIMITED IN DURATION TO THE EXPRESS WARRANTY PERIOD ABOVE. NEITHER THE MANUFACTURER NOR ITS U.S. DISTRIBUTOR SHALL BE LIABLE FOR ANY INCIDENTAL, CONSEQUENTIAL, INDIRECT, SPECIAL, OR PUNITIVE DAMAGES OF ANY NATURE, INCLUDING WITHOUT LIMITATION, LOST REVENUES OR PROFITS, OR ANY OTHER DAMAGE WHETHER BASED IN CONTRACT, TORT, OR OTHERWISE.

Some states do not allow the exclusion or limitation of incidental or consequential damages or limitations on how long an implied warranty lasts, so the above exclusion or limitation may not apply to you. This warranty gives you specific legal rights and you may also have other rights that vary from state to state.

THIS LIMITED WARRANTY DOES NOT COVER:

- Service trips to deliver, pick up, or install or repair the product; instruction to the customer on operation of the product; repair or replacement of fuses or correction of wiring or plumbing, or correction of unauthorized repairs/installation.

- Failure of the product to perform during power failures and interrupted or inadequate electrical service.
- Damage caused by leaky or broken water pipes, frozen water pipes, restricted drain lines, inadequate or interrupted water supply or inadequate supply of air.
- Damage resulting from operating the product in a corrosive atmosphere or contrary to the instructions outlined in the product's owner's manual.
- Damage to the product caused by accidents, pests and vermin, lightning, wind, fire, floods, or acts of God.
- Damage or failure caused by unauthorized modification or alteration, or if it is used for other than the intended purpose, or any water leakage where the unit was not properly installed.
- Damage or failure caused by incorrect electrical current, voltage, or plumbing codes, commercial or industrial use, or use of accessories, components, or consumable cleaning products that are not approved by LG.
- Damage caused by transportation and handling, including scratches, dents, chips, and/or other damage to the finish of your product, unless such damage results from defects in materials or workmanship and is reported within one (1) week of delivery.
- Damage or missing items to any display, open box, discounted, or refurbished product.
- Products with original serial numbers that have been removed, altered, or cannot be readily determined. Model and serial numbers, along with original retail sales receipts, are required for warranty validation.
- Increases in utility costs and additional utility expenses.
- Repairs when your product is used for other than normal and usual household use (e.g. commercial use, in offices and recreational facilities) or contrary to the instructions outlined in the product's owner's manual.
- Costs associated with removal of your product from your home for repairs.

The cost of repair or replacement under these excluded circumstances shall be borne by the consumer.

TO OBTAIN WARRANTY SERVICE AND ADDITIONAL INFORMATION

For additional product information, visit the LG website at http://www.lg.com

For assistance using this product or to schedule service, contact LG Electronics at 1-800-243-0000.

For further assistance, write: LG Electronics, 201 James Record Road, Huntsville, Alabama 35813

PROCEDURE FOR RESOLVING DISPUTES:

ALL DISPUTES BETWEEN YOU AND LG ARISING OUT OF OR RELATING IN ANY WAY TO THIS LIMITED WARRANTY OR THE PRODUCT SHALL BE RESOLVED EXCLUSIVELY THROUGH BINDING ARBITRATION, AND NOT IN A COURT OF GENERAL JURISDICTION. BINDING ARBITRATION MEANS THAT YOU AND LG ARE EACH WAIVING THE RIGHT TO A JURY TRIAL AND TO BRING OR PARTICIPATE IN A CLASS ACTION.

Definitions. For the purposes of this section, references to "LG" mean LG Electronics U.S.A., Inc., its parents, subsidiaries and affiliates, and each of their officers, directors, employees, agents, beneficiaries, predecessors in interest, successors, assigns and suppliers; references to "dispute" or "claim" shall include any dispute, claim or controversy of any kind whatsoever (whether based in contract, tort, statute, regulation, ordinance, fraud, misrepresentation or any other legal or equitable theory) arising out of or relating in any way to the sale, condition or performance of the product or this Limited Warranty.

Notice of Dispute. In the event you intend to commence an arbitration proceeding, you must first notify LG in writing at least 30 days in advance of initiating the arbitration by sending a letter to LG at LG Electronics, USA, Inc. Attn: Legal Department- Arbitration 111 Sylvan Avenue, Englewood Cliffs, NJ 07632. You and LG agree to engage in good faith discussions in an attempt to amicably resolve your claim. The notice must provide your name, address, and telephone number; identify the product that is the subject of the claim; and describe the nature of the claim and the relief being sought. If you and LG are unable to resolve the dispute within 30 days, either party may proceed to file a claim for arbitration.

Agreement to Binding Arbitration and Class Action Waiver. Upon failure to resolve the dispute during the 30 day period after sending written notice to LG, you and LG agree to resolve any claims between us only by binding arbitration on an individual basis, unless you opt out as provided below. Any dispute between you and LG shall not be combined or consolidated with a dispute involving any other person's or entity's product or claim. More specifically, without limitation of the foregoing, any dispute between you and LG shall not under any circumstances proceed as part of a class or representative action. Instead of arbitration, either party may bring an individual action in small claims court, but that small claims court action may not be brought on a class or representative basis.

Arbitration Rules and Procedures. To begin arbitration of a claim, either you or LG must make a written demand for arbitration. The arbitration will be administered by the American Arbitration Association ("AAA") and will be conducted before a single arbitrator under the AAA's Consumer Arbitration Rules that are in effect at the time the arbitration is initiated (referred to as the "AAA Rules") and under the procedures set forth in this section. The AAA Rules are available online at www.adr.org/consumer. Send a copy of your written demand for arbitration, as well as a copy of this provision, to the AAA in the manner described in the AAA Rules. You must also send a copy of your written demand to LG at LG Electronics, USA, Inc. Attn: Legal Department- Arbitration 111 Sylvan Avenue, Englewood Cliffs, NJ 07632. If there is a conflict between the AAA Rules and the rules set forth in this section, the rules set forth in this section will govern. This arbitration provision is governed by the Federal Arbitration Act. Judgment may be entered on the arbitrator's award in any court of competent jurisdiction. All issues are for the arbitrator to decide, except that issues relating to the scope and enforceability of the arbitration provision and to the arbitrability of the dispute are for the court to decide. The arbitrator is bound by the terms of this provision.

Governing Law. The law of the state of your residence shall govern this Limited Warranty and any disputes between us except to the extent that such law is preempted by or inconsistent with applicable federal law.

Fees/Costs. You do not need to pay any fee to begin an arbitration. Upon receipt of your written demand for arbitration, LG will promptly pay all arbitration filing fees to the AAA unless you seek more than $25,000 in damages, in which case the payment of these fees will be governed by the AAA Rules. Except as otherwise provided for herein, LG will pay all AAA filing, administration and arbitrator fees for any arbitration initiated in accordance with the AAA Rules and this arbitration provision. If you prevail in the arbitration, LG will pay your attorneys' fees and expenses as long as they are reasonable, by considering factors including, but not limited to, the purchase amount and claim amount. Notwithstanding the foregoing, if applicable law allows for an award of reasonable attorneys' fees and expenses, an arbitrator can award them to the same extent that a court would. If the arbitrator finds either the substance of your claim or the relief sought in the demand is frivolous or brought for an improper purpose (as measured by the standards set forth in Federal Rule of Civil Procedure 11(b)), then the payment of all arbitration fees will be governed by the AAA Rules. In such a situation, you agree to reimburse LG for all monies previously disbursed by it that are otherwise your obligation to pay under the AAA Rules. Except as otherwise

provided for, LG waives any rights it may have to seek attorneys' fees and expenses from you if LG prevails in the arbitration.

Hearings and Location. If your claim is for $25,000 or less, you may choose to have the arbitration conducted solely on the basis of (1) documents submitted to the arbitrator, (2) through a telephonic hearing, or (3) by an in-person hearing as established by the AAA Rules. If your claim exceeds $25,000, the right to a hearing will be determined by the AAA Rules. Any in-person arbitration hearings will be held at a location within the federal judicial district in which you reside unless we both agree to another location or we agree to a telephonic arbitration.

Opt Out. You may opt out of this dispute resolution procedure. If you opt out, neither you nor LG can require the other to participate in an arbitration proceeding. To opt out, you must send notice to LG no later than 30 calendar days from the date of the first consumer purchaser's purchase of the product by either: (i) sending an e-mail to optout@lge.com, with the subject line: "Arbitration Opt Out" or (ii) calling 1-800-980-2973. You must include in the opt out e-mail or provide by telephone: (a) your name and address; (b) the date on which the product was purchased; (c) the product model name or model number; and (d) the serial number (the serial number can be found (i) on the product; or (ii) online by accessing https://www.lg.com/us/support/repair-service/schedule-repair-continued and clicking on "Find My Model & Serial Number").

You may only opt out of the dispute resolution procedure in the manner described above (that is, by e-mail or telephone); no other form of notice will be effective to opt out of this dispute resolution procedure. Opting out of this dispute resolution procedure will not affect the coverage of the Limited Warranty in any way, and you will continue to enjoy the full benefits of the Limited Warranty. If you keep this product and do not opt out, then you accept all terms and conditions of the arbitration provision described above.



LG Customer Information Center

For inquiries or comments,
visit **www.lg.com** or call:

1-800-243-0000 U.S.A.

1-888-542-2623 CANADA

Register your product Online!

www.lg.com