FISHER & PAYKEL

DATA SHEET
30" Professional Double Wall Oven

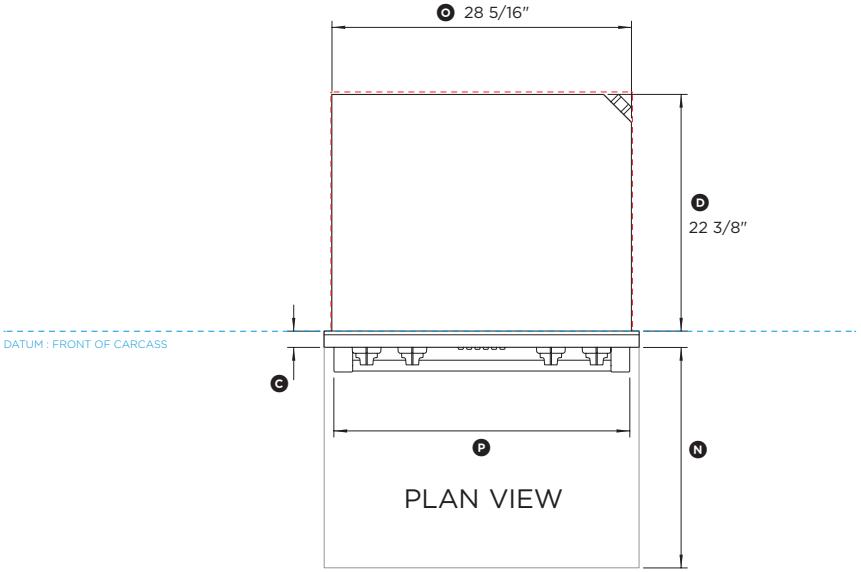

PLAN VIEW

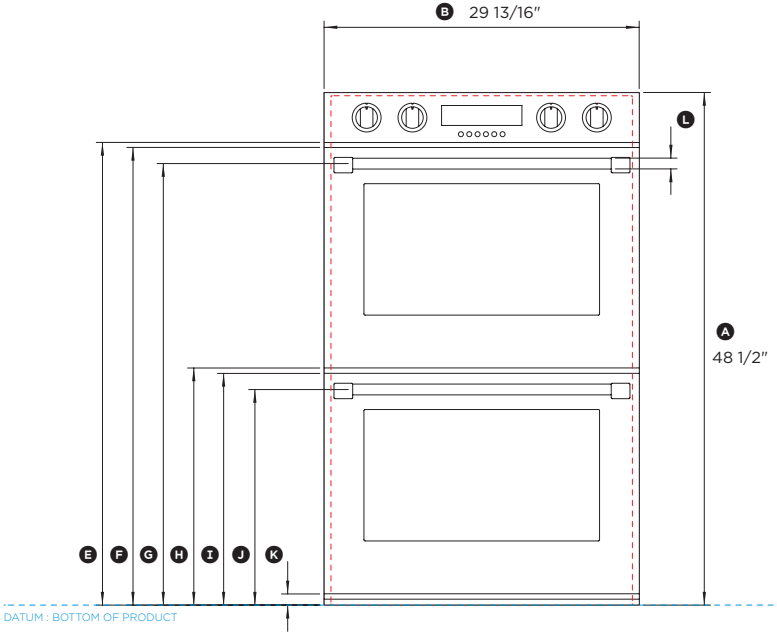

FRONT VIEW

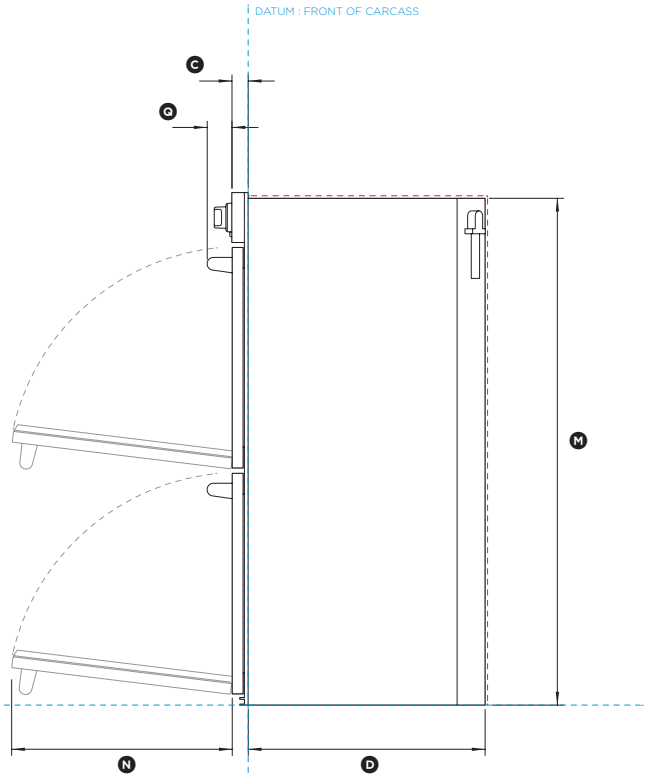

PROFILE VIEW

0 5 10 20 inches

Model no:
WODV2-30
(refer page 2 for metric measurements)

Product Dimensions	**in**
(A) Overall height of oven	48 1/2"
(B) Overall width of oven	29 13/16"
(C) Depth of oven front and control panel (excludes handle and dials)	1 9/16"
(D) Depth of oven chassis (does not include oven front)	22 3/8"
(E) Height from bottom datum to bottom of control panel	43 3/4"
(F) Height from bottom datum to top of top door	43 5/16"
(G) Height from bottom datum to centre of top handle	41 3/4"
(H) Height from bottom datum to bottom of top door	22 7/16"
(I) Height from bottom datum to top of bottom door	21 15/16"
(J) Height from bottom datum to centre of bottom handle	20 3/8"
(K) Height from bottom datum to top of vent	1 1/16"
(L) Thickness of handles	1"
(M) Height of chassis	47 15/16"
(N) Depth of door (open) (measured from front of door)	20 7/8"
(O) Overall width of chassis	28 5/16"
(P) Width of handle	28"
(Q) Depth of handle (measured from front of door)	2 3/8"

Minimum Clearances	**in**
Minimum inside height of cavity from bottom datum	48 3/16"
Minimum inside width of cavity	28 1/2"
Minimum inside depth of cavity from front datum	22 5/8"

INDICATES PRODUCT DATUM ----------
INDICATES CLEARANCES ----------

DATE: **24.04.2018**

IMPORTANT: Throughout this guide, dimensions may vary by ±2mm (1/16"). Read the installation guide for detailed information on installing the product. For full installation instructions and specifications visit fisherpaykel.com

FISHER & PAYKEL

DATA SHEET
30" Professional Double Wall Oven

Model no:
WODV2-30
(refer page 1 for imperial measurements)

Product Dimensions	**mm**
Ⓐ Overall height of oven	1232
Ⓑ Overall width of oven	757
Ⓒ Depth of oven front and control panel (excludes handle and dials)	39
Ⓓ Depth of oven chassis (does not include oven front)	569
Ⓔ Height from bottom datum to bottom of control panel	1112
Ⓕ Height from bottom datum to top of top door	1100
Ⓖ Height from bottom datum to centre of top handle	1061
Ⓗ Height from bottom datum to bottom of top door	570
Ⓘ Height from bottom datum to top of bottom door	557
Ⓙ Height from bottom datum to centre of bottom handle	518
Ⓚ Height from bottom datum to top of vent	27
Ⓛ Thickness of handles	26
Ⓜ Height of chassis	1218
Ⓝ Depth of door (open) (measured from front of door)	530
Ⓞ Overall width of chassis	720
Ⓟ Width of handle	711
Ⓠ Depth of handle (measured from front of door)	60

Minimum Clearances	**mm**
Minimum inside height of cavity from bottom datum	1224
Minimum inside width of cavity	724
Minimum inside depth of cavity from front datum	575

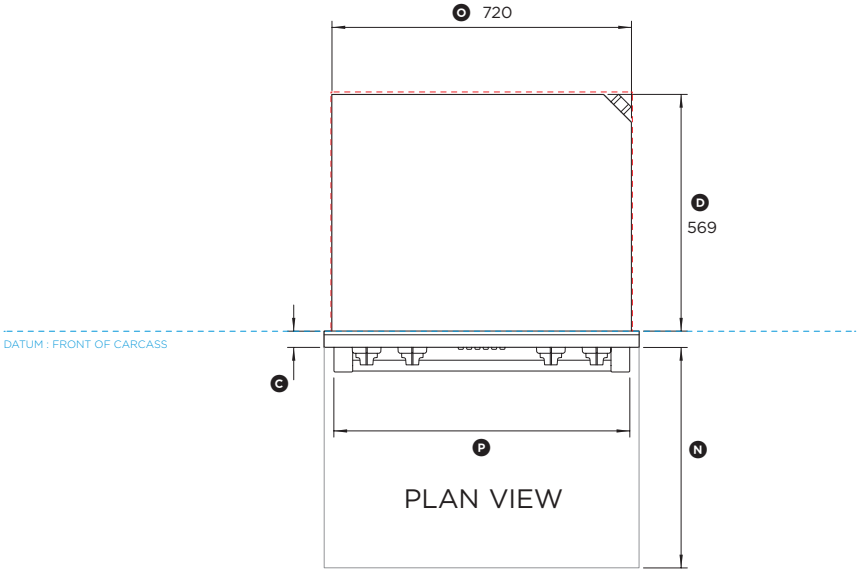

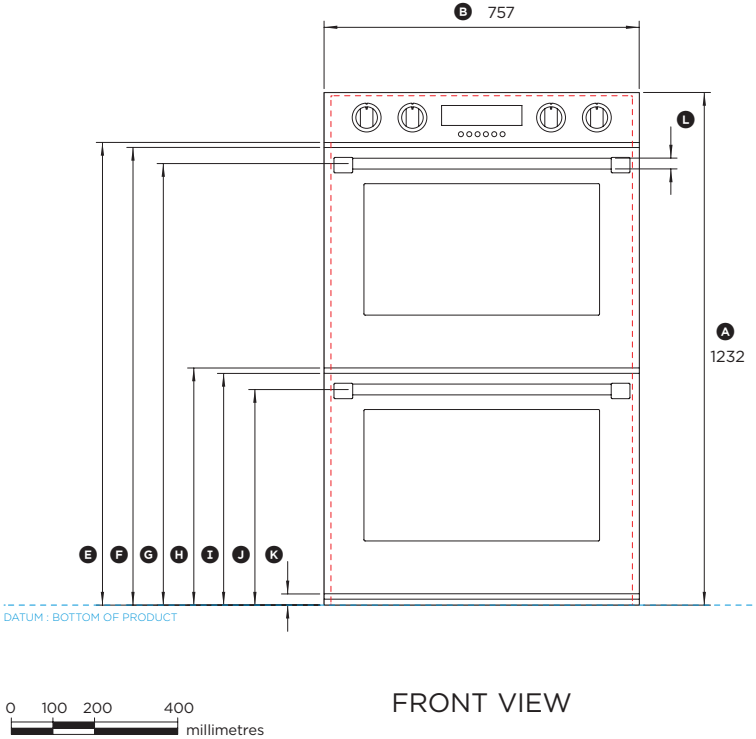

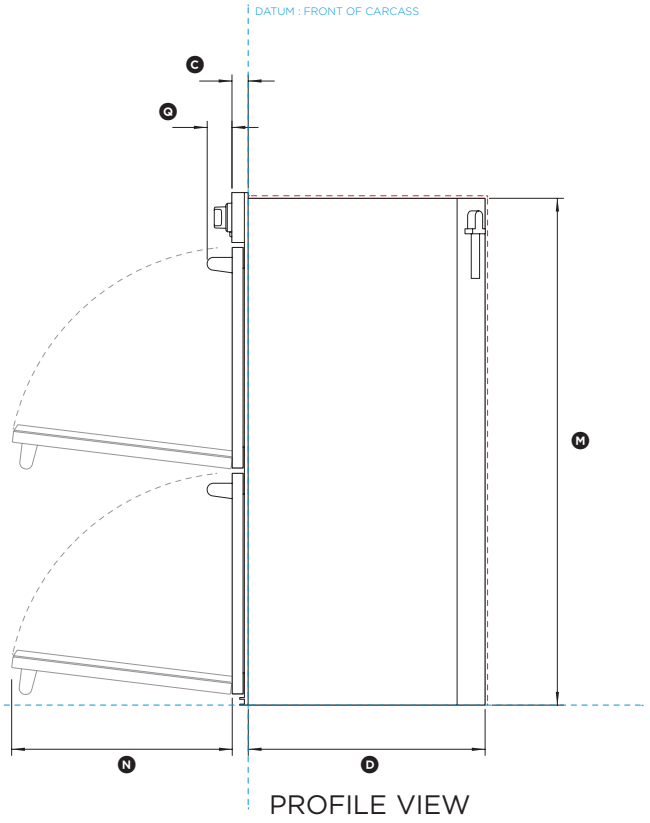

INDICATES PRODUCT DATUM
INDICATES CLEARANCES

DATE: **24.04.2018**

IMPORTANT: Throughout this guide, dimensions may vary by ±2mm (1/16"). Read the installation guide for detailed information on installing the product. For full installation instructions and specifications visit fisherpaykel.com