FISHER & PAYKEL

DATA SHEET
24" Double DishDrawer™ Tall

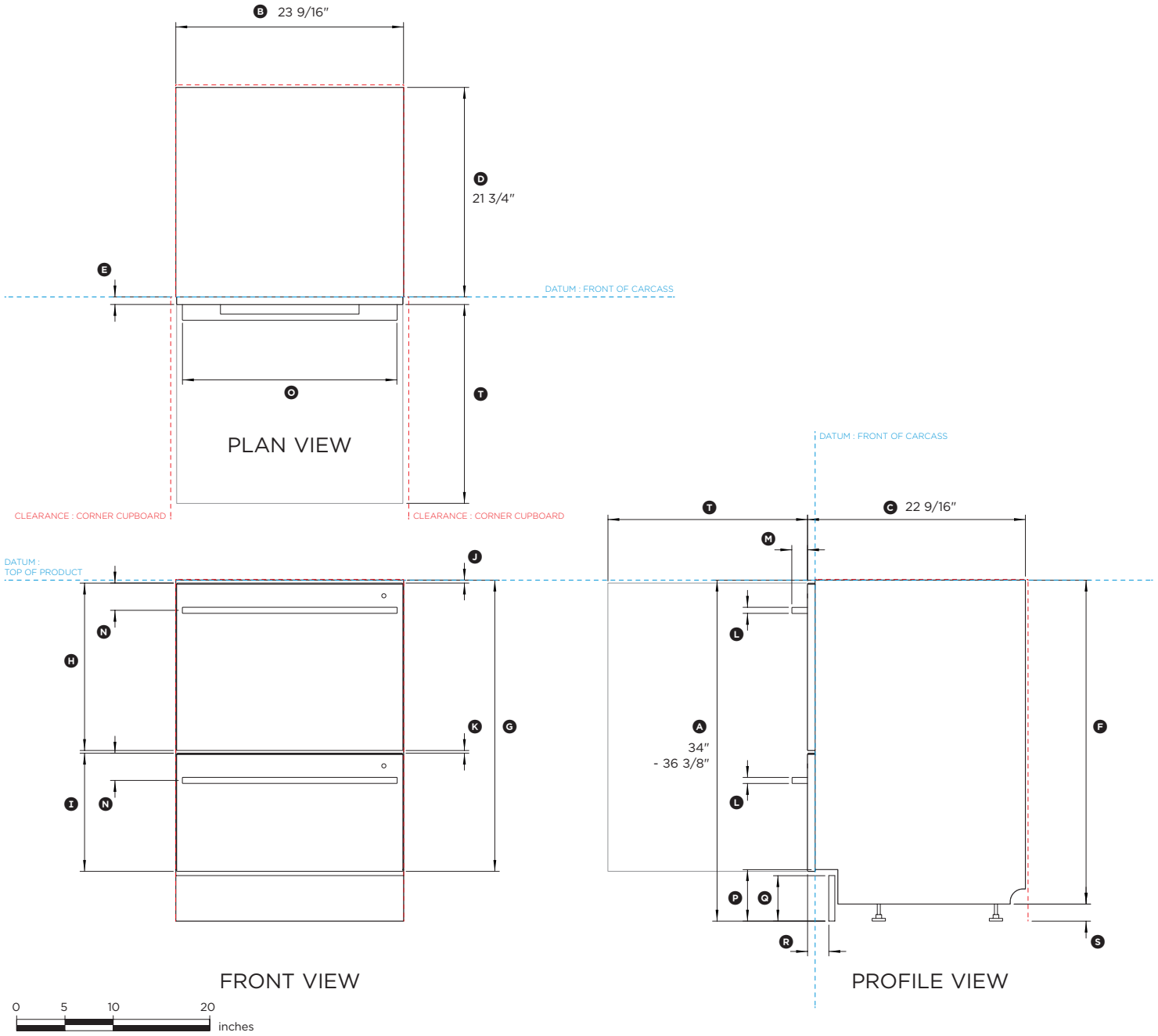

Model no:
DD24DDFTX9_N
(refer page 2 for metric measurements)

Dimensions	**in**
Ⓐ Overall height* of DishDrawer™	34" - 36 3/8"
Ⓑ Overall width of DishDrawer™	23 9/16"
Ⓒ Overall depth of DishDrawer™	22 9/16"
Ⓓ Depth of chassis	21 3/4"
Ⓔ Depth of front panel	13/16"
Ⓕ Height of chassis	33 11/16"
Ⓖ Distance from top datum to bottom of lower drawer front	30 1/4"
Ⓗ Height of upper front drawer panel	17 3/8"
Ⓘ Height of lower front drawer panel	12 1/4"
Ⓙ Height from top of front panel to top of chassis	5/16"
Ⓚ Ventilation gaps between panels	5/16"
Ⓛ Height of handle	5/8"
Ⓜ Depth of handle	1 5/8"
Ⓝ Height from top of upper front panel to centerline of handle	2 13/16"
Ⓞ Width of handle	22 3/16"
Ⓟ Height of toekick recess	4" - 6 5/16"
Ⓠ Height of toekick panel	2 13/16" - 5"
Ⓡ Depth from front of drawer panel to front of toekick (adjustable)	1 1/2" - 4"
Ⓢ Height of adjustable levelling feet	3/8" - 2 3/4"
Ⓣ Maximum extension of drawer from drawer front	20 3/4"

* Includes mounted feet and the range of movement.

Minimum Clearances	**in**
Minimum inside height of cavity*	34"
Minimum inside width of cavity	23 5/8"
Minimum inside depth of cavity from front datum	22 1/16"
Minimum clearance from a corner cupboard	1/2"

* Depending on adjustment of leveling feet.

Note: Service outlet at rear extends both sides, hoses and cords can be routed to either or both.

INDICATES CABINETRY / PRODUCT DATUM ----------
INDICATES CABINETRY CLEARANCES ----------

DATE: **28.05.2018**

IMPORTANT NOTE: Throughout this guide, dimensions may vary by ±2mm (1/16"). Please read the installation manual for detailed information on installing the product. For full installation instructions & specifications visit fisherpaykel.com

FISHER & PAYKEL

DATA SHEET
24" Double DishDrawer™ Tall

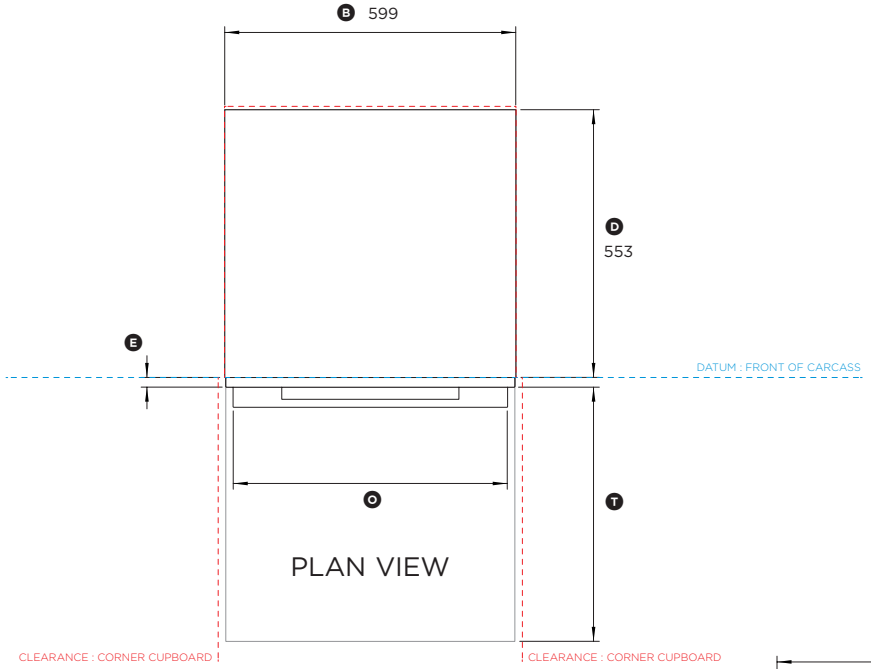

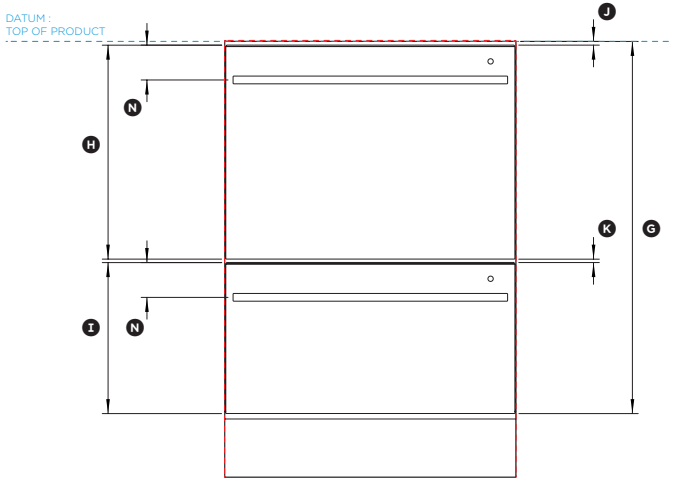

FRONT VIEW

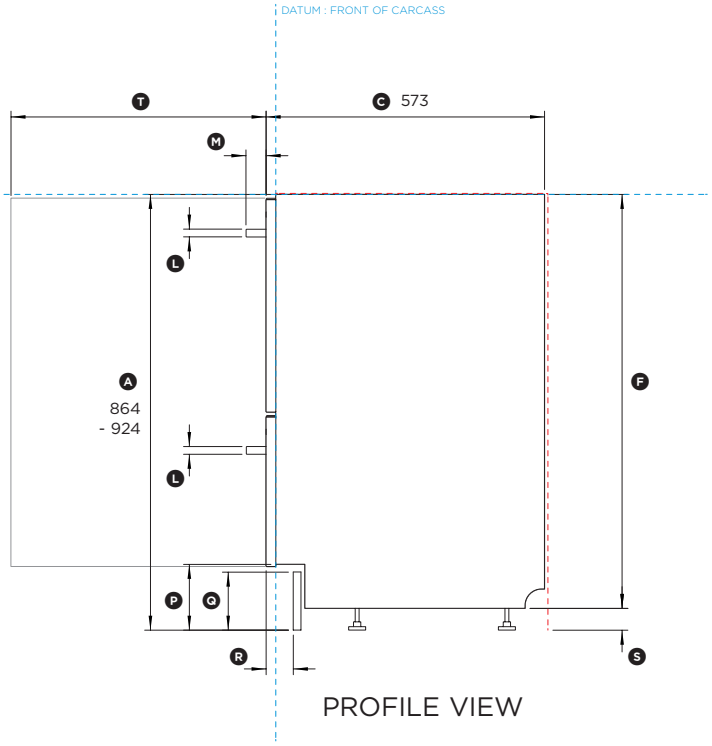

PROFILE VIEW

0 100 200 400
millimetres

Model no:
DD24DDFTX9_N
(refer page 1 for imperial measurements)

Dimensions	**mm**
Ⓐ Overall height* of DishDrawer™	864 – 924
Ⓑ Overall width of DishDrawer™	599
Ⓒ Overall depth of DishDrawer™	573
Ⓓ Depth of chassis	553
Ⓔ Depth of front panel	20
Ⓕ Height of chassis	855
Ⓖ Distance from top datum to bottom of lower drawer front	769
Ⓗ Height of upper front drawer panel	442
Ⓘ Height of lower front drawer panel	312
Ⓙ Height from top of front panel to top of chassis	8
Ⓚ Ventilation gaps between panels	8
Ⓛ Height of handle	16
Ⓜ Depth of handle	41
Ⓝ Height from top of upper front panel to centreline of handle	72
Ⓞ Width of handle	564
Ⓟ Height of toekick recess	100 - 160
Ⓠ Height of toekick panel	72 - 127
Ⓡ Depth from front of drawer panel to front of toekick (adjustable)	38 - 102
Ⓢ Height of adjustable levelling feet	9 - 69
Ⓣ Maximum extension of drawer from drawer front	527

* Includes mounted feet and the range of movement.

Minimum Clearances	**mm**
Minimum inside height of cavity*	864
Minimum inside width of cavity	600
Minimum inside depth of cavity from front datum	560
Minimum clearance from a corner cupboard	13

* Depending on adjustment of leveling feet.

Note: Service outlet at rear extends both sides, hoses and cords can be routed to either or both.

INDICATES CABINETRY / PRODUCT DATUM ----------
INDICATES CABINETRY CLEARANCES ----------

DATE: **28.05.2018**

IMPORTANT NOTE: Throughout this guide, dimensions may vary by ±2mm (1/16"). Please read the installation manual for detailed information on installing the product. For full installation instructions & specifications visit fisherpaykel.com