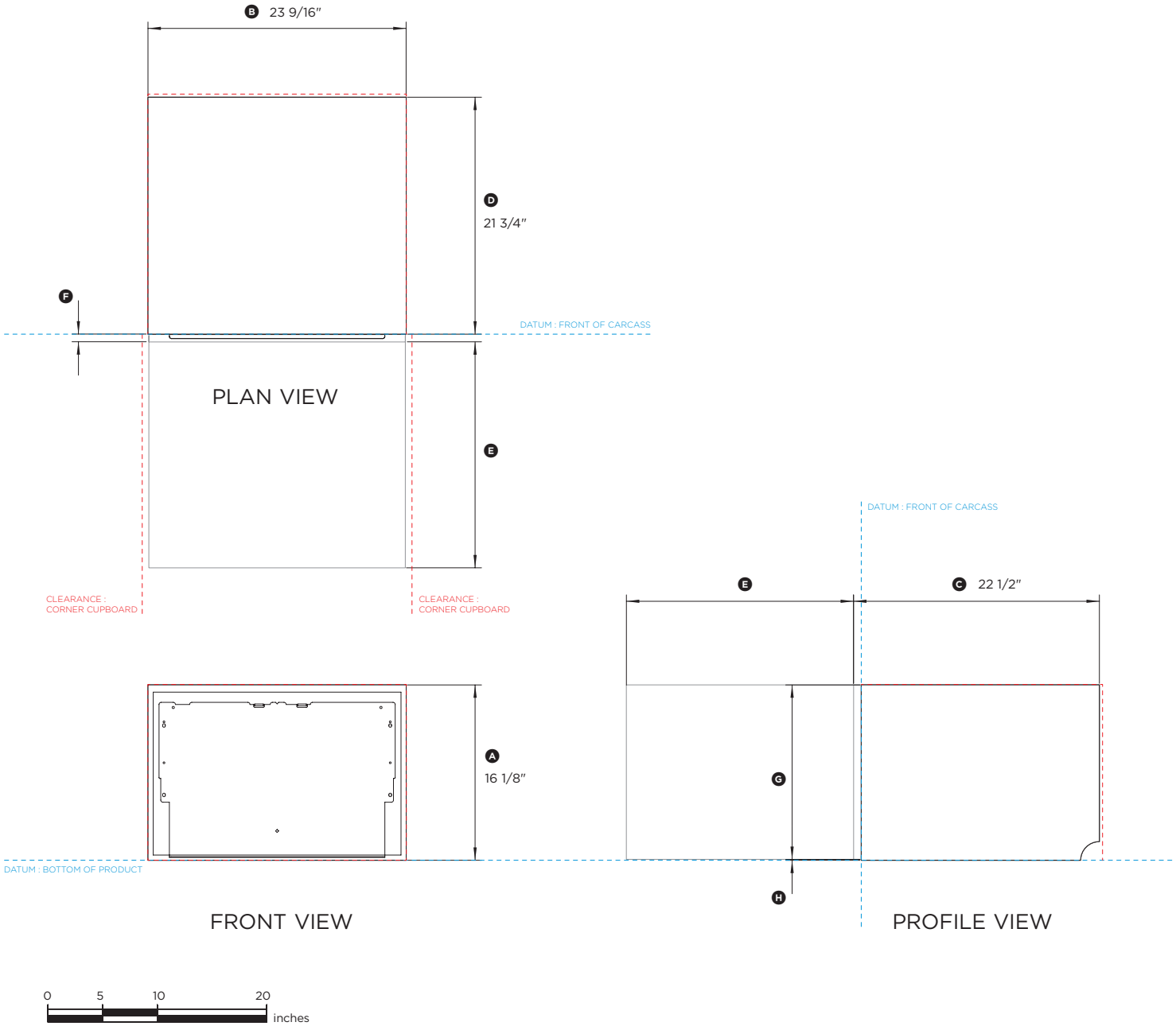

FISHER & PAYKEL

DATA SHEET
24" Single DishDrawer™ Panel Ready

Model no:
DD24SI9_N
(refer page 3 for metric measurements)

Dimensions	**in**
Ⓐ Overall height of DishDrawer™	16 1/8"
Ⓑ Overall width of DishDrawer™	23 9/16"
Ⓒ Overall depth of DishDrawer™ (assuming front panel thickness of 11/16")	22 1/2"
Ⓓ Depth of chassis	21 3/4"
Ⓔ Maximum extension of drawer from drawer front (excluding handle)	20 3/4"
Ⓕ Depth of front panel*	5/8" - 13/16"
Ⓖ Height of front panel (recommended for a 1/16" ventilation gap below panel, if cavity height is 16 1/4")	16 1/16"
Ⓗ Height of ventilation gap below front panel	min 1/16"

* Handle and custom drawer panel not included. To be supplied and fitted by cabinetmaker.

Minimum Clearances	**in**
Height of cavity	min 16 1/4"
Width of cavity	23 5/8"
Depth of cavity	min 22 1/16"
Minimum clearance from a corner cupboard	1/2"

NOTE: If using External Venting Kit and venting into the toekick area, a minimum toekick height of 4" is required to prevent pooling of condensation.

Note: Service outlet at rear extends both sides, hoses and cords can be routed to either or both.

INDICATES CABINETRY / PRODUCT DATUM ----------
INDICATES CABINETRY CLEARANCES ----------

DATE: **28.05.2018**

IMPORTANT NOTE: Throughout this guide, dimensions may vary by ±2mm (1/16"). Please read the installation manual for detailed information on installing the product. For full installation instructions & specifications visit fisherpaykel.com

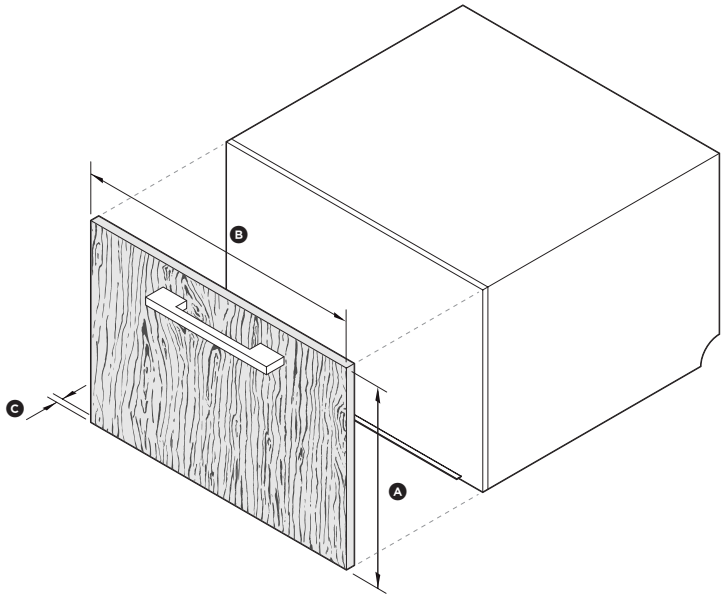

ISO VIEW

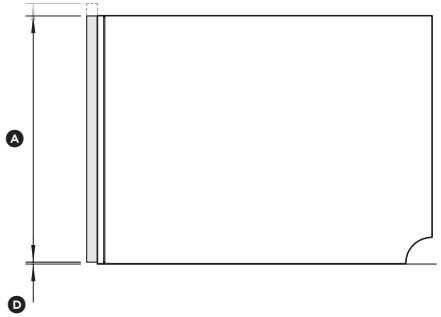

PROFILE VIEW

FISHER & PAYKEL

CUSTOM PANEL PREPARATION
24" Single DishDrawer™ Panel Ready

Model no:
DD24SI9_N
(refer page 4 for metric measurements)

Dimensions	**in**
Ⓐ Minimum height of drawer panel*	16 1/16"
Ⓑ Width of drawer panel	23 7/16" - 24 3/16"
Ⓒ Depth of front panel	5/8" - 13/16"
Ⓓ Minimum height of ventilation gap below front panel	1/16"

Maximum weight of each drawer panel (including handle)	20lb

* For 16 1/4" cavity height and 1/16" ventilation gap below drawer panel with external venting kit installed.
Drawer panel may be extended upwards to fit taller cavity. See installation instructions for full clearance details.

NOTE: If using External Venting Kit and venting into the toekick area, a minimum toekick height of 4" is required to prevent pooling of condensation.

DATE: **28.05.2018**

IMPORTANT NOTE: Throughout this guide, dimensions may vary by ±2mm (1/16"). Please read the installation manual for detailed information on installing the product. For full installation instructions & specifications visit fisherpaykel.com

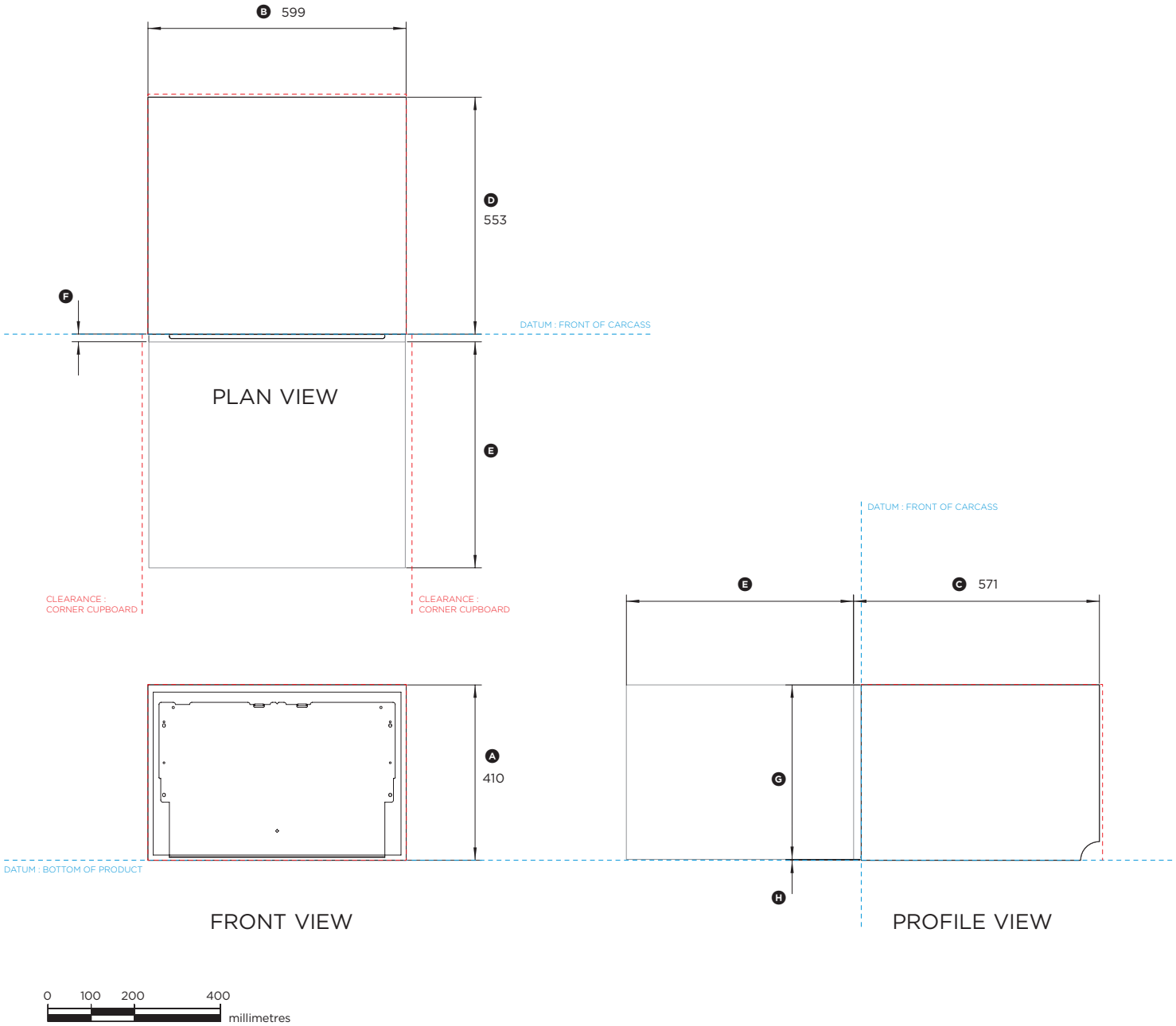

FISHER & PAYKEL

DATA SHEET
24" Single DishDrawer™ Panel Ready

Model no:
DD24SI9_N
(refer page 1 for imperial measurements)

Dimensions	**mm**
Ⓐ Overall height of DishDrawer™	410
Ⓑ Overall width of DishDrawer™	599
Ⓒ Overall depth of DishDrawer™ (assuming front panel thickness of 18mm)	571
Ⓓ Depth of chassis	553
Ⓔ Maximum extension of drawer from drawer front (excluding handle)	527
Ⓕ Depth of front panel*	16-20
Ⓖ Height of front panel (recommended for a 2mm ventilation gap below panel, if cavity height is 412mm)	408
Ⓗ Height of ventilation gap below front panel	min 2

* Handle and custom drawer panel not included. To be supplied and fitted by cabinetmaker.

Minimum Clearances	**mm**
Height of cavity	min 412
Width of cavity	600
Depth of cavity	min 560
Minimum clearance from a corner cupboard	13

NOTE: If using External Venting Kit and venting into the toekick area, a minimum toekick height of 100mm is required to prevent pooling of condensation.

Note: Service outlet at rear extends both sides, hoses and cords can be routed to either or both.

INDICATES CABINETRY / PRODUCT DATUM ----------
INDICATES CABINETRY CLEARANCES ----------

DATE: **28.05.2018**

IMPORTANT NOTE: Throughout this guide, dimensions may vary by ±2mm (1/16"). Please read the installation manual for detailed information on installing the product. For full installation instructions & specifications visit fisherpaykel.com

FISHER & PAYKEL

CUSTOM PANEL PREPARATION
24" Single DishDrawer™ Panel Ready

Model no:
DD24SI9_N
(refer page 2 for imperial measurements)

Dimensions	**mm**
Ⓐ Minimum height of drawer panel*	408
Ⓑ Width of drawer panel	596 - 615
Ⓒ Depth of front panel	16 - 20
Ⓓ Minimum height of ventilation gap below front panel	2

Maximum weight of each drawer panel (including handle)	9 kg

* For 412mm cavity height and 2mm ventilation gap below drawer panel with external venting kit installed.
Drawer panel may be extended upwards to fit taller cavity. See installation instructions for full clearance details.

NOTE: If using External Venting Kit and venting into the toekick area, a minimum toekick height of 100mm is required to prevent pooling of condensation.

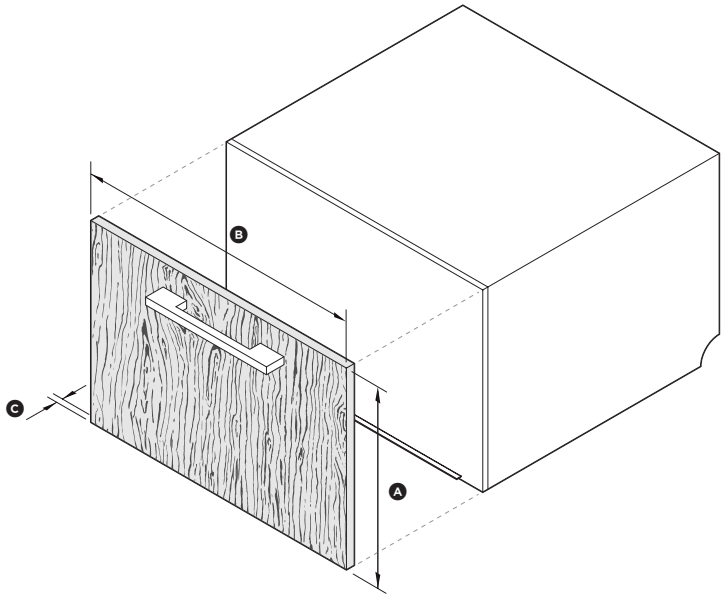

ISO VIEW

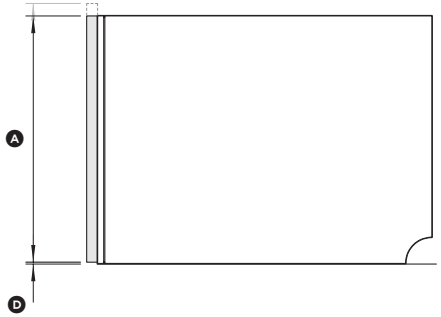

PROFILE VIEW

DATE: **28.05.2018**

IMPORTANT NOTE: Throughout this guide, dimensions may vary by ±2mm (1/16"). Please read the installation manual for detailed information on installing the product. For full installation instructions & specifications visit fisherpaykel.com